DESCRIPTION	REVISIONS	DATE
SIGN MOUNT HT.		9/12/08

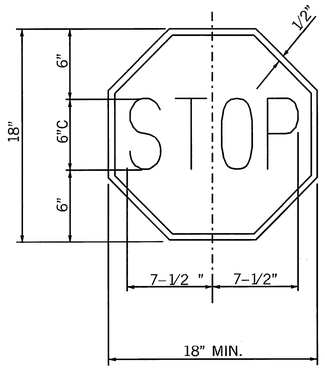

STOP:
LEGEND AND BORDER: WHITE (REFLECTORIZED)
BACKGROUND: RED (REFLECTORIZED)

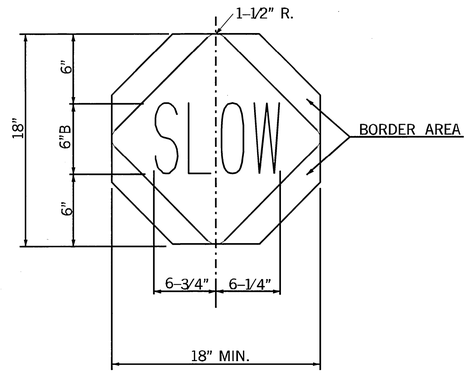

SLOW:
LEGEND AND BORDER AREA: BLACK (NON-REFLECTORIZED)
BACKGROUND: ORANGE (REFLECTORIZED)

STOP-SLOW PADDLE

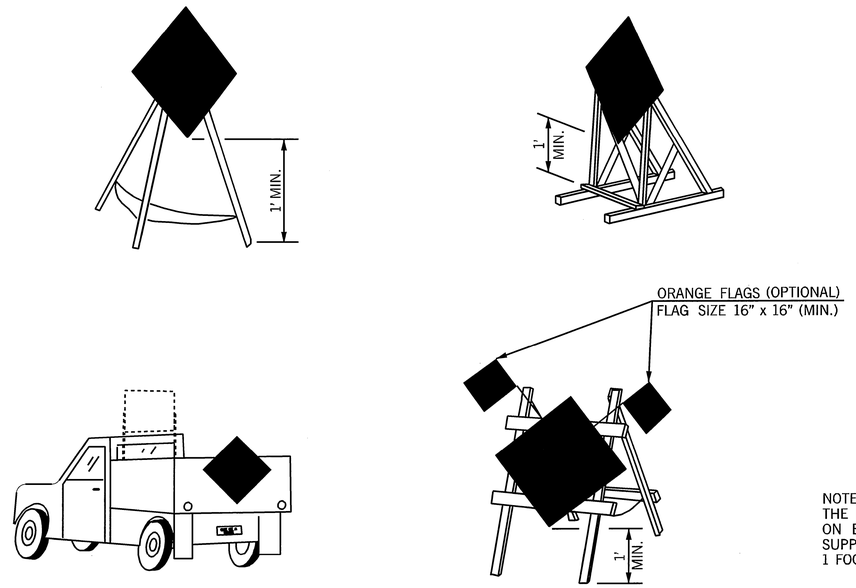

NOTE:
THE BOTTOM OF SIGNS MOUNTED ON BARRICADES OR TEMPORARY SUPPORTS SHALL NOT BE LESS THAN 1 FOOT ABOVE THE TRAVELED WAY.

PORTABLE AND TEMPORARY MOUNTINGS
METHODS OF MOUNTING SIGNS OTHER THAN ON POSTS

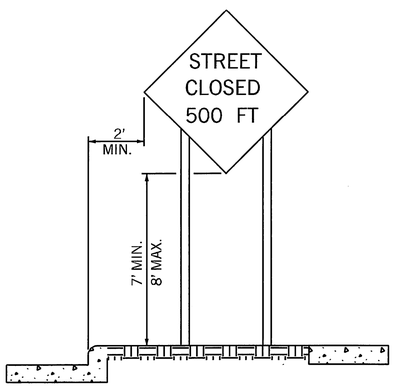

URBAN DISTRICT

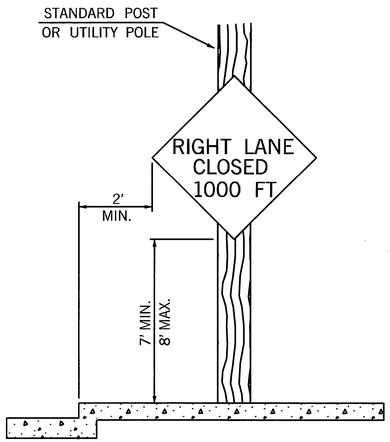

URBAN DISTRICT

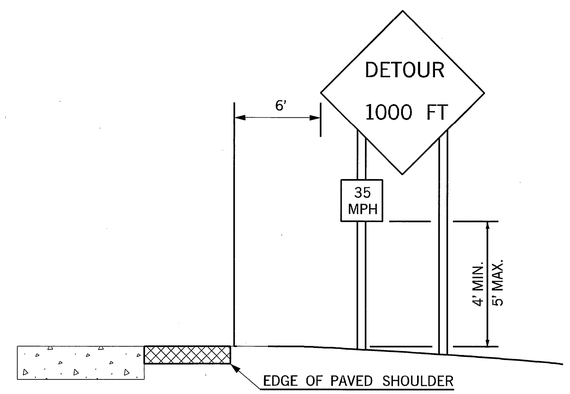

RURAL DISTRICT WITH
ADVISORY SPEED PLATE

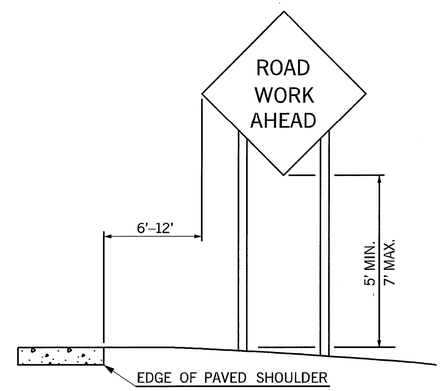

RURAL DISTRICT

HEIGHT AND LATERAL LOCATIONS OF SIGNS – TYPICAL INSTALLATIONS

APPROVED BY TRAFFIC ENGINEER [signature] DATE 9/15/08

OKLAHOMA DEPT. OF TRANSPORTATION
TRAFFIC STANDARD (ENGLISH)
TRAFFIC CONTROL STANDARD
TRAFFIC CONTROL DEVICES

1999 SPECIFICATIONS	TCS5-1	01E
		T-505E

TRPC36 U:\Traffic\TRAFFIC_STD_CURRENT\TRAF_CNTRL\REVISION\T505E_TCS5-1_01E.dgn 9:39:36 AM 9/12/2008