REV. NO.	DESCRIPTION	REVISION DATE
1	REVISE PROJECT NUMBER	04-22-2022

STATE OF OKLAHOMA
DEPARTMENT OF TRANSPORTATION

PLAN OF PROPOSED
INTERCHANGE

1 STATE AID PROJECT NO. SSP-4400(096)PM
OPERATIONAL IMPROVEMENTS FOR ONE (1)
INDEPENDENT SYSTEM -TO- SYSTEM INTERCHANGE
I-44 / US-169
TULSA COUNTY
CONTROL SECTION NO. 44-72-78, 169-72-81, 169-72-83
STATE JOB NO. 10981(05)
BRIDGE 'A' - NBI NO. 32255 (NEW)

DESIGN DATA

	RAMP 'B'	RAMP 'D'	RAMP 'E'
ADT 2020	750	14,090	2,650
ADT 2050	1,050	20,070	3,800
DHV (1-WAY)	NA	NA	NA
K (DHV/ADT)	NA	NA	NA
D	NA	NA	NA
T (% DHV)	5 %	5 %	5 %
T (% ADT)	8 %	8 %	8 %
T3(% ADT)	3 %	3 %	3 %
V	25 MPH	25-50 MPH	25 MPH
20yr Rigid ESALS		6.8 M	

	RAMP 'F'	RAMP 'G'	RAMP 'H'
ADT 2020	750	14,090	13,010
ADT 2050	1,050	20,070	15,950
DHV (1-WAY)	NA	NA	NA
K (DHV/ADT)	NA	NA	NA
D	NA	NA	NA
T (% DHV)	5 %	5 %	5 %
T (% ADT)	8 %	8 %	8 %
T3(% ADT)	3 %	3 %	3 %
V	25-50 MPH	40-50 MPH	25 MPH
20yr Rigid ESALS		6.8 M	
3yr Flex ESALS(Detour)		< 3 M	

INDEX OF SHEETS

SEE SHEET 0002

SUMMARY OF RAMP LENGTHS

LENGTH BASED ON ℄ OF RAMPS		
RAMP 'B'	1,113.60	FT
RAMP 'D'	2,262.17	FT
RAMP 'E'	1,145.87	FT
RAMP 'F'	327.72	FT
RAMP 'G'	3,466.34	FT
RAMP 'H'	746.95	FT
TOTAL	9,062.65	FT

SURVEY DATA

See Survey Data Sheets for Survey Control Data

MANDATORY TIE:

THIS PROJECT IS MANDATORILY TIED WITH STATE JOB PIECE NO. 33448(04) AND SHALL BE BID ACCORDINLY.

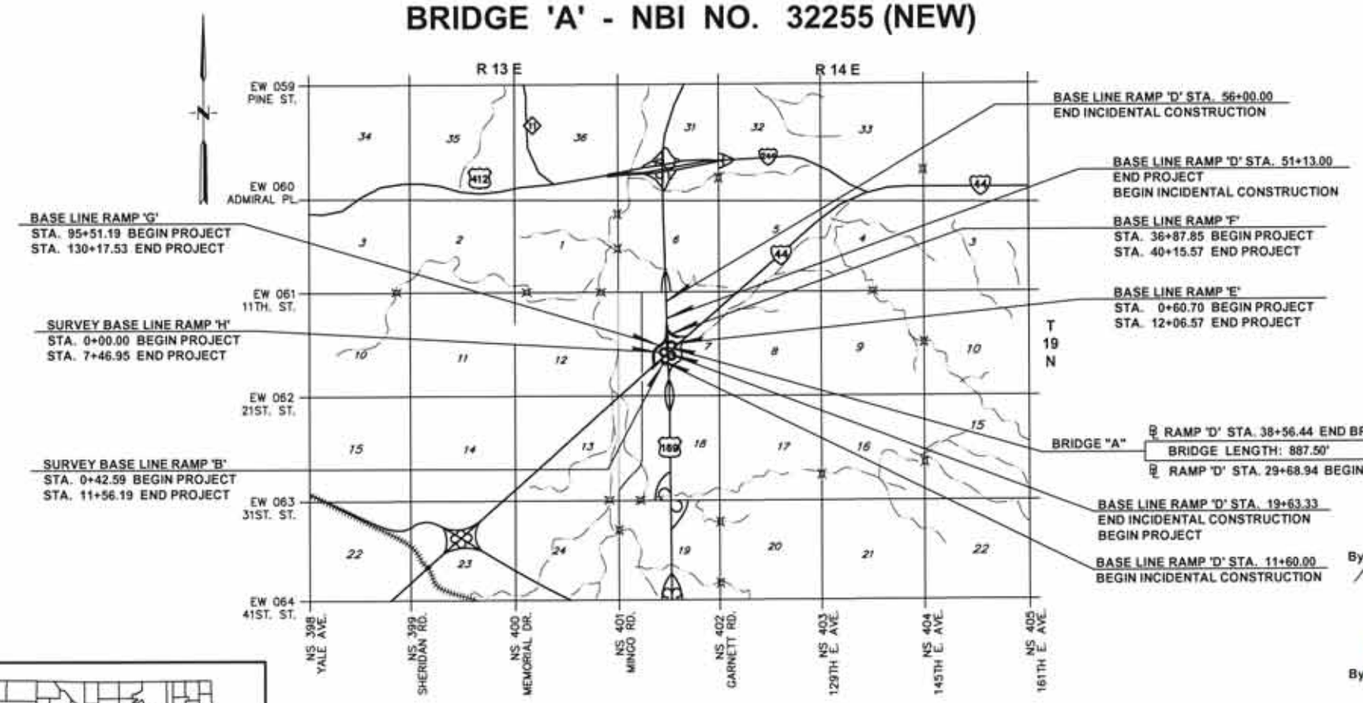

SCALES

Plan	1:50'
Profile Horizontal	1:50'
Profile Vertical	1:10'
Layout Map	1" = 1 Mile

CONVENTIONAL SYMBOLS

- Proposed Roads
- Railroads
- Township and Range Lines
- Section Lines
- Quarter-section Lines
- Fence
- Ground Line
- Existing Roads
- Base Lines
- Grade Lines
- Telephone & Telegraph Line
- Power Lines
- Oil Wells
- Buildings
- Drainage Structures - Existing
- Drainage Structures - New
- Present R/W — Right-of-Way Lines - Existing
- R/W — Right-of-Way Lines - New
- Controlled Access
- Right-of-Way Fence

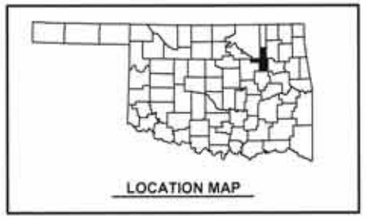

LOCATION MAP

PROJECT LENGTH BASED ON ℄ OF RAMP 'D'

ROADWAY LENGTH	2262.17	FT	0.428	MI.
BRIDGE LENGTH	887.50	FT	0.168	MI.
PROJECT LENGTH			0.596	MI.
EQUATIONS			NONE	
EXCEPTIONS			NONE	

PREPARED BY:

CRAIG & KEITHLINE, INC.
6940 S. Utica Avenue
Tulsa, Oklahoma 74136
(918) 743 - 6611

By Kevin A. Kriewall Date 4/22/22
Kevin A. Kriewall, P.E.
Oklahoma Reg. No. 14850
REGISTERED PROFESSIONAL ENGINEER KEVIN A. KRIEWALL 14850 OKLAHOMA

By Robin D Sewell Date 4/22/22
Robin D. Sewell, P.E.
Oklahoma Reg. No. 16173
REGISTERED PROFESSIONAL ENGINEER ROBIN D SEWELL 16173 OKLAHOMA

Craig & Keithline, Inc.
Oklahoma Certificate of Authorization No. 1216
Renewal Date - June 30, 2022

OKLAHOMA DEPARTMENT OF TRANSPORTATION	DEPARTMENT OF TRANSPORTATION FEDERAL HIGHWAY ADMINISTRATION
DATE APPROVED :	DATE APPROVED :
BY	BY
CHIEF ENGINEER	DIVISION ADMINISTRATOR

2019 OKLAHOMA STANDARD SPECIFICATIONS FOR HIGHWAY CONSTRUCTION GOVERN. APPROVED BY THE U.S. DEPARTMENT OF TRANSPORTATION, FEDERAL HIGHWAY ADMINISTRATION, DECEMBER 18, 2019.

BRIDGE
PROJECT MANAGER
SQUAD
CHECKED BY
DATE

ROADWAY
PROJECT MANAGER CRAIG & KEITHLINE, INC.
SQUAD CRAIG & KEITHLINE, INC.
CHECKED BY
DATE

INDEX OF SHEETS

SHEET No.	DESCRIPTION
0001	TITLE SHEET
0002	INDEX OF SHEETS AND TRAFFIC DATA
0003–0011	TYPICAL SECTION
AB01–AB02	GENERAL NOTES AND SUMMARY OF PAY QUANTITIES (BRIDGE)
AE01	ENVIRONMENTAL NOTES
AR01	PAY QUANTITIES AND NOTES (ROADWAY)
AR02	PAY QUANTITY AND GENERAL NOTES (ROADWAY)
AT01	TRAFFIC PAY QUANTITIES AND NOTES (SIGNING AND STRIPING)
AT02	TRAFFIC PAY QUANTITIES AND NOTES (TRAFFIC CONTROL)
AT03	LIGHTING PAY QUANTITIES AND NOTES
AX01–AX03	SUMMARY SHEET (ROADWAY)
B001–B003	GENERAL PLAN AND ELEVATION – BRIDGE "N"
B004–B009	SUBSURFACE PROFILE
B010–B011	SUBSTRUCTURE LAYOUT
B012–B017	ABUTMENT DETAILS
B018–B025	PIER DETAILS
B026–B046	SUBSTRUCTURE DETAILS
B047–B048	APPROACH SLAB DETAILS
B049	SLOPE WALL DETAILS
M001–M007	MONOTUBE STRUCTURE DETAILS
R001	STORM WATER MANAGEMENT PLAN
R002	DRAINAGE MAP
R003–R007	EROSION CONTROL DETAILS
R008–R013	PLAN SHEETS
R014–R016	PROFILE RAMP D
R017	PROFILE RAMP F
R018	PROFILE RAMP B & H
R019	PROFILE RAMP E
R020–R021	PROFILE RAMP G
R022	GEOMETRICS
R023–R026	PAVING PLAN AND DETAILS
R027–R031	REMOVAL PLAN
R032	PIER PROTECTION DETAILS PIER 2, PIER 3, & PIER 4
R033	PIER PROTECTION DETAILS ALONG RAMP 'B' AND RAMP 'E'
R034–R035	DRAINAGE DETAILS
R036	INLET–LONGITUDINAL BARRIER – TYPE I
R037	CONSTRUCTION SEQUENCE OVERVIEW
R038–R040	PHASE 1 CONSTRUCTION
R041	BARRIER WALL DETAILS AT MONOTUBE STRUCTURE

SHEET No.	DESCRIPTION
RW01	RETAINING WALL 'A' PLAN AND ELEVATION
RW02	RETAINING WALL 'B' PLAN AND ELEVATION
RW03–RW05	RETAINING WALL 'C' PLAN AND ELEVATION
RW06–RW07	MSE RETAINING WALL SECTIONS
RW08	MSE RETAINING WALL DETAILS
RW09	MSE RETAINING WALL NOTES
RW10–RW11	SOIL BORINGS
S001–S027	SURVEY DATA SHEETS
T001	SUMMARY OF SIGNS
T002–T007	SIGNING & STRIPING (6 EACH)
T008	SPECIAL SIGNS DETAILS
T009	MONOTUBE STRUCTURE PLAN
T010	MONOTUBE STRUCTURE SIGN LAYOUT DETAILS
T011	US169/I44 65 MPH LANE REDUCTION
T012–T014	PHASE II, III, IV DETOUR PLAN (3 EACH)
T015–T023	ADVANCE WARNING SUGGESTED TRAFFIC (9 EACH)
T024	LIGHTING SCHEDULES
T025	LIGHTING MODIFICATION PLAN
T026	LIGHTING & SIGNING MODIFICATION PLAN
T027	UNDERPASS LUMINAIRE DETAILS
X001–X007	RAMP B CROSS SECTIONS
X008–X022	RAMP D CROSS SECTIONS
X023–X028	RAMP E CROSS SECTIONS
X029–X031	RAMP F CROSS SECTIONS
X032–X049	RAMP G CROSS SECTIONS
X050–X054	RAMP H CROSS SECTIONS

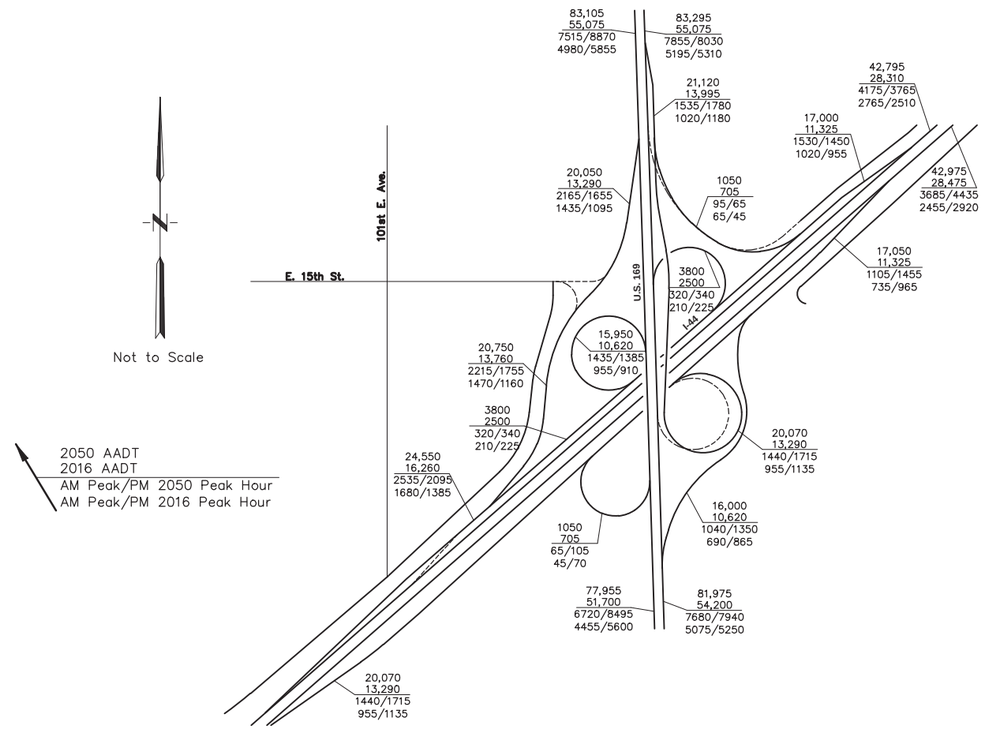

TRAFFIC DATA

INTERCHANGE (OPERATIONAL IMPROVEMENTS)
I–144/US–169

ROADWAY(2019 Stds.)

SSS–2–0	PSE–2–0	SPI–5–1
TSC2–4–0	PCES–5–0	SPB–2–1
TSD–3–0	SMD–4–1	FHTCP–4–0
TFL–2–0	GPI–5–1	PUD–4–0
CSCD–6–1	SSCD–4–0	CLB–2–1
LECS–5–1	CI–2–1	DC–4–0
LTU–5–0	SSIF–5–0	PDT–2–0
PR–4–0	CIG–4–0	SUEL1–4–0
PCPR–4–1	MFC–5–0	SUEL3–4–0
PED–4–0	MJB–4–1	

TRAFFIC(2009 Stds.)

PM1–1–03	MSD2–1–00	GMS1–1–00	TCS4–1–01	TCS17–1–00	CCD1–1–00	UPD1–1–00
PM2–1–01	MSD3–1–01	GMS2–1–01	TCS5–1–00	TCS18–1–01	CCD2–1–00	SPD1–1–00
PM3–1–02	MSD4–1–00	SSP1–1–02	TCS6–1–02	TCS19–1–01	PBD1–1–00	SCD1–1–00
PM4–1–02	MSD5–1–00	SSA1–1–00	TCS7–1–02	TCS20–1–00	GMF1–2–00	TEWD1–2–00
PM6–1–00	SIS2–1–00	SSA2–1–00	TCS8–1–00	TCS21–1–02	BMF1–2–00	HMF1–1–00
MOD1–1–00	SIS4–1–00	FGS2–1–01	TCS9–1–01	TCS22–1–00	BMF2–2–00	HMP1–1–00
RSD1–1–00	SBS1–1–00	SPA1–1–00	TCS10–1–00	TCS24–1–02	BMF3–2–00	HMLD1–1–00
RSD2–1–00	SBS2–1–00	TSSP1–1–00	TCS11–1–01	TCS25–1–00	PPD1–2–00	
WSD1–1–00	SBS3–1–00	SWD1–1–00	TCS12–1–00	THRI–1–02	HLD1–2–01	
WSD2–1–00	SBS4–1–00	TCS1–1–01	TCS13–1–00	GA31–1–00	HLD2–2–01	
WSD3–1–00	SBS5–1–00	TCS2–1–00	TCS14–1–00	GHW1–1–00	HLMA3–1–01	
MSD1–1–00	SBS6–1–00	TCS3–1–01	TCS15–1–00	GHW2–1–00		

BRIDGE(2009 Stds.)

EJ–SK–04E
EJ–DTL–02E
HP1–2–01E
FSHP–42–2–00E

REGISTERED PROFESSIONAL ENGINEER
RODNEY D. SEWELL
16173
OKLAHOMA
9/17/21

Design	CKS	
Drawn	CKD	
Checked	CKE	
Approved		
Squad	C & K	

INTERCHANGE (OPERATIONAL IMPROVEMENTS) TULSA COUNTY

INDEX OF SHEETS, STANDARD DRAWINGS AND TRAFFIC DATA

JOB PIECE NO. 10981(05) SHEET NO. 0002

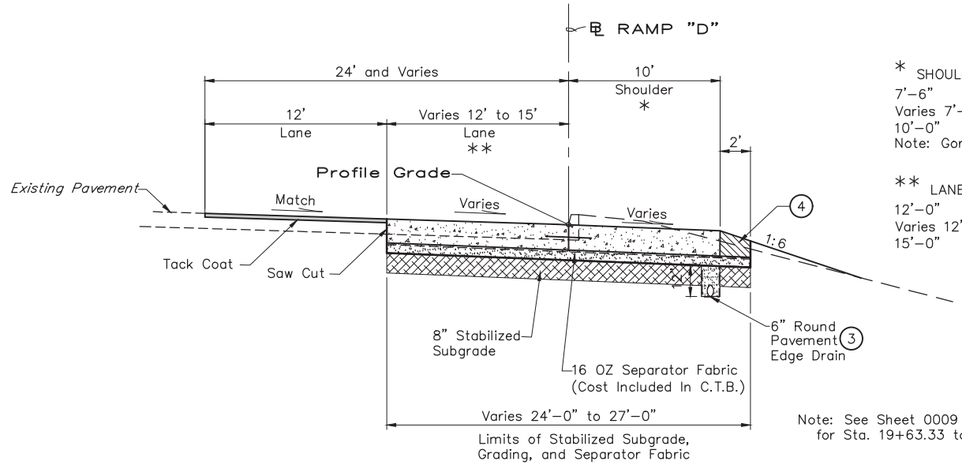

* SHOULDER WIDTHS:

7'-6"	Sta. 19+63.33 to Sta. 20+08.99
Varies 7'-6" to 10'-0"	Sta. 20+08.99 to Sta. 20+52.99
10'-0"	Sta. 20+52.99 to Sta 21+46.08

Note: Gore Area Not Shown. See Paving Plan & Details.

** LANE WIDTHS:

12'-0"	Sta. 19+63.33 to Sta. 20+52.99
Varies 12'-0" to 15'-0"	Sta. 20+52.99 to Sta. 21+36.99
15'-0"	Sta. 21+36.99 to Sta 21+46.08

Note: See Sheet 0009 Typical Section 17 for Sta. 19+63.33 to Sta. 19+79.66

TYPICAL SECTION 1 — RAMP "D"

RAMP "D" STA. 19+79.66 TO STA. 21+46.08

PAVEMENT REQUIREMENT			
13" PAVEMENT STRUCTURE	EXISTING PAVEMENT MILL AND OVERLAY	12'-0" WEAVE LANE	10'-0" OUTSIDE SHOULDER
SURFACE COURSE	1 1/2" SUPERPAVE, TYPE S4 (PG 76-28 OK)	9" DOWEL JOINTED P.C. CONCRETE	9" PLAIN JOINTED P.C. CONCRETE
BASE COURSE	NA	4" CEMENT TREATED BASE	4" CEMENT TREATED BASE

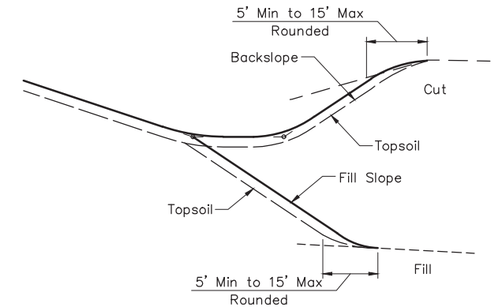

TOP OF CUT — TOE OF FILL ROUNDING DETAIL

INTERSECTION OF CUT AND FILL SLOPES WITH THE GROUND LINE ARE TO BE ROUNDED AS A PART OF THE FINISHING OPERATIONS. ROUNDING SHALL BE 5' MINIMUM FOR SMALLER CUTS AND FILLS, TO 15' MAXIMUM FOR LARGER CUTS AND FILLS OR AS DESIGNATED BY THE ENGINEER. COST OF ROUNDING TO BE INCLUDED IN THE PRICE BID FOR OTHER ITEMS OF WORK.

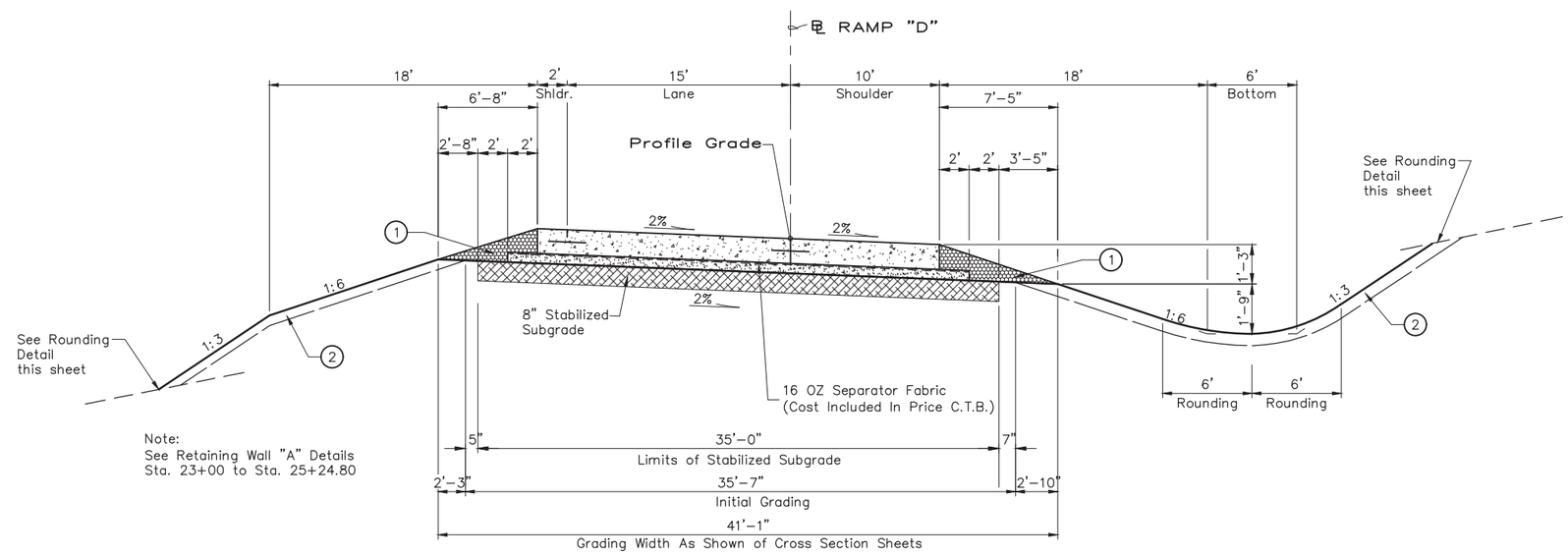

TYPICAL SECTION 2 — RAMP "D"

STA. 21+46.08 TO STA. 22+62.99
STA. 25+28.99 TO STA. 28+50.99

PAVEMENT REQUIREMENT			
13" PAVEMENT STRUCTURE	2'-0" INSIDE SHOULDER	15'-0" DRIVING LANE	10'-0" OUTSIDE SHOULDER
SURFACE COURSE	9" DOWELL JOINTED P.C. CONCRETE	9" DOWELL JOINTED P.C. CONCRETE	9" PLAIN JOINTED P.C. CONCRETE
BASE COURSE	4" CEMENT TREATED BASE	4" CEMENT TREATED BASE	4" CEMENT TREATED BASE

(1) BACKFILL NOTE:
THIS AREA TO BE BACKFILLED WITH TBSC TYPE "E" AND COMPACTED AS PART OF THE FINISHING OPERATIONS IN A MANNER APPROVED BY THE ENGINEER.

(2) TOPSOIL NOTE:
THE CONTRACTOR SHALL STRIP ALL OF THE AVAILABLE TOPSOIL, STOCKPILE IT, AND PLACE IT BACK ON THE SECTION IN ACCORDANCE WITH SECTION 205 OF THE STANDARD SPECIFICATION. RESERVED TOPSOIL SHALL BE SPREAD FIRST ON THE COMPLETED SLOPES OF THE CUT SECTIONS AND THE REMAINDER ON COMPLETED FILL SLOPES OR OTHER PRIORITY AREAS LOCATED BY THE ENGINEER. ALL ADDITIONAL COSTS ASSOCIATED WITH OPERATIONS SHALL BE INCLUDED IN THE PAY ITEM SALVAGED TOPSOIL, LUMP SUM.

THE GRADING LINE AS SHOWN ON THE TYPICAL AND CROSS SECTIONS IS TO THE TOP OF THE TOPSOIL EARTHWORK. QUANTITIES WERE NOT ADJUSTED FOR SALVAGE AND THE TOPSOIL QUANTITY IS INCLUDED IN THE MASS LINE BALANCE.

(3) PAVEMENT EDGE DRAIN : PROVIDE OUTLET LATERALS AT 300' ON CENTER MAXIMUM SPACING OR CONNECT TO NEAREST DRAINAGE STRUCTURE. SEE ODOT STD. PED-4

(4) BACKFILL NOTE:
THIS AREA TO BE BACKFILLED AND COMPACTED AS PART OF THE FINISHING OPERATIONS. COST TO BE INCLUDED IN OTHER ITEMS OF WORK.

REGISTERED PROFESSIONAL ENGINEER
ROBERT D. SEWELL
16173
OKLAHOMA
9/17/21

Survey	CKS	INTERCHANGE (OPERATIONAL IMPROVEMENTS) TULSA COUNTY
Drawn	CKD	TYPICAL SECTION
Checked	CKE	
Approved		
Squad	C & K	JOB PIECE NO. 10981(05) SHEET NO. 0003

S:\Projects\ODOT\2015 EC-1710 I-44-169 Interchange\ACAD\PS&E\Plans\0003-1098105-Typicals Section.dwg, 11x17, 9/17/2021 3:07:28 PM

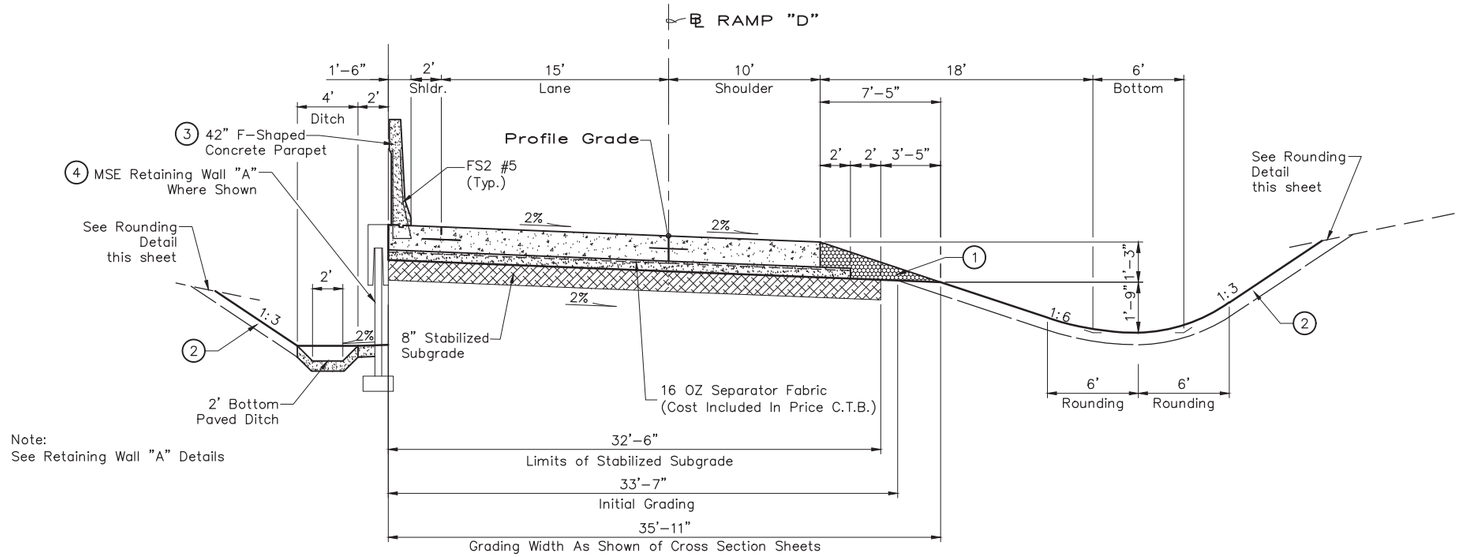

Note:
See Retaining Wall "A" Details

TYPICAL SECTION 3 — RAMP "D"

STA. 22+62.99 TO STA. 25+28.99

PAVEMENT REQUIREMENT			
13" PAVEMENT STRUCTURE	2'-0" INSIDE SHOULDER	15'-0" DRIVING LANE	10'-0" OUTSIDE SHOULDER
SURFACE COURSE	9" DOWELL JOINTED P.C. CONCRETE	9" DOWELL JOINTED P.C. CONCRETE	9" PLAIN JOINTED P.C. CONCRETE
BASE COURSE	4" CEMENT TREATED BASE	4" CEMENT TREATED BASE	4" CEMENT TREATED BASE

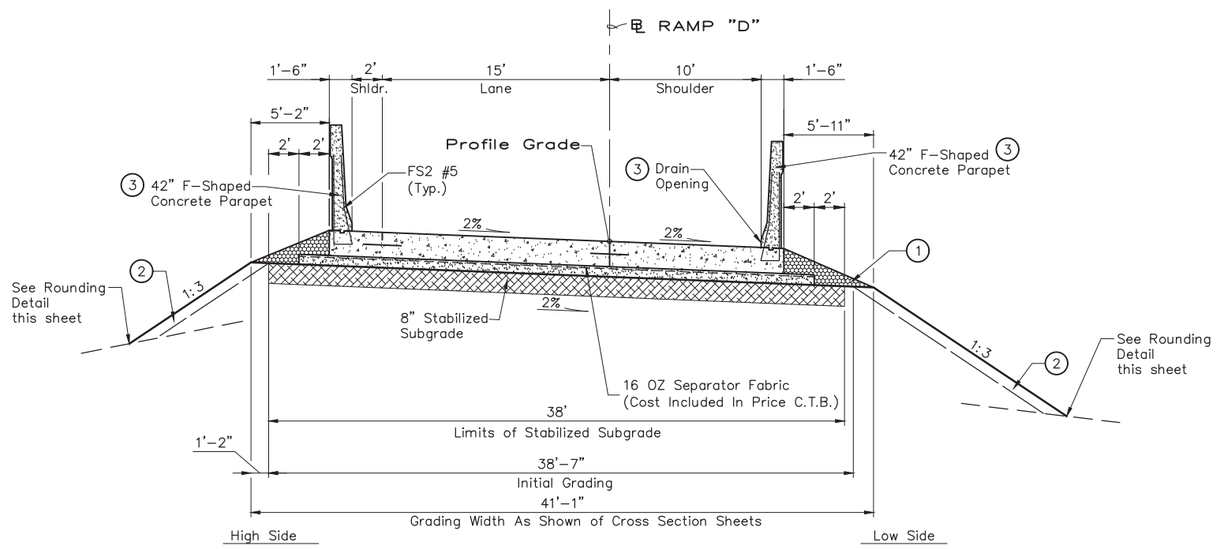

TYPICAL SECTION 4 — RAMP "D"
WITH 42" F-SHAPED PARAPET

STA. 28+50.99 TO STA. 29+35.00
STA. 38+85.00 TO STA. 40+09.84

PAVEMENT REQUIREMENT			
13" PAVEMENT STRUCTURE	2'-0" INSIDE SHOULDER	15'-0" DRIVING LANE	10'-0" OUTSIDE SHOULDER
SURFACE COURSE	9" DOWELL JOINTED P.C. CONCRETE	9" DOWELL JOINTED P.C. CONCRETE	9" PLAIN JOINTED P.C. CONCRETE
BASE COURSE	4" CEMENT TREATED BASE	4" CEMENT TREATED BASE	4" CEMENT TREATED BASE

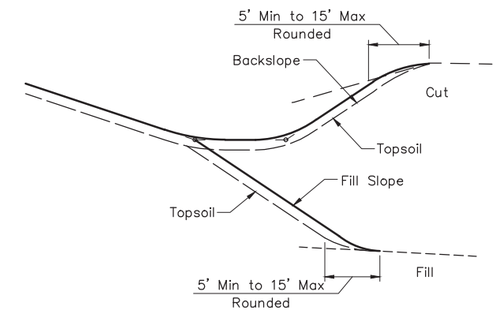

TOP OF CUT — TOE OF FILL ROUNDING DETAIL

INTERSECTION OF CUT AND FILL SLOPES WITH THE GROUND LINE ARE TO BE ROUNDED AS A PART OF THE FINISHING OPERATIONS. ROUNDING SHALL BE 5' MINIMUM FOR SMALLER CUTS AND FILLS, TO 15' MAXIMUM FOR LARGER CUTS AND FILLS OR AS DESIGNATED BY THE ENGINEER. COST OF ROUNDING TO BE INCLUDED IN THE PRICE BID FOR OTHER ITEMS OF WORK.

1. BACKFILL NOTE:
THIS AREA TO BE BACKFILLED WITH TBSC TYPE "E" AND COMPACTED AS PART OF THE FINISHING OPERATIONS IN A MANNER APPROVED BY THE ENGINEER.

2. TOPSOIL NOTE:
THE CONTRACTOR SHALL STRIP ALL OF THE AVAILABLE TOPSOIL, STOCKPILE IT, AND PLACE IT BACK ON THE SECTION IN ACCORDANCE WITH SECTION 205 OF THE STANDARD SPECIFICATION. RESERVED TOPSOIL SHALL BE SPREAD FIRST ON THE COMPLETED SLOPES OF THE CUT SECTIONS AND THE REMAINDER ON COMPLETED FILL SLOPES OR OTHER PRIORITY AREAS LOCATED BY THE ENGINEER. ALL ADDITIONAL COSTS ASSOCIATED WITH OPERATIONS SHALL BE INCLUDED IN THE PAY ITEM SALVAGED TOPSOIL, LUMP SUM.

THE GRADING LINE AS SHOWN ON THE TYPICAL AND CROSS SECTIONS IS TO THE TOP OF THE TOPSOIL EARTHWORK. QUANTITIES WERE NOT ADJUSTED FOR SALVAGE AND THE TOPSOIL QUANTITY IS INCLUDED IN THE MASS LINE BALANCE.

3. SEE SHEET 0010 FOR SLAB REINFORCING DETAILS.
PROVIDE 5'-0" DRAIN OPENINGS AT 10' CENTERS WHERE SHOWN.
SEE STANDARD FSHP-42-2 FOR DETAILS.

4. MECHANICALLY STABILIZED EARTH (MSE) WALLS SHALL BE THE RESPONSIBILITY OF THE CONTRACTOR AND SHALL BE DESIGNED BY A REGISTERED PROFESSIONAL ENGINEER IN THE STATE OF OKLAHOMA IN ACCORDANCE WITH THE FIFTH EDITION, 2010 AASHTO LFRD DESIGN SPECIFICATIONS AND CURRENT INTERIMS. DESIGN CALCULATIONS AND DRAWINGS SHALL BE SUBMITTED TO ODOT BRIDGE DIVISION FOR APPROVAL PRIOR TO CONSTRUCTION. SEE MSE NOTES.

REGISTERED PROFESSIONAL ENGINEER ROBERT D. SEWELL 16173 OKLAHOMA
9/17/21

Survey	CKS	INTERCHANGE (OPERATIONAL IMPROVEMENTS) TULSA COUNTY
Drawn	CKD	TYPICAL SECTION
Checked	CKE	
Approved		
Squad	C & K	JOB PIECE NO. 10981(05) SHEET NO. 0004

S:\Projects\ODOT\2015 EC-1710 I-44-169 Interchange\ACAD\PS&E\Plans\0004-1098105-Typicals Section.dwg, 11x17, 9/17/2021 3:07:32 PM

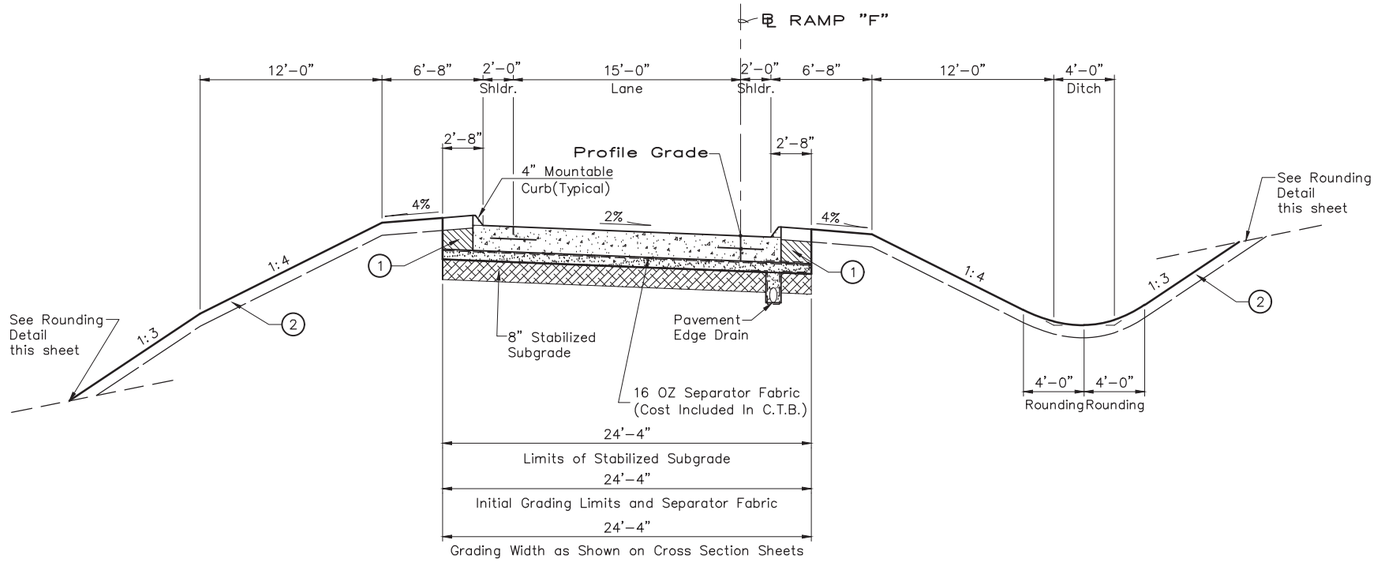

TYPICAL SECTION 5 — RAMP "F"

STA. 36+87.85 TO STA. 37+50.00

PAVEMENT REQUIREMENT			
13" PAVEMENT STRUCTURE	2'-0" INSIDE SHOULDER	15'-0" DRIVING LANE	2'-0" OUTSIDE SHOULDER
SURFACE COURSE	9" DOWEL JOINTED P.C. CONCRETE	9" DOWEL JOINTED P.C. CONCRETE	9" DOWEL JOINTED P.C. CONCRETE
BASE COURSE	4" CEMENT TREATED BASE	4" CEMENT TREATED BASE	4" CEMENT TREATED BASE

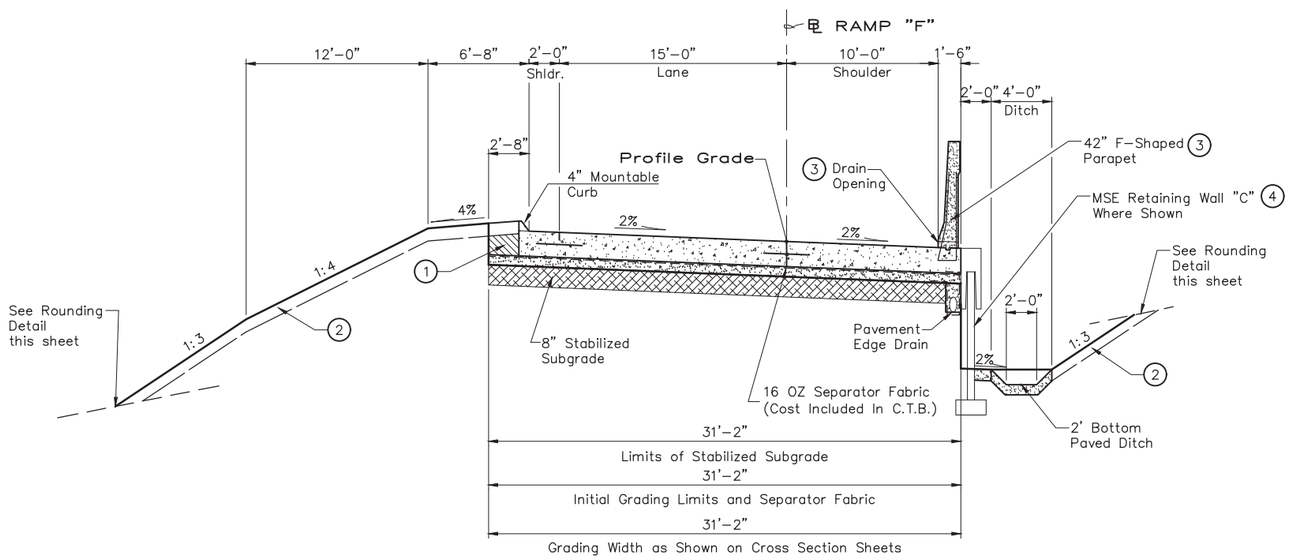

TYPICAL SECTION 6 — RAMP "F"

STA. 37+50.00 TO STA. 40+15.57

PAVEMENT REQUIREMENT			
13" PAVEMENT STRUCTURE	2'-0" INSIDE SHOULDER	15'-0" DRIVING LANE	10'-0" OUTSIDE SHOULDER
SURFACE COURSE	9" DOWEL JOINTED P.C. CONCRETE	9" DOWEL JOINTED P.C. CONCRETE	9" PLAIN JOINTED P.C. CONCRETE
BASE COURSE	4" CEMENT TREATED BASE	4" CEMENT TREATED BASE	4" CEMENT TREATED BASE

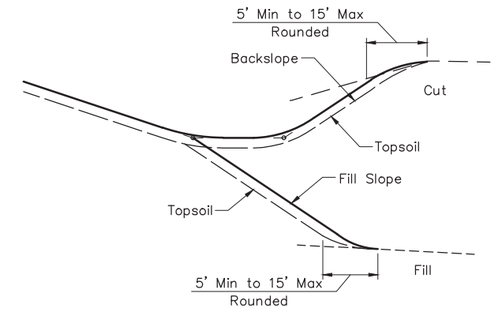

TOP OF CUT — TOE OF FILL ROUNDING DETAIL

INTERSECTION OF CUT AND FILL SLOPES WITH THE GROUND LINE ARE TO BE ROUNDED AS A PART OF THE FINISHING OPERATIONS. ROUNDING SHALL BE 5' MINIMUM FOR SMALLER CUTS AND FILLS, TO 15' MAXIMUM FOR LARGER CUTS AND FILLS OR AS DESIGNATED BY THE ENGINEER. COST OF ROUNDING TO BE INCLUDED IN THE PRICE BID FOR OTHER ITEMS OF WORK.

(1) BACKFILL NOTE:
THIS AREA TO BE BACKFILLED AND COMPACTED AS PART OF THE FINISHING OPERATIONS. COST TO BE INCLUDED IN OTHER ITEMS OF WORK.

(2) TOPSOIL NOTE:
THE CONTRACTOR SHALL STRIP ALL OF THE AVAILABLE TOPSOIL, STOCKPILE IT, AND PLACE IT BACK ON THE SECTION IN ACCORDANCE WITH SECTION 205 OF THE STANDARD SPECIFICATION. RESERVED TOPSOIL SHALL BE SPREAD FIRST ON THE COMPLETED SLOPES OF THE CUT SECTIONS AND THE REMAINDER ON COMPLETED FILL SLOPES OR OTHER PRIORITY AREAS LOCATED BY THE ENGINEER. ALL ADDITIONAL COSTS ASSOCIATED WITH OPERATIONS SHALL BE INCLUDED IN THE PAY ITEM SALVAGED TOPSOIL, LUMP SUM.

THE GRADING LINE AS SHOWN ON THE TYPICAL AND CROSS SECTIONS IS TO THE TOP OF THE TOPSOIL EARTHWORK. QUANTITIES WERE NOT ADJUSTED FOR SALVAGE AND THE TOPSOIL QUANTITY IS INCLUDED IN THE MASS LINE BALANCE.

(3) SEE SHEET 0010 FOR SLAB REINFORCING DETAILS.
PROVIDE 5'-0" DRAIN OPENINGS AT 10' CENTERS WHERE SHOWN. SEE STANDARD FSHP-42-2 FOR DETAILS.

(4) MECHANICALLY STABILIZED EARTH (MSE) WALLS SHALL BE THE RESPONSIBILITY OF THE CONTRACTOR AND SHALL BE DESIGNED BY A REGISTERED PROFESSIONAL ENGINEER IN THE STATE OF OKLAHOMA IN ACCORDANCE WITH THE FIFTH EDITION, 2010 AASHTO LFRD DESIGN SPECIFICATIONS AND CURRENT INTERIMS. DESIGN CALCULATIONS AND DRAWINGS SHALL BE SUBMITTED TO ODOT BRIDGE DIVISION FOR APPROVAL PRIOR TO CONSTRUCTION. SEE MSE NOTES.

Survey	CKS	INTERCHANGE (OPERATIONAL IMPROVEMENTS) TULSA COUNTY
Drawn	CKD	**TYPICAL SECTION**
Checked	CKE	
Approved		
Squad	C & K	JOB PIECE NO. 10981(05) SHEET NO. 0005

S:\Projects\ODOT\2015 EC-1710 I-44-169 Interchange\ACAD\PS&E\Plans\0005-1098105-Typicals Section.dwg, 11x17, 9/17/2021 3:07:37 PM

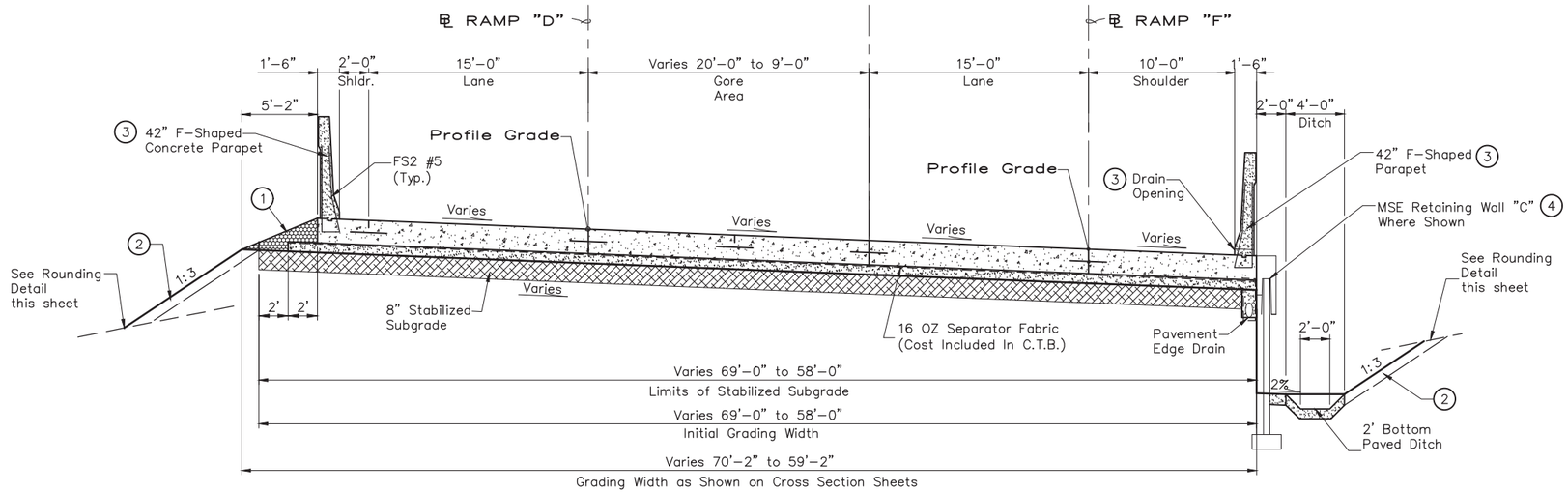

TYPICAL SECTION 7 — RAMP "D" & "F" MERGE

STA. 40+09.84 TO STA. 40+76.84 RAMP "D"
STA. 40+15.57 TO STA. 40+79.88 RAMP "F"

PAVEMENT REQUIREMENT					
13" PAVEMENT STRUCTURE	2'-0" INSIDE SHOULDER	15'-0" DRIVING LANE	VARIABLE WIDTH GORE AREA	15'-0" DRIVING LANE	10'-0" OUTSIDE SHOULDER
SURFACE COURSE	9" DOWELL JOINTED P.C. CONCRETE	9" DOWELL JOINTED P.C. CONCRETE	9" PLAIN JOINTED P.C. CONCRETE	9" DOWELL JOINTED P.C. CONCRETE	9" PLAIN JOINTED P.C. CONCRETE
BASE COURSE	4" CEMENT TREATED BASE	4" CEMENT TREATED BASE	4" CEMENT TREATED BASE	4" CEMENT TREATED BASE	4" CEMENT TREATED BASE

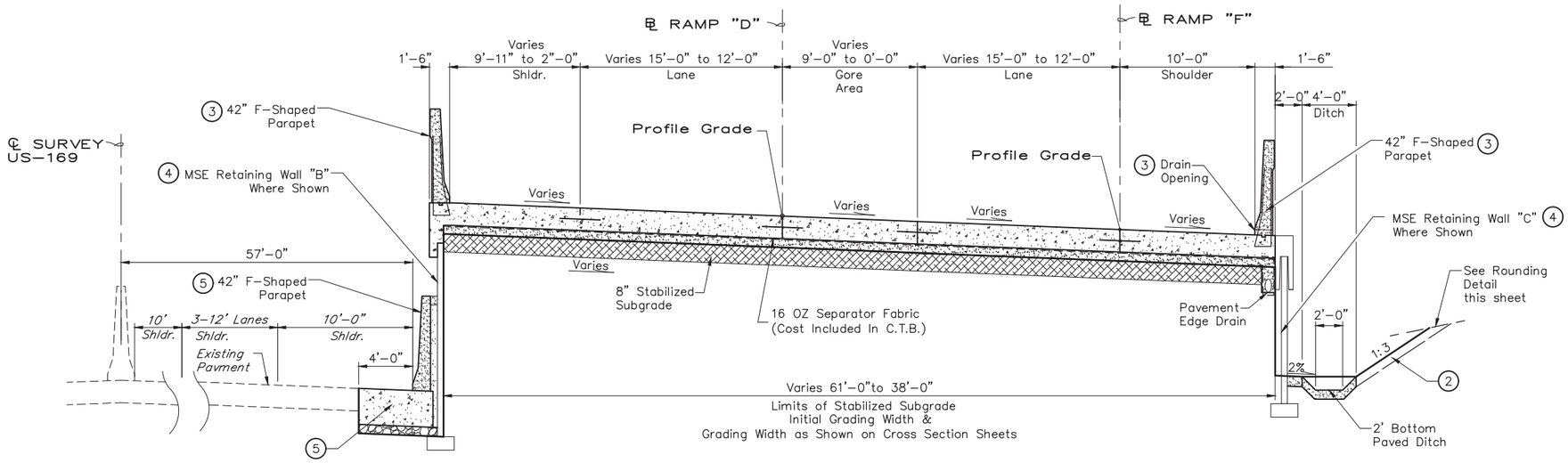

TYPICAL SECTION 8 — RAMP "D" & "F" MERGE

STA. 40+76.84 TO STA. 42+25.17 RAMP "D"
STA. 40+79.88 TO STA. 42+25.86 RAMP "F"

PAVEMENT REQUIREMENT					
13" PAVEMENT STRUCTURE	VARIABLE WIDTH INSIDE SHOULDER	VARIABLE WIDTH DRIVING LANE	VARIABLE WIDTH GORE AREA	VARIABLE WIDTH DRIVING LANE	10'-0" OUTSIDE SHOULDER
SURFACE COURSE	9" DOWELL JOINTED P.C. CONCRETE	9" DOWELL JOINTED P.C. CONCRETE	9" PLAIN JOINTED P.C. CONCRETE	9" DOWELL JOINTED P.C. CONCRETE	9" PLAIN JOINTED P.C. CONCRETE
BASE COURSE	4" CEMENT TREATED BASE	4" CEMENT TREATED BASE	4" CEMENT TREATED BASE	4" CEMENT TREATED BASE	4" CEMENT TREATED BASE

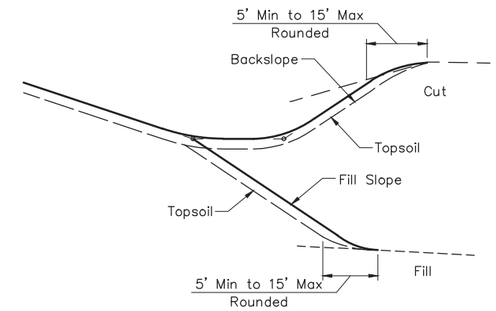

TOP OF CUT — TOE OF FILL ROUNDING DETAIL

INTERSECTION OF CUT AND FILL SLOPES WITH THE GROUND LINE ARE TO BE ROUNDED AS A PART OF THE FINISHING OPERATIONS. ROUNDING SHALL BE 5' MINIMUM FOR SMALLER CUTS AND FILLS, TO 15' MAXIMUM FOR LARGER CUTS AND FILLS OR AS DESIGNATED BY THE ENGINEER. COST OF ROUNDING TO BE INCLUDED IN THE PRICE BID FOR OTHER ITEMS OF WORK.

1. BACKFILL NOTE:
THIS AREA TO BE BACKFILLED WITH TBSC TYPE "E" AND COMPACTED AS PART OF THE FINISHING OPERATIONS IN A MANNER APPROVED BY THE ENGINEER.

2. TOPSOIL NOTE:
THE CONTRACTOR SHALL STRIP ALL OF THE AVAILABLE TOPSOIL, STOCKPILE IT, AND PLACE IT BACK ON THE SECTION IN ACCORDANCE WITH SECTION 205 OF THE STANDARD SPECIFICATION. RESERVED TOPSOIL SHALL BE SPREAD FIRST ON THE COMPLETED SLOPES OF THE CUT SECTIONS AND THE REMAINDER ON COMPLETED FILL SLOPES OR OTHER PRIORITY AREAS LOCATED BY THE ENGINEER. ALL ADDITIONAL COSTS ASSOCIATED WITH OPERATIONS SHALL BE INCLUDED IN THE PAY ITEM SALVAGED TOPSOIL, LUMP SUM.

THE GRADING LINE AS SHOWN ON THE TYPICAL AND CROSS SECTIONS IS TO THE TOP OF THE TOPSOIL EARTHWORK. QUANTITIES WERE NOT ADJUSTED FOR SALVAGE AND THE TOPSOIL QUANTITY IS INCLUDED IN THE MASS LINE BALANCE.

3. SEE SHEET 0010 FOR SLAB REINFORCING DETAILS.
PROVIDE 5'-0" DRAIN OPENINGS AT 10' CENTERS WHERE SHOWN.
SEE STANDARD FSHP-42-2 FOR DETAILS.

4. MECHANICALLY STABILIZED EARTH (MSE) WALLS SHALL BE THE RESPONSIBILITY OF THE CONTRACTOR AND SHALL BE DESIGNED BY A REGISTERED PROFESSIONAL ENGINEER IN THE STATE OF OKLAHOMA IN ACCORDANCE WITH THE FIFTH EDITION, 2010 AASHTO LFRD DESIGN SPECIFICATIONS AND CURRENT INTERIMS. DESIGN CALCULATIONS AND DRAWINGS SHALL BE SUBMITTED TO ODOT BRIDGE DIVISION FOR APPROVAL PRIOR TO CONSTRUCTION. SEE MSE NOTES.

5. SEE TYPICAL SECTION 20, SHEET 0010 FOR DETAILS

REGISTERED PROFESSIONAL ENGINEER RODNEY D. SEWELL 16173 OKLAHOMA
9/17/21

Survey	CKS		INTERCHANGE (OPERATIONAL IMPROVEMENTS) TULSA COUNTY
Drawn	CKD		**TYPICAL SECTION**
Checked	CKE		
Approved			
Squad	C & K		JOB PIECE NO. 10981(05) SHEET NO. 0006

S:\Projects\ODOT\2015 EC-1710 I-44-169 Interchange\ACAD\PS&E\Plans\0006-1098105-Typicals Section.dwg, 11x17, 9/17/2021 3:07:42 PM

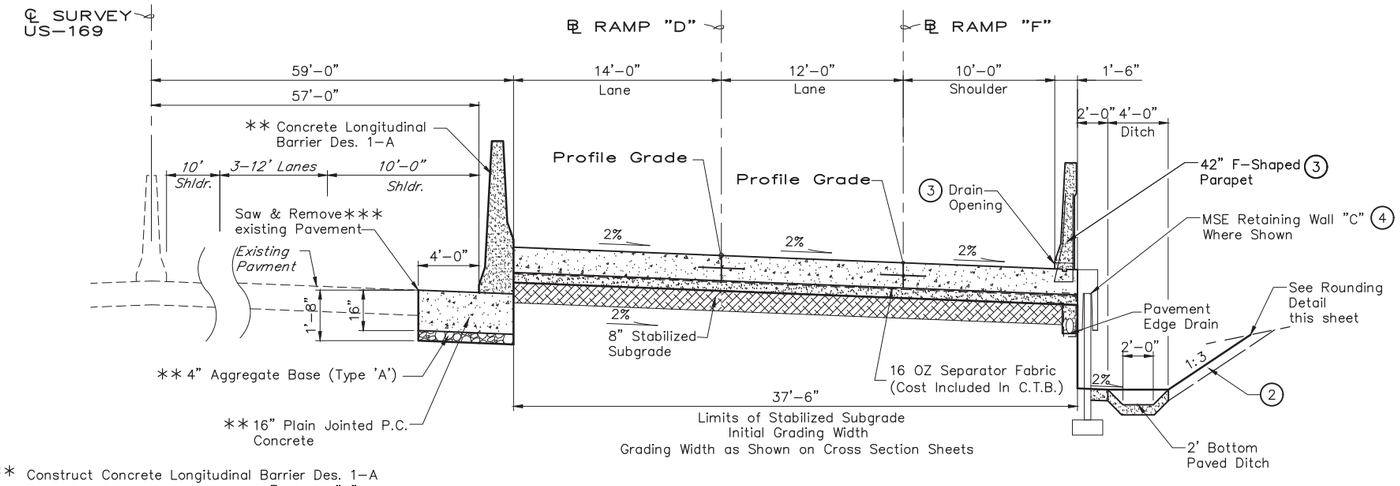

** Construct Concrete Longitudinal Barrier Des. 1-A Sta. 42+24.17 to Sta. 43+73.50 ℄ Ramp "D"

*** Saw and Remove Pavement Sta. 43+73.50 to Sta. 44+18.00 ℄ Ramp "D".

TYPICAL SECTION 9 — RAMP "D" & "F" MERGE

STA. 42+25.17 TO STA. 44+18.00 RAMP "D"
STA. 42+25.86 TO STA. 44+17.88 RAMP "F"

PAVEMENT REQUIREMENT				
13" PAVEMENT STRUCTURE	2'-0" INSIDE SHOULDER	12' DRIVING LANE	12' DRIVING LANE	10'-0" OUTSIDE SHOULDER
SURFACE COURSE	9" DOWELL JOINTED P.C. CONCRETE	9" DOWELL JOINTED P.C. CONCRETE	9" DOWELL JOINTED P.C. CONCRETE	9" PLAIN JOINTED P.C. CONCRETE
BASE COURSE	4" CEMENT TREATED BASE	4" CEMENT TREATED BASE	4" CEMENT TREATED BASE	4" CEMENT TREATED BASE

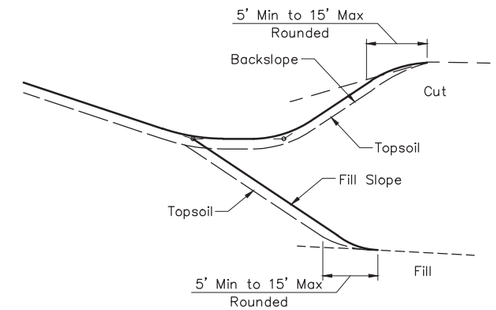

TOP OF CUT — TOE OF FILL ROUNDING DETAIL

INTERSECTION OF CUT AND FILL SLOPES WITH THE GROUND LINE ARE TO BE ROUNDED AS A PART OF THE FINISHING OPERATIONS. ROUNDING SHALL BE 5' MINIMUM FOR SMALLER CUTS AND FILLS, TO 15' MAXIMUM FOR LARGER CUTS AND FILLS OR AS DESIGNATED BY THE ENGINEER. COST OF ROUNDING TO BE INCLUDED IN THE PRICE BID FOR OTHER ITEMS OF WORK.

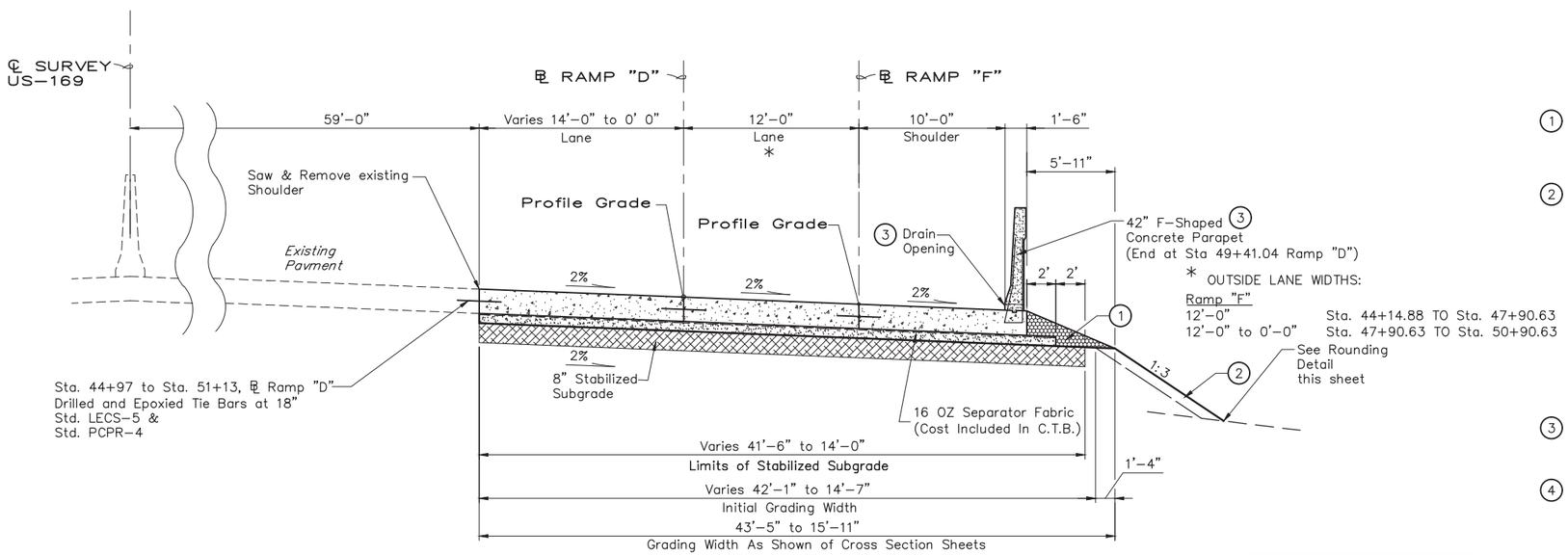

* OUTSIDE LANE WIDTHS:

Ramp "F"	
12'-0"	Sta. 44+14.88 TO Sta. 47+90.63
12'-0" to 0'-0"	Sta. 47+90.63 TO Sta. 50+90.63

1. BACKFILL NOTE:
THIS AREA TO BE BACKFILLED WITH TBSC TYPE "E" AND COMPACTED AS PART OF THE FINISHING OPERATIONS IN A MANNER APPROVED BY THE ENGINEER.

2. TOPSOIL NOTE:
THE CONTRACTOR SHALL STRIP ALL OF THE AVAILABLE TOPSOIL, STOCKPILE IT, AND PLACE IT BACK ON THE SECTION IN ACCORDANCE WITH SECTION 205 OF THE STANDARD SPECIFICATION. RESERVED TOPSOIL SHALL BE SPREAD FIRST ON THE COMPLETED SLOPES OF THE CUT SECTIONS AND THE REMAINDER ON COMPLETED FILL SLOPES OR OTHER PRIORITY AREAS LOCATED BY THE ENGINEER. ALL ADDITIONAL COSTS ASSOCIATED WITH OPERATIONS SHALL BE INCLUDED IN THE PAY ITEM SALVAGED TOPSOIL, LUMP SUM.

THE GRADING LINE AS SHOWN ON THE TYPICAL AND CROSS SECTIONS IS TO THE TOP OF THE TOPSOIL EARTHWORK. QUANTITIES WERE NOT ADJUSTED FOR SALVAGE AND THE TOPSOIL QUANTITY IS INCLUDED IN THE MASS LINE BALANCE.

3. SEE SHEET 0010 FOR SLAB REINFORCING DETAILS.
PROVIDE 5'-0" DRAIN OPENINGS AT 10' CENTERS WHERE SHOWN. SEE STANDARD FSHP-42-2 FOR DETAILS.

4. MECHANICALLY STABILIZED EARTH (MSE) WALLS SHALL BE THE RESPONSIBILITY OF THE CONTRACTOR AND SHALL BE DESIGNED BY A REGISTERED PROFESSIONAL ENGINEER IN THE STATE OF OKLAHOMA IN ACCORDANCE WITH THE FIFTH EDITION, 2010 AASHTO LFRD DESIGN SPECIFICATIONS AND CURRENT INTERIMS. DESIGN CALCULATIONS AND DRAWINGS SHALL BE SUBMITTED TO ODOT BRIDGE DIVISION FOR APPROVAL PRIOR TO CONSTRUCTION. SEE MSE NOTES.

TYPICAL SECTION 10 — RAMP "D" & "F" MERGE

STA. 44+18.00 TO STA. 51+13.00 RAMP "D"
STA. 44+17.88 TO STA. 50+90.63 RAMP "F"

PAVEMENT REQUIREMENT			
13" PAVEMENT STRUCTURE	DRIVING LANE	12' DRIVING LANE	10'-0" OUTSIDE SHOULDER
SURFACE COURSE	9" DOWELL JOINTED P.C. CONCRETE	9" DOWELL JOINTED P.C. CONCRETE	9" PLAIN JOINTED P.C. CONCRETE
BASE COURSE	4" CEMENT TREATED BASE	4" CEMENT TREATED BASE	4" CEMENT TREATED BASE

REGISTERED PROFESSIONAL ENGINEER ROBERT D. SEWELL 16173 OKLAHOMA 9/17/21

Survey	CKS	INTERCHANGE (OPERATIONAL IMPROVEMENTS)	TULSA COUNTY
Drawn	CKD	TYPICAL SECTION	
Checked	CKE		
Approved			
Squad	C & K	JOB PIECE NO. 10981(05)	SHEET NO. 0007

S:\Projects\ODOT\2015 EC-1710 I-44-169 Interchange\ACAD\PS&E\Plans\0007-1098105-Typicals Section.dwg, 11x17, 9/17/2021 3:07:47 PM

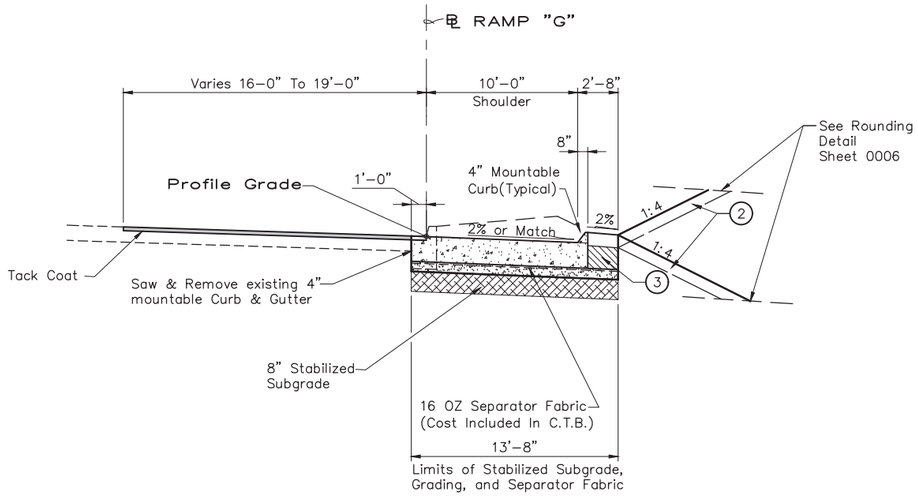

TYPICAL SECTION 11 — RAMP "G"

STA. 95+51.19 TO STA. 96+65.00

PAVEMENT REQUIREMENT		
13" PAVEMENT STRUCTURE	EXISTING PAVEMENT MILL AND OVERLAY	10'–0" OUTSIDE SHOULDER
SURFACE COURSE	1 1/2" SUPERPAVE, TYPE S4 (PG 76–28 OK)	9" PLAIN JOINTED P.C. CONCRETE
BASE COURSE	NA	4" CEMENT TREATED BASE

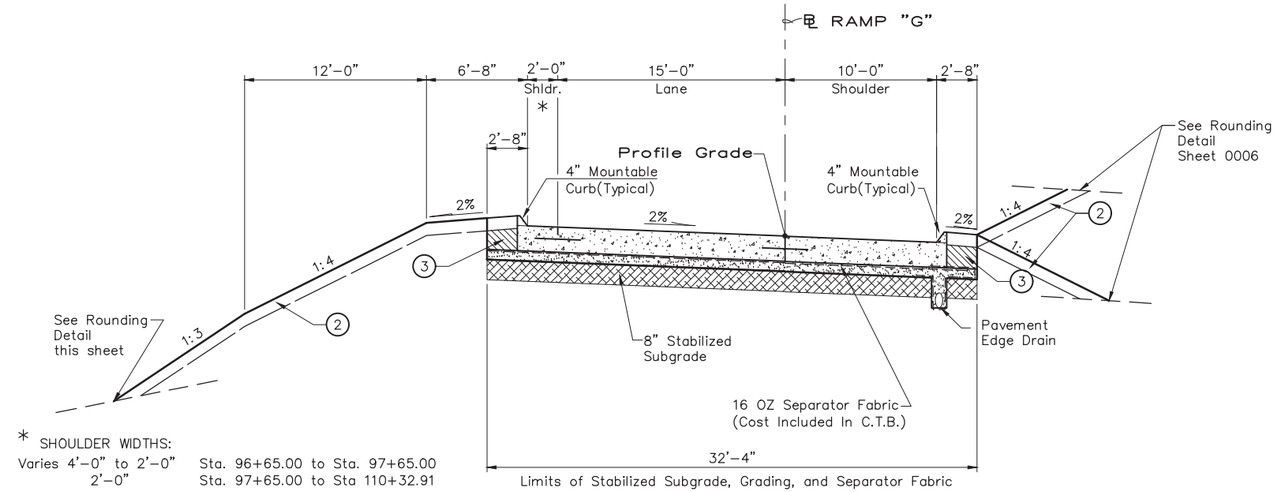

* SHOULDER WIDTHS:
Varies 4'–0" to 2'–0" Sta. 96+65.00 to Sta. 97+65.00
2'–0" Sta. 97+65.00 to Sta 110+32.91

TYPICAL SECTION 12 — RAMP "G"

STA. 96+65.00 TO STA. 110+32.91

PAVEMENT REQUIREMENT			
13" PAVEMENT STRUCTURE	2'–0" INSIDE SHOULDER	15'–0" DRIVING LANE	10'–0" OUTSIDE SHOULDER
SURFACE COURSE	9" DOWEL JOINTED P.C. CONCRETE	9" DOWEL JOINTED P.C. CONCRETE	9" PLAIN JOINTED P.C. CONCRETE
BASE COURSE	4" CEMENT TREATED BASE	4" CEMENT TREATED BASE	4" CEMENT TREATED BASE

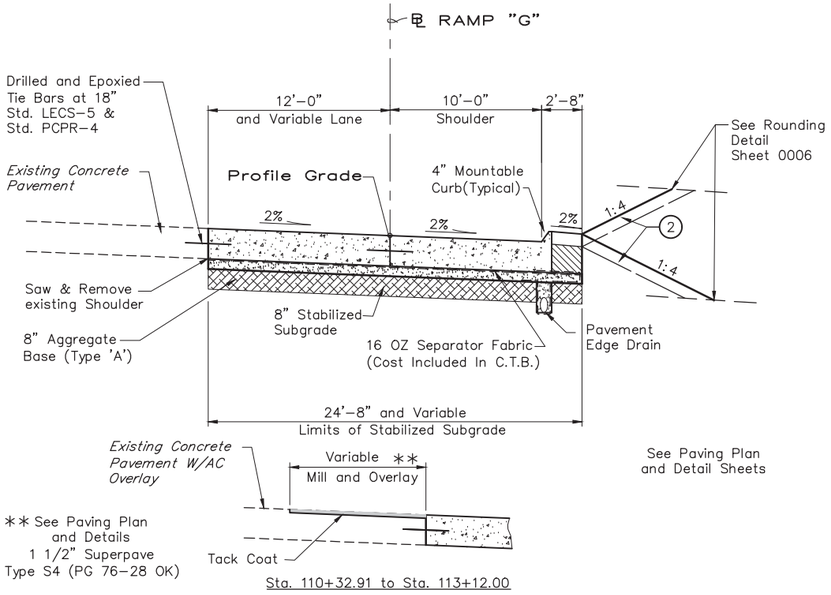

TYPICAL SECTION 13 — RAMP "G"

STA. 110+32.91 TO STA. 114+52.91

PAVEMENT REQUIREMENT		
16" PAVEMENT STRUCTURE	DRIVING LANE	10'–0" OUTSIDE SHOULDER
SURFACE COURSE	12" DOWEL JOINTED P.C. CONCRETE	12" PLAIN JOINTED P.C. CONCRETE
BASE COURSE	4" OPEN–GRADED BITUMINOUS BASE	4" OPEN–GRADED BITUMINOUS BASE

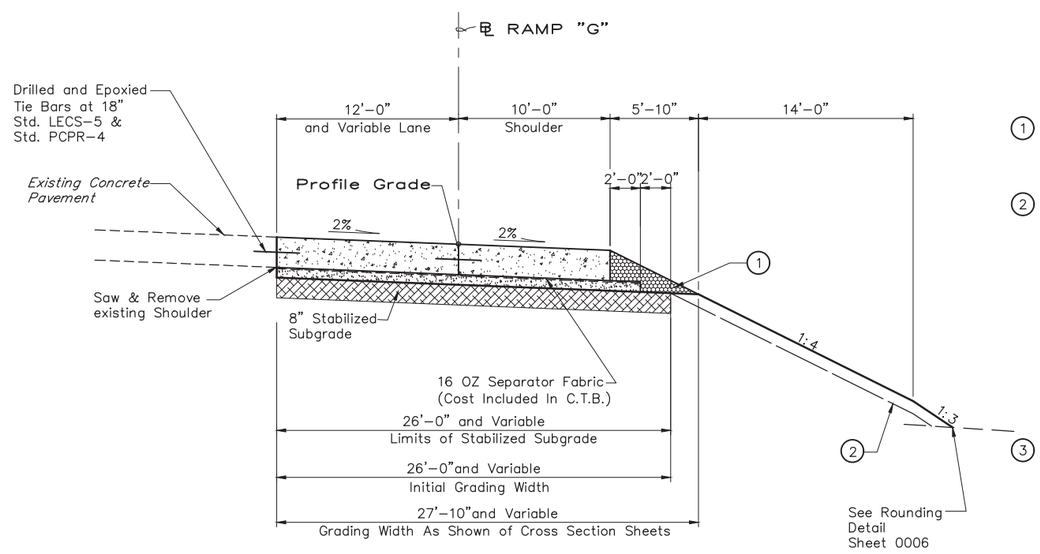

TYPICAL SECTION 14 — RAMP "G"

STA. 114+52.91 TO STA. 130+17.53

PAVEMENT REQUIREMENT		
16" PAVEMENT STRUCTURE	DRIVING LANE	10'–0" OUTSIDE SHOULDER
SURFACE COURSE	12" DOWEL JOINTED P.C. CONCRETE	12" PLAIN JOINTED P.C. CONCRETE
BASE COURSE	4" OPEN–GRADED BITUMINOUS BASE	4" OPEN–GRADED BITUMINOUS BASE

(1) BACKFILL NOTE:
THIS AREA TO BE BACKFILLED WITH TBSC TYPE "E" AND COMPACTED AS PART OF THE FINISHING OPERATIONS IN A MANNER APPROVED BY THE ENGINEER.

(2) TOPSOIL NOTE:
THE CONTRACTOR SHALL STRIP ALL OF THE AVAILABLE TOPSOIL, STOCKPILE IT, AND PLACE IT BACK ON THE SECTION IN ACCORDANCE WITH SECTION 205 OF THE STANDARD SPECIFICATION. RESERVED TOPSOIL SHALL BE SPREAD FIRST ON THE COMPLETED SLOPES OF THE CUT SECTIONS AND THE REMAINDER ON COMPLETED FILL SLOPES OR OTHER PRIORITY AREAS LOCATED BY THE ENGINEER. ALL ADDITIONAL COSTS ASSOCIATED WITH OPERATIONS SHALL BE INCLUDED IN THE PAY ITEM SALVAGED TOPSOIL, LUMP SUM.

THE GRADING LINE AS SHOWN ON THE TYPICAL AND CROSS SECTIONS IS TO THE TOP OF THE TOPSOIL EARTHWORK. QUANTITIES WERE NOT ADJUSTED FOR SALVAGE AND THE TOPSOIL QUANTITY IS INCLUDED IN THE MASS LINE BALANCE.

(3) BACKFILL NOTE:
THIS AREA TO BE BACKFILLED AND COMPACTED AS PART OF THE FINISHING OPERATIONS. COST TO BE INCLUDED IN OTHER ITEMS OF WORK.

REGISTERED PROFESSIONAL ENGINEER
ROBERT D. SEWELL
16173
OKLAHOMA
9/17/21

Survey	CKS	
Drawn	CKD	
Checked	CKE	
Approved		
Squad	C & K	

INTERCHANGE (OPERATIONAL IMPROVEMENTS) TULSA COUNTY

TYPICAL SECTION

JOB PIECE NO. 10981(05) SHEET NO. 0008

S:\Projects\ODOT\2015 EC-1710 I-44-169 Interchange\ACAD\PS&E\Plans\0008-1098105-Typicals Section.dwg, 11x17, 9/17/2021 3:07:52 PM

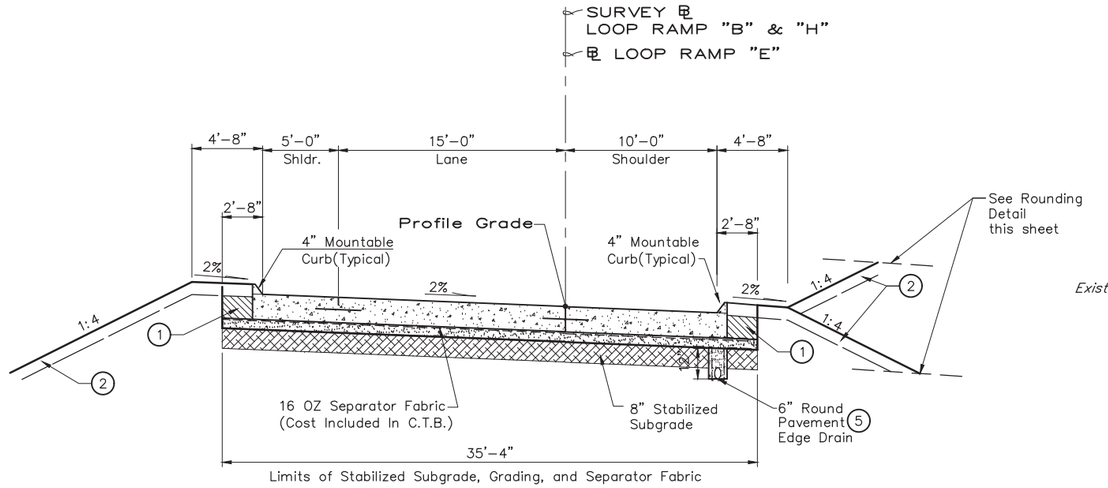

TYPICAL SECTION 15 — RAMP "B","H", & "E"

RAMP "B" STA. 1+07.08 TO STA. 5+60.30
RAMP "E" STA. 1+25.39 TO STA. 5+67.24
RAMP "H" STA. 0+94.21 TO STA. 7+46.95

PAVEMENT REQUIREMENT			
13" PAVEMENT STRUCTURE	5'-0" INSIDE SHOULDER	15'-0" DRIVING LANE	10'-0" OUTSIDE SHOULDER
SURFACE COURSE	9" DOWEL JOINTED P.C. CONCRETE	9" DOWEL JOINTED P.C. CONCRETE	9" PLAIN JOINTED P.C. CONCRETE
BASE COURSE	4" CEMENT TREATED BASE	4" CEMENT TREATED BASE	4" CEMENT TREATED BASE

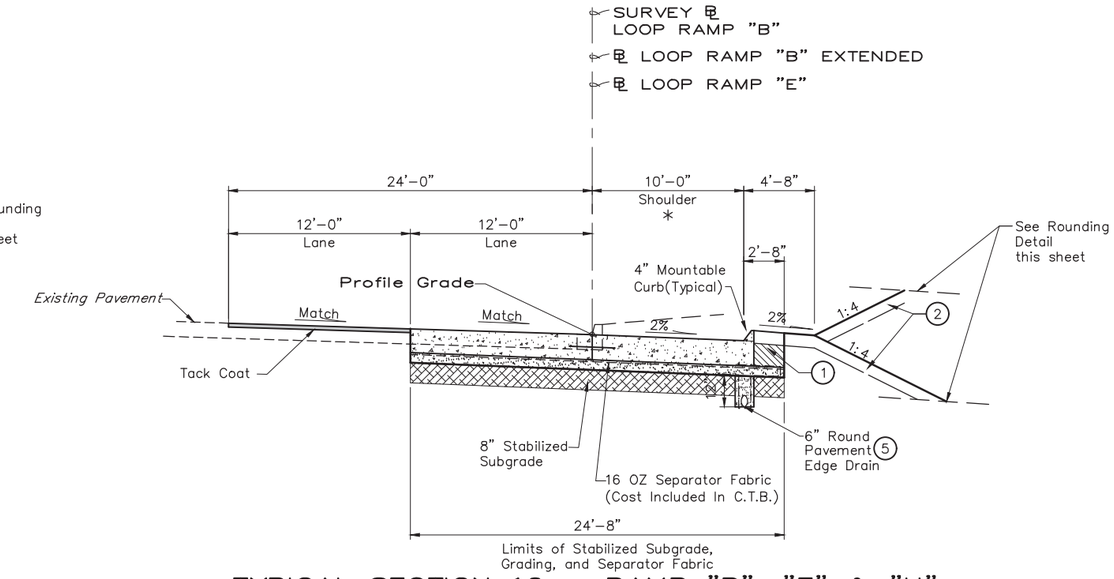

TYPICAL SECTION 16 — RAMP "B", "E" & "H"

RAMP "B" STA. 5+60.30 TO STA. 6+44.21
RAMP "B" EXTENDED STA. 6+44.21 TO STA. 7+76.47
RAMP "E" STA. 5+67.24 TO STA. 7+81.24
RAMP "E" STA. 11+43.47 TO STA. 12+06.57
RAMP "H" STA. 0+00.00 TO STA. 0+94.21

PAVEMENT REQUIREMENT			
13" PAVEMENT STRUCTURE	EXISTING PAVEMENT MILL AND OVERLAY	12'-0" WEAVE LANE	10'-0" OUTSIDE SHOULDER
SURFACE COURSE	1 1/2" SUPERPAVE, TYPE S4 (PG 76-28 OK)	9" DOWEL JOINTED P.C. CONCRETE	9" PLAIN JOINTED P.C. CONCRETE
BASE COURSE	NA	4" CEMENT TREATED BASE	4" CEMENT TREATED BASE

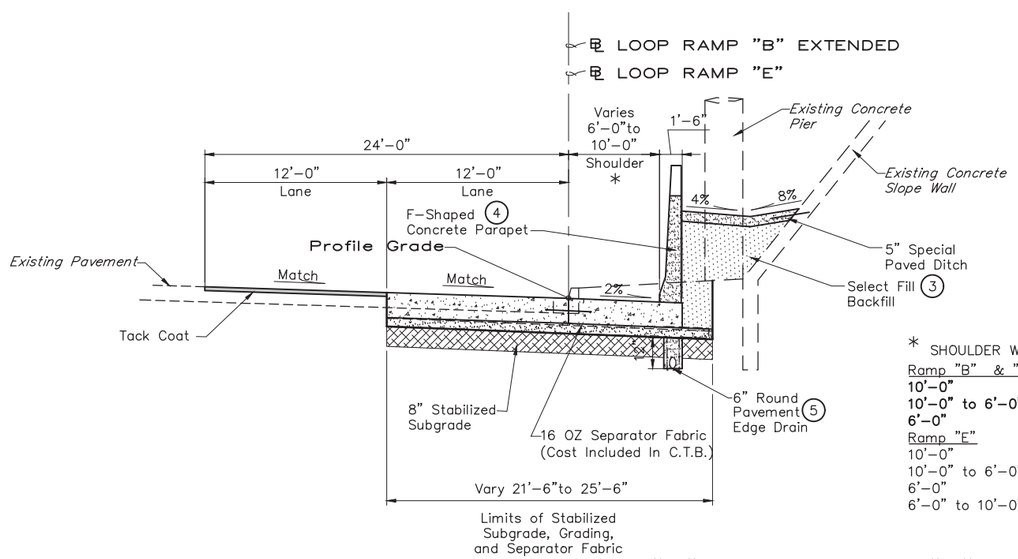

* SHOULDER WIDTHS:

Ramp "B" & "B" Extended

10'-0"	**Sta. 6+60.63 TO Sta. 7+76.47**
10'-0" to 6'-0"	**Sta. 7+76.47 TO Sta. 8+72.47**
6'-0"	**Sta. 8+72.47 TO Sta. 11+56.19**

Ramp "E"

10'-0"	Sta. 5+67.24 TO Sta. 7+81.24
10'-0" to 6'-0"	Sta. 7+81.24 TO Sta. 8+77.24
6'-0"	Sta. 8+77.24 TO Sta. 11+43.47
6'-0" to 10'-0"	Sta. 11+43.47 TO Sta. 12+06.57

TYPICAL SECTION 17 — RAMP "B" EXTENDED & "E"

RAMP "B" EXTENDED STA. 7+76.47 TO STA. 11+56.19
RAMP "D" STA. 19+63.33 TO STA. 19+79.66
RAMP "E" STA. 7+81.24 TO STA. 11+43.47

PAVEMENT REQUIREMENT			
13" PAVEMENT STRUCTURE	EXISTING PAVEMENT MILL AND OVERLAY	12'-0" WEAVE LANE	6'-0" TO 10'-0" OUTSIDE SHOULDER
SURFACE COURSE	1 1/2" SUPERPAVE, TYPE S4 (PG 76-28 OK)	9" DOWEL JOINTED P.C. CONCRETE	9" PLAIN JOINTED P.C. CONCRETE
BASE COURSE	NA	4" CEMENT TREATED BASE	4" CEMENT TREATED BASE

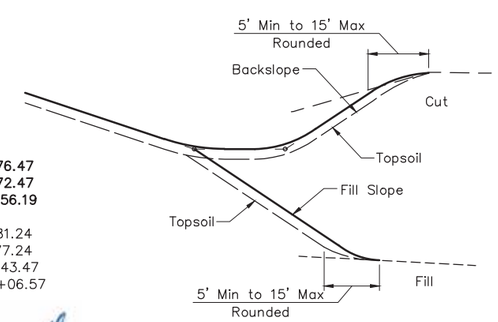

TOP OF CUT — TOE OF FILL ROUNDING DETAIL

INTERSECTION OF CUT AND FILL SLOPES WITH THE GROUND LINE ARE TO BE ROUNDED AS A PART OF THE FINISHING OPERATIONS. ROUNDING SHALL BE 5' MINIMUM FOR SMALLER CUTS AND FILLS, TO 15' MAXIMUM FOR LARGER CUTS AND FILLS OR AS DESIGNATED BY THE ENGINEER. COST OF ROUNDING TO BE INCLUDED IN THE PRICE BID FOR OTHER ITEMS OF WORK.

(1) BACKFILL NOTE:
THIS AREA TO BE BACKFILLED AND COMPACTED AS PART OF THE FINISHING OPERATIONS. COST TO BE INCLUDED IN OTHER ITEMS OF WORK.

(2) TOPSOIL NOTE:
THE CONTRACTOR SHALL STRIP ALL OF THE AVAILABLE TOPSOIL, STOCKPILE IT, AND PLACE IT BACK ON THE SECTION IN ACCORDANCE WITH SECTION 205 OF THE STANDARD SPECIFICATION. RESERVED TOPSOIL SHALL BE SPREAD FIRST ON THE COMPLETED SLOPES OF THE CUT SECTIONS AND THE REMAINDER ON COMPLETED FILL SLOPES OR OTHER PRIORITY AREAS LOCATED BY THE ENGINEER. ALL ADDITIONAL COSTS ASSOCIATED WITH OPERATIONS SHALL BE INCLUDED IN THE PAY ITEM SALVAGED TOPSOIL, LUMP SUM.

THE GRADING LINE AS SHOWN ON THE TYPICAL AND CROSS SECTIONS IS TO THE TOP OF THE TOPSOIL EARTHWORK. QUANTITIES WERE NOT ADJUSTED FOR SALVAGE AND THE TOPSOIL QUANTITY IS INCLUDED IN THE MASS LINE BALANCE.

(3) BACKFILL NOTE:
THIS AREA TO BE BACKFILLED WITH SAND. INCLUDE IN THE PRICE BID FOR SELECT BACKFILL. SEE SHEET R033 FOR DETAILS.

(4) HEIGHT VARIES FROM 32" TO 54". SEE SHEET R033 FOR SLAB REINFORCING AND ADDITIONAL DETAILS.

(5) PAVEMENT EDGE DRAIN : PROVIDE OUTLET LATERALS AT 300' ON CENTER MAXIMUM SPACING OR CONNECT TO NEAREST DRAINAGE STRUCTURE. SEE ODOT STD. PED-4

REGISTERED PROFESSIONAL ENGINEER
RODNEY SEWELL
16173
OKLAHOMA
9/17/21

Survey	CKS	
Drawn	CKD	
Checked	CKE	
Approved		
Squad	C & K	

INTERCHANGE (OPERATIONAL IMPROVEMENTS) TULSA COUNTY

TYPICAL SECTION

JOB PIECE NO. 10981(05)

SHEET NO. 0009

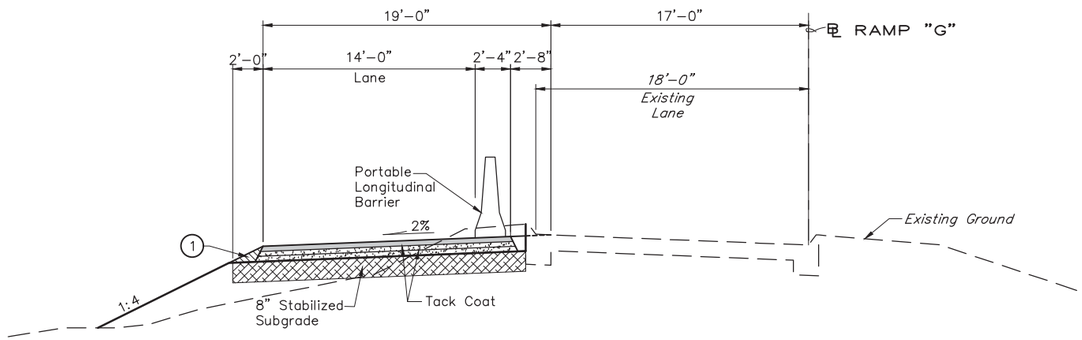

TYPICAL SECTION 18

RAMP "G" TEMPORARY DETOUR WIDENING

STA. 96+60 TO STA. 110+20

PAVEMENT REQUIREMENT	
7" PAVEMENT STRUCTURE	19' TEMPORARY DETOUR
SURFACE COURSE	2" SUPERPAVE, TYPE S4 (PG 64-22 OK)
BASE COURSE	5" SUPERPAVE, TYPE S3 (PG 64-22 OK)

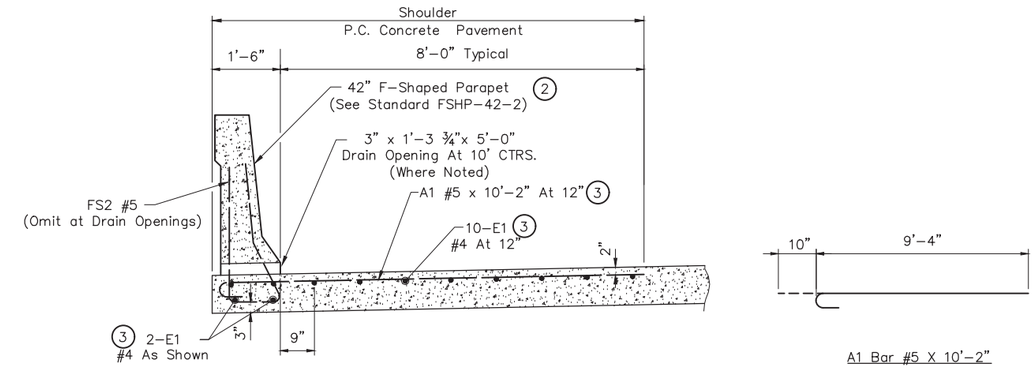

NOTE: ITEM 511(B) EPOXY COATED REINFORCING STEEL ESTIMATED AT 26.27 LB/LF OF F-SHAPED PARAPET.

TYPICAL SECTION 19

RAMP SHOULDER WITH F-SHAPED PARAPET

STA. 22+62.99 TO STA. 25+28.99, LT., ℄ RAMP D, NO DRAIN OPENINGS (295.00 LF)
STA. 28+50.99 TO STA. 29+35.00, LT., ℄ RAMP D, NO DRAIN OPENINGS (93.00 LF)
STA. 28+50.99 TO STA. 29+35.00, RT., ℄ RAMP D, W/DRAIN OPENINGS (79.00 LF)
STA. 38+85.00 TO STA. 40+76.84, LT., ℄ RAMP D, W/DRAIN OPENINGS (193.00 LF)
STA. 38+85.00 TO STA. 40+02.67, RT., ℄ RAMP D, W/DRAIN OPENINGS (117.40 LF)
STA. 37+60.00 ℄ RAMP F TO STA. 49+41.04, RT., ℄ RAMP D, W/DRAIN OPENINGS (1,172.44 LF)

1. BACKFILL NOTE: THIS AREA TO BE BACKFILLED AND COMPACTED AS PART OF THE FINISHING OPERATIONS. COST TO BE INCLUDED IN OTHER ITEMS OF WORK.
2. EXCEPT AS SHOWN ON THIS SHEET, PARAPETS SHALL BE CONSTRUCTED IN ACCORDANCE WITH STANDARD FSHP-42-2. ALL REINFORCING STEEL SHALL BE EPOXY COATED.
3. FS2, E1, A1, A2, AND A3 BARS SHALL BE INCLUDED IN THE ROADWAY ITEM 511(B) EPOXY COATED REINFORCING STEEL QUANTITIES.
4. PAVEMENT EDGE DRAIN : PROVIDE OUTLET LATERALS AT 300' ON CENTER MAXIMUM SPACING OR CONNECT TO NEAREST DRAINAGE STRUCTURE. SEE ODOT STD. PED-4 STUB INTO DRAINAGE STRUCTURE NO. 4 AND NO. 6

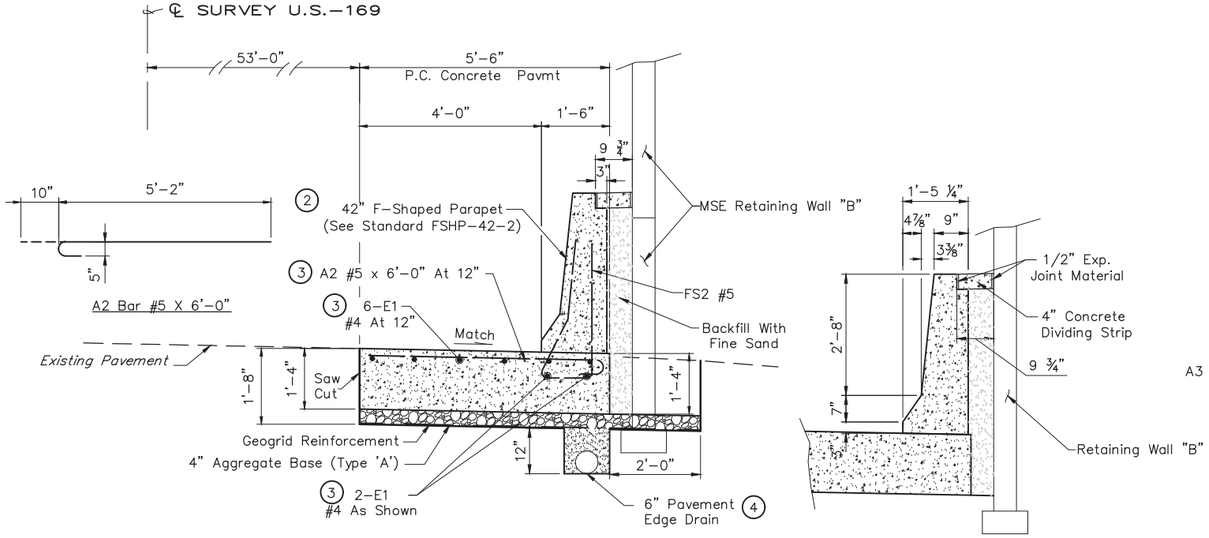

NOTE: THIS WORK SHALL BE PAID FOR BY THE FOLLOWING PAY ITEMS AND ESTIMATED QUANTITIES:

303(A) AGGREGATE BASE TYPE A	0.0926 CY PER LINEAR FOOT OF PARAPET
326(B) GEOGRID REINFORCEMENT	0.8333 SY PER LINEAR FOOT OF PARAPET
414(A) P.C.CONCRETE PAVEMENT(PLACEMENT):	0.6111 SY PER LINEAR FOOT OF PARAPET
414(G) P.C. CONCRETE FOR PAVEMENT:	0.2716 CY PER LINEAR FOOT OF PARAPET
511(B) EPOXY COATED REINFORCING STEEL:	19.25 LB PER LINEAR FOOT OF PARAPET
504(E) 42" F-SHAPED PARAPET:	PER LINEAR FOOT
610(C) 4" CONCRETE DIVIDING STRIP	0.0903 SY PER LINEAR FOOT OF PARAPET
613(J) EDGE DRAIN CONDUIT-PERFORATED	1.00 LF PER LINEAR FOOT OF PARAPET

TYPICAL SECTION 20

U.S.-169 WITH F-SHAPED PARAPET

STA. 187+37.75 TO STA. 191+52.82, ℄ SURVEY U.S.-169

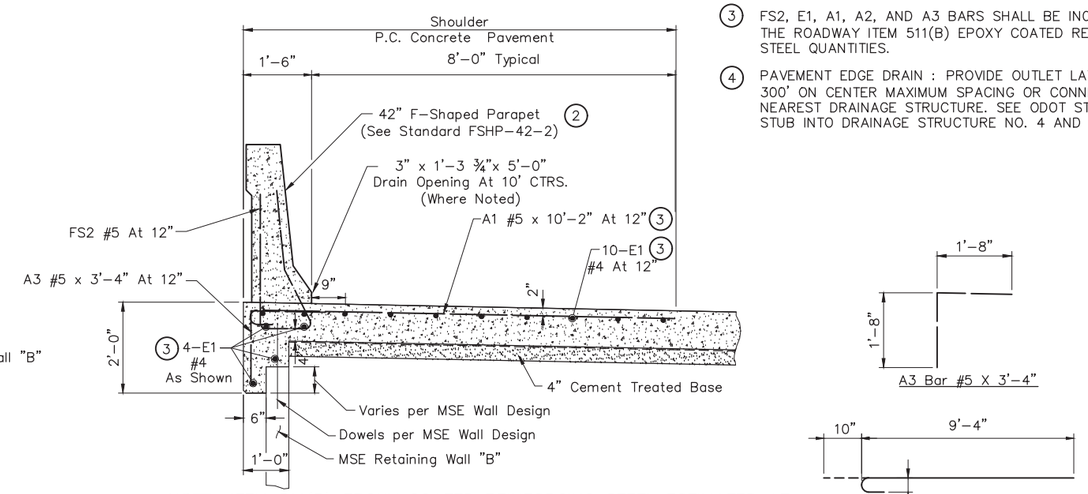

NOTE: ITEM 511(B) EPOXY COATED REINFORCING STEEL ESTIMATED AT 31.08 LB/LF OF F-SHAPED PARAPET.

TYPICAL SECTION 21

RAMP SHOULDER WITH F-SHAPED PARAPET

STA. 40+76.84 TO STA. 42+25.17, LT., ℄ RAMP D, W/ NO DRAIN OPENINGS (149.46 LF)

REGISTERED PROFESSIONAL ENGINEER ROBERT D. SEWELL 16173 OKLAHOMA 9/17/21

Survey	CKS	INTERCHANGE (OPERATIONAL IMPROVEMENTS) TULSA COUNTY
Drawn	CKD	**TYPICAL SECTION**
Checked	CKE	
Approved		
Squad	C & K	JOB PIECE NO. 10981(05) SHEET NO. 0010

S:\Projects\ODOT\2015 EC-1710 I-44-169 Interchange\ACAD\PS&E\Plans\0010-1098105-Typicals Section.dwg, 11x17, 9/17/2021 3:08:02 PM

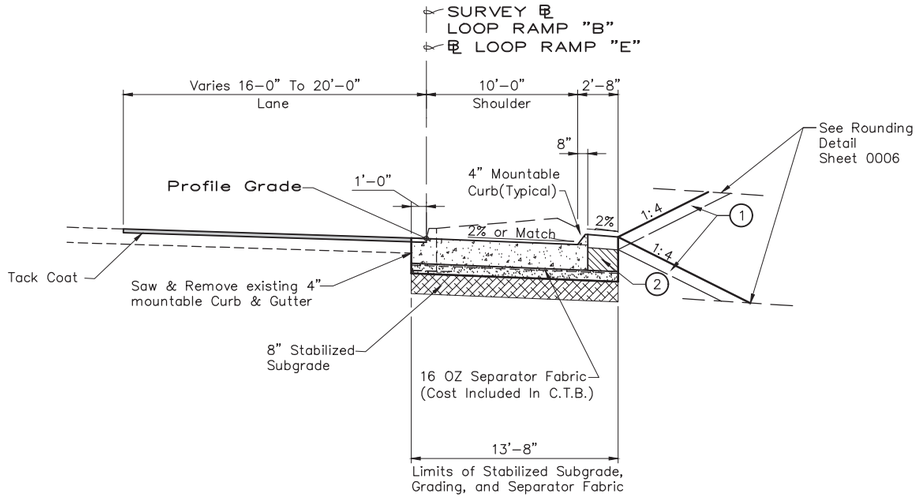

TYPICAL SECTION 22 – RAMP "B" & RAMP "E"

RAMP "B" STA. 0+42.59 TO STA. 1+07.08
RAMP "E" STA. 0+60.70 TO STA. 1+25.39

PAVEMENT REQUIREMENT		
13" PAVEMENT STRUCTURE	EXISTING PAVEMENT MILL AND OVERLAY	10'–0" OUTSIDE SHOULDER
SURFACE COURSE	1 1/2" SUPERPAVE, TYPE S4 (PG 76–28 OK)	9" PLAIN JOINTED P.C. CONCRETE
BASE COURSE	NA	4" CEMENT TREATED BASE

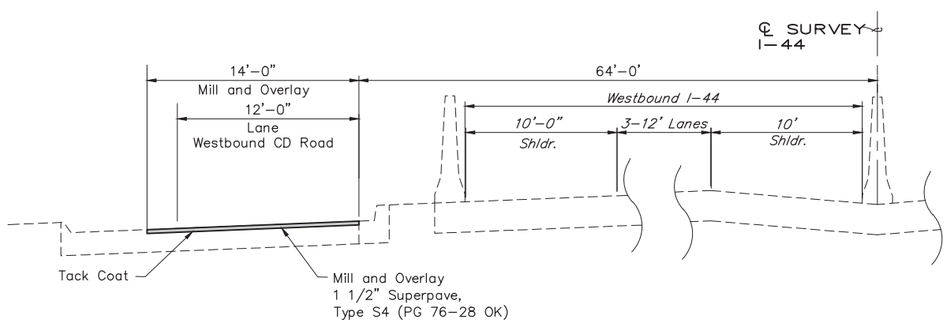

TYPICAL SECTION 24 – WESTBOUND CD ROAD

STA. 611+80.00 TO STA. 617+06.34 I–44 ℄ SURVEY

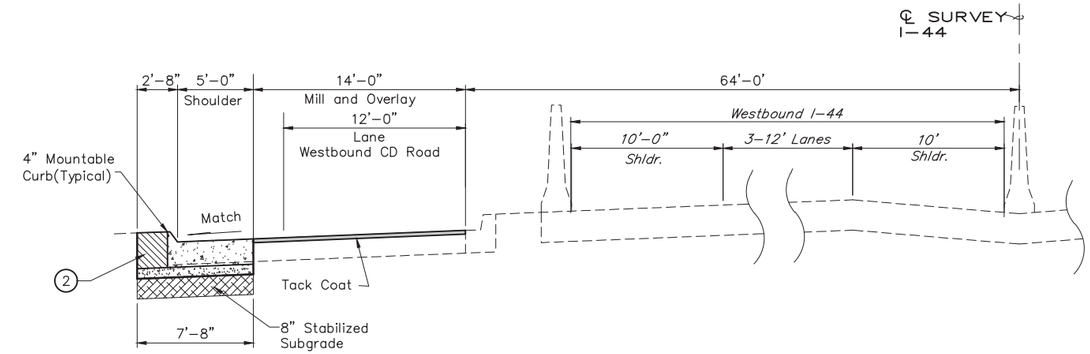

TYPICAL SECTION 23 – WESTBOUND CD ROAD

STA. 611+30.12 TO STA. 611+80.00 I–44 ℄ SURVEY

PAVEMENT REQUIREMENT		
13" PAVEMENT STRUCTURE	EXISTING PAVEMENT MILL AND OVERLAY	5'–0" OUTSIDE SHOULDER
SURFACE COURSE	1 1/2" SUPERPAVE, TYPE S4 (PG 76–28 OK)	9" PLAIN JOINTED P.C. CONCRETE
BASE COURSE	NA	4" CEMENT TREATED BASE

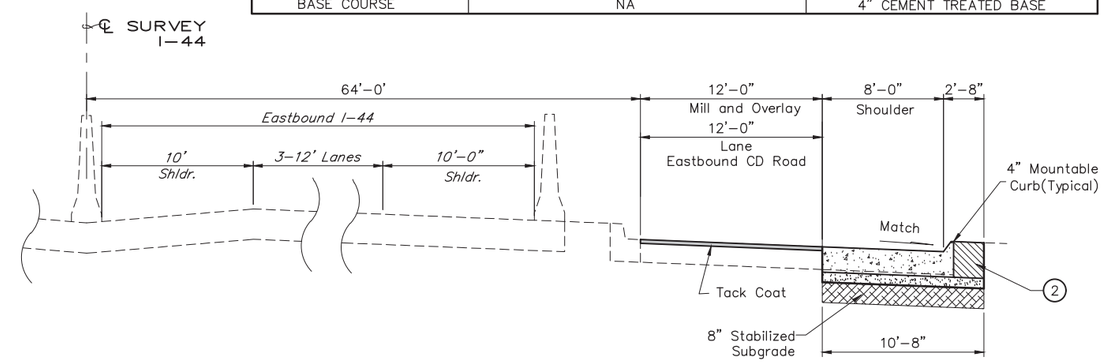

TYPICAL SECTION 25 – EASTBOUND CD ROAD

STA. 612+06.00 TO STA. 612+96.04 I–44 ℄ SURVEY

PAVEMENT REQUIREMENT		
13" PAVEMENT STRUCTURE	EXISTING PAVEMENT MILL AND OVERLAY	8'–0" OUTSIDE SHOULDER
SURFACE COURSE	1 1/2" SUPERPAVE, TYPE S4 (PG 76–28 OK)	9" PLAIN JOINTED P.C. CONCRETE
BASE COURSE	NA	4" CEMENT TREATED BASE

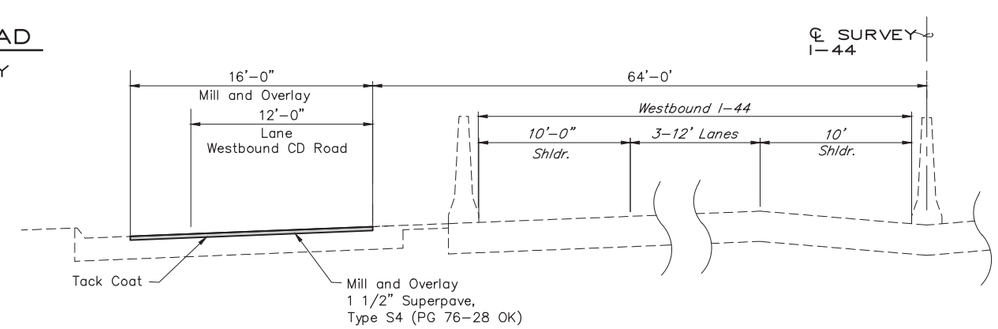

TYPICAL SECTION 26 – WESTBOUND CD ROAD

STA. 624+45.00 TO STA. 627+81.00 I–44 ℄ SURVEY

(1) TOPSOIL NOTE:
THE CONTRACTOR SHALL STRIP ALL OF THE AVAILABLE TOPSOIL, STOCKPILE IT, AND PLACE IT BACK ON THE SECTION IN ACCORDANCE WITH SECTION 205 OF THE STANDARD SPECIFICATION. RESERVED TOPSOIL SHALL BE SPREAD FIRST ON THE COMPLETED SLOPES OF THE CUT SECTIONS AND THE REMAINDER ON COMPLETED FILL SLOPES OR OTHER PRIORITY AREAS LOCATED BY THE ENGINEER. ALL ADDITIONAL COSTS ASSOCIATED WITH OPERATIONS SHALL BE INCLUDED IN THE PAY ITEM SALVAGED TOPSOIL, LUMP SUM.

THE GRADING LINE AS SHOWN ON THE TYPICAL AND CROSS SECTIONS IS TO THE TOP OF THE TOPSOIL EARTHWORK. QUANTITIES WERE NOT ADJUSTED FOR SALVAGE AND THE TOPSOIL QUANTITY IS INCLUDED IN THE MASS LINE BALANCE.

(2) BACKFILL NOTE:
THIS AREA TO BE BACKFILLED AND COMPACTED AS PART OF THE FINISHING OPERATIONS. COST TO BE INCLUDED IN OTHER ITEMS OF WORK.

REGISTERED PROFESSIONAL ENGINEER
ROBERT D. SEWELL
16173
OKLAHOMA
9/17/21

Survey	CKS		INTERCHANGE (OPERATIONAL IMPROVEMENTS) TULSA COUNTY
Drawn	CKD		**TYPICAL SECTION**
Checked	CKE		
Approved			
Squad	C & K		JOB PIECE NO. 10981(05) SHEET NO. 0011

S:\Projects\ODOT\2015 EC-1710 I-44-169 Interchange\ACAD\PS&E\Plans\0011-10981(05)-Typicals Section.dwg, 11x17, 9/17/2021 3:08:07 PM

BRIDGE GENERAL NOTES

BRIDGE CONSTRUCTION SEQUENCE -

THE CONSTRUCTION SEQUENCE FOR THE BRIDGE IS AS FOLLOWS:

PHASE 1 - CONSTRUCT PIERS 5 THRU 10.
PHASE 2 - CONSTRUCT PIER 4.
PHASE 3 - CONSTRUCTION REMAINING PIERS, BOTH ABUTMENTS, SUPERSTRUCTURE, APPROACH SLABS, SLOPE WALLS, AND ANY REMAINING PORTION OF THE BRIDGE.

SEE ROADWAY PLANS FOR CONSTRUCTION SEQUENCE OVERVIEW FOR MORE DETAILS.

SPECIFICATIONS -

COMPLY WITH THE REQUIREMENTS OF THE 2019 OKLAHOMA STANDARD SPECIFICATIONS FOR HIGHWAY CONSTRUCTION, EXCEPT AS MODIFIED BY THE PLANS AND SPECIAL PROVISIONS.

PILE DRIVING -

USE A PILE DRIVING HAMMER OF THE SIZE AND TYPE CAPABLE OF CONSISTENTLY DELIVERING THE EFFECTIVE DYNAMIC ENERGY TO DRIVE THE PILES TO THE REQUIRED TIP ELEVATION AND TO ACHIEVE AN AXIAL LOAD RESISTANCE EQUAL TO OR GREATER THAN THE FACTORED PILE REACTION WITHOUT EXCEEDING THE LIMITATIONS SET ON THE ALLOWABLE DRIVING STRESSES IN ACCORDANCE WITH SUBSECTION 514.03.A.(2) OF THE SPECIFICATIONS.

PILE CAPACITY -

THE REQUIRED PILE SIZE AND THE FACTORED PILE REACTION ARE SHOWN IN THE PLANS WITH THE FOUNDATION DATA. THE FOLLOWING FORMULA (GATES EQUATION) SHALL BE USED TO DETERMINE THE AXIAL LOAD RESISTANCE OF THE DRIVEN FOUNDATION PILES:

AXIAL LOAD RESISTANCE = PHI * [SQRT (E) * 0.875 * LG (10 * N) - 50] (TONS)

WHERE: PHI = RESISTANCE FACTOR OF 0.4
E = ENERGY PRODUCED BY THE HAMMER PER BLOW IN FOOT-POUNDS. FOR GRAVITY AND SINGLE ACTING DIESEL HAMMERS, THE VALUE IS BASED ON THE ACTUAL RAM STROKE OBSERVED IN THE FIELD AND MEASURED IN FEET MULTIPLIED BY THE RAM WEIGHT IN POUNDS.
N = AVERAGE NUMBER OF HAMMER BLOWS PER INCH OF PILE PENETRATION FOR THE LAST 10 TO 20 BLOWS DELIVERED TO THE PILE HEAD.
SQRT = SQUARE ROOT
LG = LOGARITHM TO THE BASE 10

THE ABOVE FORMULA IS ONLY APPLICABLE WHEN CERTAIN CONDITIONS APPLY: THE PILE DRIVING HAMMER HAS A FREE FALL (GRAVITY & SINGLE ACTING HAMMERS ONLY); THE HEAD OF THE PILE IS NOT BROOMED, CRUSHED OR OTHERWISE DAMAGED; THE PENETRATION IS QUICK AND UNIFORM; THERE IS NO APPRECIABLE REBOUND OF THE HAMMER; AND A FOLLOWER IS NOT USED.

THE NUMBER OF BLOWS PER INCH OF PILE PENETRATION MAY BE MEASURED EITHER DURING INITIAL DRIVING OR BY RE-DRIVING WITH A WARM HAMMER OPERATED AT FULL ENERGY AFTER A PILE SET PERIOD, AS DETERMINED BY THE ENGINEER.

IF WATER JETS ARE USED IN CONNECTION WITH THE DRIVING, DETERMINE THE AXIAL LOAD RESISTANCE BY THE FORMULA SHOWN ONLY AFTER THE JETS HAVE BEEN WITHDRAWN.

DRILLED SHAFTS -

USE A MIX DESIGN FOR ALL DRILLED SHAFTS THAT WILL LIMIT CURING TEMPERATURES TO LOWER THAN 150 DEGREES FAHRENHEIT, WHILE RESULTING IN A MINIMUM COMPRESSIVE STRENGTH OF 4,000 PSI AT 56 DAYS. USE TYPE I, II OR V CEMENT WITH UP TO 35% CLASS F FLY ASH REPLACEMENT. ALTERNATIVELY, A TYPE IP(XX) CEMENT MAY BE USED PROVIDED CLASS F FLY ASH IS UTILIZED FOR THE POZZOLAN AND AN ADDITIONAL REPLACEMENT OF CLASS F FLY ASH DURING BATCHING UP TO 35-(XX)% IS MADE. USE A MINIMUM OF 25% CLASS F FLY ASH REPLACEMENT. CLASS C FLY ASH AND ADDITIONAL PORTLAND CEMENT WILL NOT BE ALLOWED. OTHER TEMPERATURE CONTROL CONCRETE MIXES MAY BE ALLOWED WITH THE APPROVAL OF THE ENGINEER.

PROVIDE A METHOD FOR MONITORING CONCRETE TEMPERATURE IN DRILLED SHAFTS DURING CURING. SUBMIT A TEMPERATURE MONITORING PLAN TO THE ENGINEER FOR APPROVAL. BEGIN MONITORING WHEN THE CONCRETE IS PLACED AND MONITOR CONTINUOUSLY FOR SEVEN DAYS. MONITOR TEMPERATURES AT MIDHEIGHT OF THE SHAFT, WITHIN FIVE FEET OF THE TOP OF SHAFT, AND AS DIRECTED BY ENGINEER. IF THE TEMPERATURE EXCEEDS 145 DEGREES FAHRENHEIT, MAKE ADJUSTMENTS TO THE MIX DESIGN PRIOR TO PLACING CONCRETE IN THE NEXT SHAFT.

CONCRETE -

PROVIDE ALL PEDESTAL CONCRETE EDGES WITH A 3/4" CHAMFER. PROVIDE ALL OTHER EXPOSED CONCRETE EDGES OF THE SUBSTRUCTURE WITH A 1 1/2" CHAMFER UNLESS OTHERWISE SHOWN OR NOTED. PROVIDE ALL EXPOSED CONCRETE EDGES OF THE SUPERSTRUCTURE WITH A 3/4" CHAMFER UNLESS OTHERWISE SHOWN OR NOTED. USE SIZED LUMBER FOR ALL CHAMFER STRIPS.

EQUIP CONCRETE VIBRATORS WITH A SHEATH DESIGNED TO PREVENT DAMAGE TO EPOXY COATINGS WHEN VIBRATING CONCRETE CONTAINING EPOXY COATED REINFORCING STEEL.

FURNISH FORM LINERS FOR ABUTMENT WINGS USING SYMONS/DAYTON SUPERIOR "FRACTURED FIN" (F30717), OR APPROVED EQUAL. LINE UP JOINTS AS CLOSE AS PRACTICAL. NO SCRAP OR ODD SIZED PIECES WILL BE ALLOWED. MAKE PROVISIONS IN THE ADJUSTMENT OF FORMS TO CORRECT ANY DEFORMATIONS. SEAL FORM LINERS AT ALL ENDS, EDGE JOINTS, AND TIE HOLES TO PREVENT DISCOLORATION, SAND STREAKING AND FINS ON CONCRETE SURFACES. DRESS ANY DISCONTINUITY OF RELIEF PATTERN, PARTICULARLY AT PANEL BUTT JOINTS, IN A MANNER APPROVED BY THE ENGINEER. SUBMIT A 12" X 18" SAMPLE PANEL WITH THE APPROPRIATE CONCRETE SURFACE FINISH TO THE ENGINEER FOR APPROVAL. INCLUDE ALL COST OF FORM LINERS, LABOR, MATERIALS, TOOLS AND INCIDENTALS NECESSARY TO COMPLETE THE WORK AS SPECIFIED IN OTHER ITEMS OF WORK.

STAIN ALL EXPOSED CONCRETE SURFACES OF THE PIERS, OUTSIDE AND BOTTOM OF THE DECK SLAB OVERHANG, AND THE BRIDGE PARAPET IN FEDERAL STANDARD COLOR NO. 33564. INCLUDE ALL COST OF CONCRETE STAIN, LABOR, MATERIALS, TOOLS AND INCIDENTALS NECESSARY TO COMPLETE THE WORK AS SPECIFIED IN OTHER RELATED ITEMS OF WORK.

STRUCTURAL STEEL -

PROVIDE STRUCTURAL STEEL FOR PLATE GIRDERS AND ALL STIFFENER PLATES IN ACCORDANCE WITH AASHTO M270 (ASTM A709), GRADE 50WT2 (WEATHERING STEEL, NON FRACTURE CRITICAL CHARPY V-NOTCH TESTED FOR ZONE 2). USE SHEAR CONNECTORS CONFORMING TO AASHTO M169 (ASTM A108), GRADE 1015, 1018 OR 1020. PROVIDE WELDING WITH WEATHERING CHARACTERISTICS. CAMBER GIRDERS TO ACCOUNT FOR DEAD LOAD DEFLECTION AND VERTICAL CURVE. NON-DESTRUCTIVE TESTING WILL BE REQUIRED AS APPROPRIATE.

PROVIDE STRUCTURAL STEEL FOR DIAPHRAGM SHAPES AND PLATES IN ACCORDANCE WITH AASHTO M270 (ASTM A709), GRADE 50W (WEATHERING STEEL, CHARPY V-NOTCH TESTING NOT REQUIRED). USE BOLTS CONFORMING TO AASHTO M164 (ASTM A325). PROVIDE ALL BOLTS, NUTS, WASHERS AND WELDING WITH WEATHERING CHARACTERISTICS.

THE CONTRACTOR MAY SUBSTITUTE A BENT PLATE DIAPHRAGM IN LIEU OF THE CHANNEL AND GUSSET PLATES SHOWN IN THE PLANS AT NO ADDITIONAL COST TO THE DEPARTMENT. PROVIDE 1/2" MINIMUM PLATE THICKNESS FORMED IN THE SHAPE OF THE CHANNEL WITH 4" MINIMUM FLANGES. FABRICATE BENT PLATE DIAPHRAGM TO A DEPTH EQUAL TO OR GREATER THAN SHOWN FOR THE COMBINED CHANNEL AND GUSSET PLATE. ALL COST TO CONSTRUCT BENT PLATE DIAPHRAGM SHALL BE AT CONTRACTOR'S EXPENSE.

PROVIDE STRUCTURAL STEEL FOR ANCHOR PLATES, CONTACT PLATES, AND BUILT-UP CONTACT ANGLES IN ACCORDANCE WITH ASTM A240 (AUSTENITIC STAINLESS STEEL, TYPE 316, CHARPY V-NOTCH TESTING NOT REQUIRED). FOR ANCHOR BOLTS, PROVIDE CONTINUOUSLY THREADED BARS IN ACCORDANCE WITH ASTM A320, CLASS 2, GRADE B8M (AUSTENITIC STAINLESS STEEL, TYPE 316, CHARPY V-NOTCH TESTING NOT REQUIRED). USE AUSTENITIC STAINLESS STEEL NUTS AND WASHERS CONFORMING TO ASTM A194, GRADE 8M AND ASTM A320, RESPECTIVELY. PERFORM ALL WELDING CONSISTENT WITH PROCEDURES FOR STAINLESS STEEL.

DECK SLAB -

EPOXY-COAT OR GALVANIZE STEEL ITEMS USED TO FACILITATE CONSTRUCTION, SUCH AS DECK FORM HANGERS, TY-BAR CLIPS, INSERT WELD ANCHORS, OR OTHER APPURTENANCES, THAT WILL REMAIN IN PLACE IN THE DECK SLAB. EPOXY-COAT IN ACCORDANCE WITH AASHTO M284 OR GALVANIZE IN ACCORDANCE WITH AASHTO M111.

PLACE THE DECK SLAB CONCRETE ONE SECTION AT A TIME CONSISTENT WITH THE DECK SLAB PLACEMENT SEQUENCE DIAGRAM SHOWN IN THE PLANS. IN THE EVENT OF AN EMERGENCY, HALT THE PLACEMENT OF CONCRETE BY FORMING A CONSTRUCTION JOINT MADE PERPENDICULAR TO THE DIRECTION OF TRAFFIC OR AS DIRECTED BY THE ENGINEER. DO NOT PLACE ANY HEAVY EQUIPMENT ON THE FINISHED DECK SLAB WITHIN 5 FEET OF ANY CONSTRUCTION JOINT UNTIL CONCRETE IS IN PLACE ON BOTH SIDES OF THE RESPECTIVE JOINT AND AT LEAST 48 HOURS HAS ELAPSED SINCE CONCRETE PLACEMENT.

SEAL ALL DECK SLAB CONSTRUCTION JOINTS WITH HIGH MOLECULAR WEIGHT METHACRYLATE IN ACCORDANCE WITH SECTION 523 OF THE SPECIFICATIONS. INCLUDE ALL COST OF EQUIPMENT AND LABOR FOR THE INSTALLATION OF THE HIGH MOLECULAR WEIGHT METHACRYLATE SEALER IN THE CONTRACT UNIT PRICE OF "SEALER CRACK PREPARATION". INCLUDE ALL COST OF THE HIGH MOLECULAR WEIGHT METHACRYLATE SEALER IN THE CONTRACT UNIT PRICE OF "SEALER RESIN". THE DEPARTMENT WILL NOT MEASURE THE PREPARATION AND SEALER OF EMERGENCY CONSTRUCTION JOINTS FOR PAYMENT.

URETHANE COATING SYSTEM -

PROVIDE A COATING SYSTEM SUCH AS CIM 1000 (MANUFACTURED BY CIM INDUSTRIES), POLYCOAT-PC-IM 129 SYSTEM (MANUFACTURED BY POLYCOAT PRODUCTS) OR AN APPROVED EQUAL. COATING SYSTEM MUST INCLUDE AN EPOXY SURFACE PRIMER AND HAVE A MINIMUM TOTAL DRY THICKNESS OF 58 MILS. PREPARE SURFACE AND APPLY COATINGS IN ACCORDANCE WITH MANUFACTURER'S RECOMMENDATIONS, AT LOCATIONS SHOWN IN THE PLANS.

STORE AND HANDLE PRODUCT IN ACCORDANCE WITH MANUFACTURER'S RECOMMENDATIONS. BEFORE SHIPPING, OBTAIN A MATERIAL SAFETY DATA SHEET (MSDS) FOR EACH COMPONENT AND PROVIDE A COPY TO THE ENGINEER. POST SAFETY AND HANDLING INFORMATION AT STORAGE AREAS AND AT THE JOB SITE.

SUBMIT A WORK PLAN TO THE ENGINEER INCLUDING SURFACE PREPARATION TECHNIQUES, MATERIALS, AND APPLICATION PROCEDURES. DO NOT APPLY COATING UNTIL SUBSTRUCTURE CONCRETE HAS OBTAINED THE MINIMUM 28-DAY COMPRESSIVE STRENGTH IN ACCORDANCE WITH SUBSECTION 701.01 OF THE SPECIFICATIONS. APPLY URETHANE COATING BEFORE ANY OTHER SURFACE TREATMENTS AND MASK EDGES TO PROVIDE A CLEAN, STRAIGHT FINISH.

STAY-IN-PLACE DECK FORMS -

THE CONTRACTOR MAY USE STAY-IN-PLACE STEEL DECK FORMS IF THE MINIMUM DECK SLAB THICKNESS SHOWN IN THE PLANS IS OBTAINED BY MEASURING FROM THE TOP OF THE DECK SLAB TO THE TOP PORTION OF THE STEEL CORRUGATION. PREFORMED CORRUGATION FILLER, COMPOSED OF POLYSTYRENE OR OTHER MATERIAL, MAY BE USED IF BONDED TO THE DECK FORMS. NO ADDITIONAL CONCRETE WEIGHT OF THE DECK SLAB IS PERMITTED. THE TOTAL ADDITIONAL WEIGHT OF THE DECK FORM AND FILLER SHALL NOT EXCEED 5 P.S.F. THE DEPARTMENT CONSIDERS ALL COSTS OF STAY-IN-PLACE STEEL DECK FORMS TO BE INCLUDED IN THE CONTRACT UNIT PRICE OF CLASS AA CONCRETE.

THE CONTRACTOR MAY SUBSTITUTE STAY-IN-PLACE PRESTRESSED CONCRETE DECK FORMS, AT NO ADDITIONAL COST TO THE DEPARTMENT, IF THE FOLLOWING CONDITIONS ARE MET:

(1) THE BRIDGE ENGINEER APPROVES SHOP DRAWINGS AND STRUCTURAL CALCULATIONS FOR THE FORMS SUBMITTED BY THE CONTRACTOR.
(2) THE BRIDGE ENGINEER APPROVES A NEW STRUCTURAL DESIGN, STRUCTURAL CALCULATIONS, AND NEW REINFORCING SCHEDULE FOR THE DECK SLAB SUBMITTED BY THE CONTRACTOR.
(3) SHOP DRAWINGS, NEW DECK SLAB REINFORCING SCHEDULE, STRUCTURAL DESIGNS, AND CALCULATIONS ARE PREPARED AND SEALED BY A PROFESSIONAL ENGINEER LICENSED IN THE STATE OF OKLAHOMA.

PLATE GIRDER BRACING FOR DECK SLAB PLACEMENT -

SELECT A TEMPORARY BRACING SYSTEM IN ACCORDANCE WITH SECTION 502 OF SPECIFICATIONS CAPABLE OF PROVIDING A CONTINUOUS LOAD PATH FOR ALL ANTICIPATED LOADS DURING DECK SLAB CONCRETE PLACEMENT. BRACING SYSTEM MUST ALSO PREVENT SIGNIFICANT LOCALIZED AND/OR GLOBAL DISTORTION OF THE STEEL GIRDERS THAT COULD CAUSE INSTABILITY OR COMPROMISE THE INTENDED FIT CONDITION. PROVIDE RESTRAINT AT BEARING ASSEMBLIES IF UPLIFT OF THE GIRDER IS ANTICIPATED OR ENCOUNTERED. THE BRACING SYSTEM SHOWN IN THE PLANS IS FOR ILLUSTRATION PURPOSES ONLY AND ALTERNATIVE SYSTEMS MAY BE CONSIDERED.

PLACE ALL BRACING MEMBERS PERPENDICULAR TO GIRDERS. PROVIDE A BRACING MEMBER AT THE OPPOSITE SIDE OF THE GIRDER WEB FOR EACH BRACING, FALSEWORK, OR FORMWORK MEMBER BEARING ON THE GIRDER WEB. LOCATE ALL MEMBERS BEARING ON THE GIRDER WEB NOT MORE THAN 6 INCHES FROM THE FLANGE. NO WELDING TO GIRDER WEB OR FLANGES IS PERMITTED. EPOXY-COAT OR GALVANIZE ALL COMPONENTS TO REMAIN IN PLACE AND CAST INSIDE THE DECK SLAB. USE DECK SLAB OVERHANG FORMWORK CAPABLE OF ADJUSTMENT DURING THE PLACEMENT OF CONCRETE IN ORDER TO MAINTAIN PROPER GRADES AT THE OVERHANG.

SUBMIT DESIGN DRAWINGS AND CALCULATIONS OF THE PROPOSED BRACING SYSTEM TO THE ENGINEER OF RECORD FOR APPROVAL. DESIGN DRAWINGS AND CALCULATIONS MUST BE SIGNED AND SEALED BY A PROFESSIONAL ENGINEER LICENSED IN THE STATE OF OKLAHOMA. IF INCLUDED IN CHOSEN SYSTEM, INCLUDE WITH THE DESIGN CALCULATIONS METHODS TO PREDICT CRUSH AND SETTLEMENT OF SHIMS USED FOR ADJUSTMENT. DO NOT BEGIN BRACING INSTALLATION OR DECK SLAB PLACEMENT UNTIL APPROVAL OF THE DESIGN CALCULATIONS AND DRAWINGS BY THE ENGINEER OF RECORD IS RECEIVED. ALLOW 2 WEEKS FOR REVIEW AND APPROVAL.

INCLUDE ALL COSTS ASSOCIATED WITH FALSEWORK/BRACING, INCLUDING LABOR, MATERIALS, AND PROFESSIONAL SERVICES, IN THE CONTRACT UNIT PRICE OF "ENGINEERED FALSEWORK". INCLUDE THE INSTALLATION OF ALL OTHER FALSEWORK, BRACING, AND RELATED PROFESSIONAL SERVICES IN OTHER ITEMS OF WORK.

SEALED EXPANSION JOINTS -

CONSTRUCT SEALED EXPANSION JOINTS AT PIER NOS. 1, 5, AND 8. INCLUDES ALL COSTS ASSOCIATED WITH INSTALLING SEALED EXPANSION JOINTS INCLUDING MATERIALS, LABOR, EQUIPMENT, AND ALL INCIDENTALS IN THE CONTRACT UNIT PRICE OF "SEALED EXPANSION JOINTS".

WATER REPELLENT TREATMENT -

APPLY WATER REPELLENT TREATMENT TO THE BRIDGE IN MANNER CONSISTENT WITH THE DETAILS SHOWN IN THE PLANS.

SOFTWARE -

THE FOLLOWING COMPUTER SOFTWARE WAS USED IN THE ANALYSIS AND DESIGN OF THE STRUCTURE(S) DETAILED IN THE PLANS:

(1) WHITE ENGINEERING ASSOCIATES, INC. DECK SLAB DESIGN (VERSION 2.06, 10-12-07)
(2) WHITE ENGINEERING ASSOCIATES, INC. BRIDGE LOAD DISTRIBUTION (VERSION 1.11, 10-24-18)
(1) MDX CURVED & STRAIGHT STEEL BRIDGES DESIGN AND RATING (VERSION 6.5.4342, 1-3-20)
(4) WHITE ENGINEERING ASSOCIATES, INC. ELASTOMERIC BEARING PAD DESIGN (VERSION 3.01, 05-26-10)
(5) WHITE ENGINEERING ASSOCIATES, INC. PIER DESIGN (VERSION 2.02, 09-24-07)
(6) IES VISUALANALYSIS (VERSION 4.01.013, 02-01-02)
(7) STRUCTUREPOINT, L.L.C. SPCOLUMN (VERSION 6.00, 2017)
(8) WHITE ENGINEERING ASSOCIATES, INC. ABUTMENT/RETAINING WALL DESIGN (VERSION 2.00, 10-19-07)

REVISIONS		
REV. NO.	DESCRIPTION	DATE

LICENSED PROFESSIONAL ENGINEER
AUGUSTINE F. WUERTZ
29197
OKLAHOMA
7-16-21

I-44 E.B. TO U.S.169 N.B. RAMP D	TULSA COUNTY	Design	CEG
GENERAL NOTES & SUMMARY OF PAY QUANTITIES (BRIDGE) SHEET 1 OF 2		Detail	DRB
		Check	AFW
		WHITE ENGINEERING ASSOCIATES	
STATE OF OKLAHOMA	DEPARTMENT OF TRANSPORTATION		
JOB PIECE NO. 10981(05)		SHEET NO. AB01	

I:\Active\16111\Drawings\AB01 Notes.dwg, 7/16/2021 9:52:44 AM, Deanne

REVISIONS		
REV. NO.	DESCRIPTION	DATE

BRIDGE PAY ITEM NOTES

(BR-1) PAYMENT TO THE CONTRACTOR WILL BE BASED ON PLAN QUANTITIES.

(BR-2) THE CONTRACTOR MAY PLACE CONCRETE AGAINST THE LIMITS OF EXCAVATION IF THE MATERIAL IS EXCAVATED TO THE NEAT LINES OF THE SUBSTRUCTURE AND APPROVED BY THE ENGINEER. IF NECESSARY, USE FORMS AT VERTICAL FACES AND REMOVE THE FORMS AFTER CONCRETE HARDENS. IF THE CONTRACTOR CHOOSES TO PLACE CONCRETE AGAINST THE SOIL, THE DEPARTMENT WILL PAY FOR SUBSTRUCTURE EXCAVATION COMMON IN ACCORDANCE WITH THE DIAGRAMS SHOWN IN THE PLANS.

(BR-3) ITEM "ENGINEERED FALSEWORK" CONSISTS OF THE INSTALLATION AND REMOVAL OF TEMPORARY FALSEWORK AND BRACING NECESSARY TO BRACE THE STEEL PLATE GIRDERS AND SUPPORT ANTICIPATED LOADS THROUGHOUT CONSTRUCTION ACTIVITIES ASSOCIATED WITH THE PLACEMENT AND FINISHING OF THE DECK SLAB CONCRETE. ITEM ALSO CONSISTS OF SERVICES BY A PROFESSIONAL ENGINEER LICENSED IN THE STATE OF OKLAHOMA TO DESIGN AND DRAW THE FALSEWORK/BRACING AS NECESSARY FOR THE MEANS, METHODS, AND SEQUENCES CHOSEN BY THE CONTRACTOR. PROVIDE ALL FALSEWORK/BRACING IN ACCORDANCE WITH SECTION 502 OF THE SPECIFICATIONS AND AS SHOWN IN THE PLANS. ALL REMOVED FALSEWORK AND BRACING SHALL BECOME THE PROPERTY OF THE CONTRACTOR.

(BR-4) THE APPROACH SLABS CONTAIN AN ESTIMATED TOTAL OF 68.9 C.Y. OF CLASS AA CONCRETE AND 13,810 LB. OF EPOXY COATED REINFORCING STEEL.

(BR-5) THE FIXED BEARING ASSEMBLIES CONTAIN AN ESTIMATED TOTAL OF 4,500 LB. OF STAINLESS STEEL.

(BR-6) THE EXPANSION BEARING ASSEMBLIES CONTAIN AN ESTIMATED TOTAL OF 11,330 LB. OF STAINLESS STEEL.

(BR-7) ITEM "ELASTOMERIC COATING" CONSISTS OF APPLYING A LIQUID, TWO-COMPONENT URETHANE COATING SYSTEM TO SUBSTRUCTURE CONCRETE SURFACES AS SPECIFIED IN THE NOTES ON SHEET AB01 AND AS SHOWN IN THE PLANS. THERE IS AN ESTIMATED TOTAL OF 347.8 S.F. TOTAL ON THE ABUTMENTS AND 3,130.4 S.F. TOTAL ON THE PIERS. INCLUDE ALL COSTS ASSOCIATED WITH LABOR, MATERIAL, EQUIPMENT AND INCIDENTALS IN THE CONTRACT UNIT PRICE OF "ELASTOMERIC COATING".

(BR-8) THE QUANTITY FOR CLASS AA CONCRETE INCLUDES AN ESTIMATED TOTAL OF 25.3 C.Y. FOR GIRDER HAUNCHES.

(BR-9) PAYMENT TO THE CONTRACTOR WILL BE BASED ON PLAN QUANTITIES UNLESS ADDITIONAL PILING LENGTH IS REQUIRED. ADDITIONAL PILES, FURNISHED, AS AUTHORIZED BY THE ENGINEER, WILL BE PAID FOR AT THE CONTRACT UNIT PRICE.

(BR-10) PERFORM CROSSHOLE SONIC LOGGING ON EACH DRILLED SHAFT.

(BR-11) QUANTITY SHOWN FOR SEALER RESIN ESTIMATED AT 0.011 GALLONS PER FOOT OF CONSTRUCTION JOINT.

(BR-12) INCLUDE THE COST OF PIPE UNDERDRAIN COVER MATERIAL (BOTH FILTER SAND AND COARSE) AND FILTER FABRIC IN THE CONTRACT UNIT PRICE OF "6" PERFORATED PIPE UNDERDRAIN ROUND". INSTALL AS SHOWN IN THE PLANS AND ON STD. PUD-4.

(BR-13) THE ENGINEER MAY ADJUST THE EXTENT, LOCATION AND DEPTH OF NON-PERFORATED PIPE UNDERDRAIN DURING CONSTRUCTION. INCLUDE THE COST OF TRENCH EXCAVATION AND STANDARD BEDDING MATERIAL IN THE CONTRACT UNIT PRICE OF "6" NON-PERF. PIPE UNDERDRAIN RND". INSTALL AS SHOWN IN THE PLANS AND ON STD. PUD-4.

J.P. NO. 10981(05)
0200 BRIDGE
NBI NO. 32255

PAY QUANTITIES

I-44 E.B. TO U.S.169 N.B. RAMP D
48'-56'-(2)78'-(5)88'-104'-88' ℙ GIRDER SPANS
27'-0" CLR. RDWY. WITH F-SHAPED PARAPETS
43° SKEW RT. FWD., ℄ STA. 34+10.32

ITEM NO.	ITEM DESCRIPTION		UNIT	TOTAL
501(B) 1300	SUBSTRUCTURE EXCAVATION COMMON	(BR-1, 2)	C.Y.	945
501(G) 1800	CLSM BACKFILL	(BR-1)	C.Y.	161.3
502(A) 3200	ENGINEERED FALSEWORK	(BR-3)	L.SUM	1
504(A) 5200	APPROACH SLAB	(BR-1, 4)	S.Y.	190.6
504(B) 5300	SAW-CUT GROOVING	(BR-1)	S.Y.	2,849.9
504(E) 5520	42" F-SHAPED PARAPET	(BR-1)	L.F.	1,899.4
506(A) 7200	STRUCTURAL STEEL	(BR-1)	LB.	874,110
507(A) 8200	STAINLESS STEEL FIXED BEARING ASSEMBLY	(BR-1, 5)	EA.	24
507(B) 8300	STAINLESS STEEL EXP. BEARING ASSEMBLY	(BR-1, 6)	EA.	56
509 0120	ELASTOMERIC COATING	(BR-1, 7)	S.F.	3478.2
509(A) 0210	CLASS AA CONCRETE	(BR-1, 8)	C.Y.	695.8
509(B) 0320	CLASS A CONCRETE	(BR-1)	C.Y.	834.9
510(C) 1450	SLOPE WALL (5")	(BR-1)	S.Y.	580
511(B) 2310	EPOXY COATED REINFORCING STEEL	(BR-1)	LB.	310,730
514(A) 5220	PILES, FURNISHED (HP12x53)	(BR-9)	L.F.	485
514(B) 5320	PILES, DRIVEN (HP12x53)		L.F.	485
514(L) 6300	PILE SPLICE, H-PILE (NON-BIDDABLE)		EA.	1
515(A) 7200	WATER REPELLENT (VISUALLY INSPECTED)	(BR-1)	S.Y.	2,250
516(A) 8250	DRILLED SHAFTS 72" DIAMETER		L.F.	147
516(A) 8255	DRILLED SHAFTS 84" DIAMETER		L.F.	82
516(C) 8400	CROSSHOLE SONIC LOGGING	(BR-10)	EA.	10
518(B) 0300	SEALED EXPANSION JOINTS	(BR-1)	L.F.	112.66
523(A) 3200	SEALER CRACK PREPARATION	(BR-1)	L.F.	323
523(B) 3300	SEALER RESIN	(BR-1, 11)	GAL.	3.6
613(H) 6205	6" PERFORATED PIPE UNDERDRAIN ROUND	(BR-12)	L.F.	73
613(I) 6310	6" NON-PERF. PIPE UNDERDRAIN RND.	(BR-13)	L.F.	60

LICENSED PROFESSIONAL ENGINEER
AUGUSTINE F. WUERTZ
29197
OKLAHOMA
7-16-21

I-44 E.B. TO U.S.169 N.B. RAMP D — TULSA COUNTY

GENERAL NOTES & SUMMARY OF PAY QUANTITIES (BRIDGE)
SHEET 2 OF 2

Design	CEG	
Detail	DRB	
Check		

WHITE ENGINEERING ASSOCIATES

STATE OF OKLAHOMA — DEPARTMENT OF TRANSPORTATION
JOB PIECE NO. 10981(05) — SHEET NO. AB02

I:\Active\1611\Drawings\AB02 Pay Items.dwg, 7/16/2021 8:23:08 AM, Deanne

ENVIRONMENTAL MITIGATION NOTES

EARTHWORK NOTE:
THE CONTRACTOR MUST ENSURE THAT ANY MATERIAL INCORPORATED INTO THE PROJECT IS FREE OF ANY HAZARDOUS, INDUSTRIAL OR CONTAMINATED WASTE, REFER TO SUB-SECTIONS 106.01 AND 202.02 OF THE STANDARD SPECIFICATIONS FOR HIGHWAY CONSTRUCTION.

IMPORTED MATERIAL (EG. BORROW) - IF MATERIAL IS IMPORTED TO THE PROJECT AND AT ANY POINT THE MATERIAL IS DETERMINED BY THE ENGINEER TO INCLUDE ANY TYPE OF UNACCEPTABLE CONTAMINATION, THE MATERIAL MAY REQUIRE REMOVAL, IN WHOLE, OR IN PART. IF REMOVAL IS REQUIRED, THEN THE INITIAL PLACEMENT, REMOVAL AND PROPER DISPOSAL OF THIS MATERIAL SHALL BE THE SOLE RESPONSIBILITY OF THE CONTRACTOR. THE DISPOSAL OF THE UNACCEPTABLE MATERIAL SHALL BE APPROVED BY THE ENGINEER, REFER TO SUB-SECTION 107.15 OF THE STANDARD SPECIFICATIONS FOR HIGHWAY CONSTRUCTION.

TO ASSIST THE CONTRACTOR, THE "OFF PROJECT FACILITY/BORROW SITE HAZARDOUS MATERIALS QUESTIONNAIRE" IS PROVIDED ON THE DEPARTMENT'S WEB SITE:

https://oklahoma.gov/content/dam/ok/en/odot/documents/ok-gov-docs/programs-and-projects/environmental/hazard-questionnaire-2016.pdf

THIS QUESTIONNAIRE IS PROVIDED FOR THE CONVENIENCE OF THE CONTRACTOR SO THAT A CLEARER UNDERSTANDING OF THE CHARACTERISTICS OF THE PROPOSED SITE/ MATERIAL IS ACHIEVED. COMPLETION AND SUBMITTAL OF THIS FORM TO THE ENGINEER DOES NOT EXCUSE THE CONTRACTOR FROM PROVIDING MATERIALS THAT ARE FREE OF HAZARDOUS AND INDUSTRIAL COMPOSITION IN ACCORDANCE WITH SUB-SECTIONS 106.01 AND 202.02 OF THE STANDARD SPECIFICATIONS FOR HIGHWAY CONSTRUCTION.

NON-COMPLIANCE NOTE:
FAILURE TO IMPLEMENT THE COMMITMENTS SPECIFIED IN THE PLAN NOTES CAN RESULT IN NON-COMPLIANCE ISSUES ON THE PROJECT. WORK ACTIVITIES MAY BE SUSPENDED ON THE PROJECT, FOR AN UNDETERMINED DURATION, WHILE WORKING WITH REGULATORS TO BRING THE PROJECT BACK INTO COMPLIANCE. THE CONTRACTOR WILL NOT BE COMPENSATED FOR TIME LOST.

WATER QUALITY CONVSERVATION NOTE:
APPROPRIATE BEST MANAGEMENT PRACTICES TO MINIMIZE IMPACTS FROM STORM WATER DISCHARGES AND SEDIMENTATION IN STREAMS, AS ESTABLISHED BY THE OKLAHOMA DEPARTMENT OF ENVIRONMENTAL QUALITY, SHALL BE CONSCIENTIOUSLY IMPLEMENTED THROUGHOUT THE PROPOSED CONSTRUCTION PERIODS, IN ORDER TO MINIMIZE ANY POTENTIAL IMPACTS TO ANY LISTED SPECIES. THE EFFECTIVENESS OF EROSION CONTROLS SHALL BE MAINTAINED FOR THE DURATION OF CONSTRUCTION ACTIVITIES. HAZARDOUS MATERIALS, CHEMICALS, FUELS, LUBRICATING OILS, AND OTHER SUCH SUBSTANCES SHALL BE STORED AT LEAST 100 FEET FROM THE ORDINARY HIGH WATER MARK (OHWM). REFUELING OF CONSTRUCTION EQUIPMENT SHALL ALSO BE CONDUCTED AT LEAST 100 FEET FROM THE OHWMS. SEDIMENT AND EROSION CONTROLS SHALL BE INSTALLED AROUND STAGING AREAS TO PROHIBIT DISCHARGE OF MATERIALS FROM THESE SITES. CONSTRUCTION WASTE MATERIALS AND DEBRIS SHALL BE STOCKPILED AT LEAST 25 FEET OUTSIDE OF THE OHWMS, AND THESE MATERIALS SHALL BE REMOVED AND DISPOSED OF PROPERLY FOLLOWING COMPLETION OF THE PROJECT. PREVENTATIVE MEASURES MUST BE TAKEN TO PROHIBIT THE DISCHARGE OF CONTAMINANTS INTO ANY SURFACE WATERS.

MIGRATORY BIRD NOTE:
MIGRATORY BIRDS ARE PROTECTED BY THE FEDERAL MIGRATORY BIRD TREATY ACT. MANY BIRDS COMMONLY USE BRIDGES AND CULVERTS FOR NESTING. THE NESTING SEASON FOR MOST BIRD SPECIES EXTENDS FROM MARCH 1 TO AUGUST 31. THE PROJECT WAS SURVEYED FOR MIGRATORY BIRD NESTS IN *AUGUST 2019*. ALTHOUGH NO NESTS WERE OBSERVED, THE SURVEY IS VALID ONLY UNTIL THE START OF THE 2020 NESTING SEASON (BEGINNING MARCH 1). THE RESIDENT ENGINEER SHALL CONTACT THE ODOT BIOLOGIST AT 405-210-3671 IF ANY BIRD USE OF THE EXISTING STRUCTURES IS OBSERVED. IF BIRDS ARE OBSERVED THEN PAINTING, REPAIR, RETROFIT, REHABILITATION OR DEMOLITION OF THE EXISTING BRIDGE SHALL BE CONDUCTED BETWEEN SEPTEMBER 1, AND FEBRUARY 28, WHEN MIGRATORY BIRD NESTS ARE NOT OCCUPIED. THE BRIDGE MAY BE PROTECTED FROM NEW NEST ESTABLISHMENT PRIOR TO MARCH 1, BY MEANS THAT DO NOT RESULT IN BIRD DEATH OR INJURY. OPTIONS INCLUDE THE EXCLUSION OF ADULT BIRDS FROM SUITABLE NEST SITES ON OR WITHIN A STRUCTURE BY THE PLACEMENT OF WEATHER-RESISTANT POLYPROPYLENE NETTING WITH 0.25-INCH OR SMALLER OPENINGS, PRIOR TO MARCH 1. METHODS OTHER THAN NETTING MUST BE PRE-APPROVED BY THE ODOT BIOLOGIST.

△2 **BAT LIGHTING NOTE:**
ALL TEMPORARY LIGHTING, IF USED, WILL BE DIRECTED AWAY FROM SUITABLE BAT HABITAT DURING THE ACTIVE SEASON FOR BATS (APRIL 1- NOVEMBER 15). IF ANY PERMANENT LIGHTING IS INSTALLED OR REPLACED, DOWNWARD-FACING FULL CUT-OFF LENS LIGHTS SHALL BE INSTALLED AND DIRECTED AWAY FROM WOODED AREAS AND STREAMS.

Species	Seasonal Restriction Period
None	No restrictions

ENVIRONMENTAL MITIGATION NOTES

RAMP CLOSURE NOTE:
FIELD DISTRICT WILL POST ADVANCED MESSAGE SIGNS AND DO MEDIA RELEASE OF RAMP CLOSURES PRIOR TO CLOSURES.

REVISIONS

REV. NO.	DESCRIPTION	DATE
△1	ADDED SHEET	4-11-2022
△2	ADDED NOTE	4-29-2022

ENVIRONMENTAL NOTES

DETAIL
REVIEW
APPROVED
ENVIRONMENTAL DIVISION

STATE OF OKLAHOMA | DEPARTMENT OF TRANSPORTATION
JOB PIECE NO. 10981(05) | SHEET NO. AE01

REV. NO.	DESCRIPTION REVISION	DATE
1	REVISE PROJECT NUMBER	05-03-2022

10981(05)
0100
ROADWAY

PAY QUANTITIES

ITEM	DESCRIPTION		UNIT	QUANTITY
201(A)1200	CLEARING AND GRUBBING		LSUM	1.00
202(A)2200	UNCLASSIFIED EXCAVATION	(R-1)	CY	7,085.00
202(D)2500	UNCLASSIFIED BORROW		CY	23,324.00
202(E)2600	SELECT BORROW	(1)	CY	432.00
205(A)6200	TYPE A-SALVAGED TOPSOIL	(R-4) (R-6)	LSUM	1.00
221(B)2300	TEMPORARY SILT FENCE	(R-8)	LF	7,000.00
221(E)2600	TEMPORARY SILT DIKE	(R-8)	LF	448.00
221(G)2800	TEMPORARY FIBER LOG	(R-8)	LF	840.00
230(A)7200	SOLID SLAB SODDING	(R-6)(R-7)	SY	31,690.00
232(B)9300	SEEDING METHOD B	(R-6) (14)	AC	46.00
233(A)0200	VEGETATIVE MULCHING	(R-6)(R-11)	AC	6.00
241 3100	MOWING	(R-15)	AC	12.00
303(A)1200	AGGREGATE BASE TYPE A	(2)	CY	247.00
307(K)4200	STABILIZED SUBGRADE	(3)	SY	31,044.00
317 7100	CEMENT TREATED BASE		SY	30,209.00
325 0100	SEPARATOR FABRIC		SY	8,008.00
326(B)1300	GEOGRID REINFORCEMENT	(4)	SY	388.00
402(E)2600	TRAFFIC BOUND SURFACE COURSE TYPE E	(R-18)	TON	960.00
407(B)7300	TACK COAT	(5)	GAL	732.00
411(B)1330	SUPERPAVE, TYPE S3 (PG 64-22 OK)	(R-25)	TON	840.00
411(C)1400	SUPERPAVE, TYPE S4(PG 76-28 OK)	(R-25)	TON	1,140.00
411(C)1430	SUPERPAVE, TYPE S4(PG 64-22 OK)	(R-25)	TON	280.00
412 3100	COLD MILLING PAVEMENT		SY	4,775.00
414(A)5200	P.C.CONCRETE PAVEMENT(PLACEMENT)		SY	11,214.00
414(B)5300	DOWEL JOINTED P.C.C.PAVT.(PLACEMENT)		SY	16,999.00
414(G)5800	P.C. CONCRETE FOR PAVEMENT		CY	7,591.00
504(E)5500	CONCRETE PARAPET		LF	758.50
504(E)5520	42" F-SHAPED PARAPET		LF	2,919.37
509(B)0310	CLASS A CONCRETE(LONG. BAR. DES. 1-A)		CY	67.00
509(C)0400	CLASS A CONCRETE, SMALL STRUCTURES		CY	8.00
509(D)0500	CLASS C CONCRETE	(R-31)(6)	CY	261.00
510(C)1440	SLOPE WALL (5")		SY	305.00
510(D)1500	GRAFFITI TREATMENT	(7)	SF	10,340.00
510(D)1510	MSE RETAINING WALL	(8)	SY	1,147.00
511(A)2200	REINFORCING STEEL		LB	426.00
511(B)2300	EPOXY COATED REINFORCING STEEL	(9)	LB	91,530.00
609(A)4220	CONC.CURB(4" MNTBLE-INTEGRAL)		LF	7,705.00
609(A)4260	CONC CURB(6" MNTBLE-DOWELLED)		LF	109.00
610(C)5400	4" CONCRETE DIVIDING STRIP		SY	192.00
611(A)7210	MANHOLE (4' DIA.)	(R-33)	EA	1.00
611(G)0354	INLET (SMD-TYPE 2)	(R-33)	EA	1.00
611(G)7754	INLET CI DES. 2 (STD)	(R-32)(R-33)	EA	2.00
611(G)7786	INLET CI DES. 3 (STD)	(R-32)(R-33)	EA	3.00
611(G)7930	INLET GPI TYPE 1 (DES. 1)		EA	1.00
611(G)7958	INLET GPI TYPE 2 (DES. 8)		EA	1.00
611(G)8155	INLET - LONG. BARRIER - TYPE I, DES.2		EA	9.00
611(H)0414	ADD'L DEPTH IN INLET CI DES. 2	(R-33)	VF	0.21
611(H)0422	ADD'L DEPTH IN INLET CI DES. 3	(R-33)	VF	3.45
611(L)1600	JUNCTION BOXES		CF	36.35
613(A)5204	15" R.C.PIPE CLASS III		LF	308.00
613(A)5208	18" R.C.PIPE CLASS III		LF	56.00
613(A)5216	24" R.C.PIPE CLASS III		LF	4.00
613(H)6200	6" PERFORATED PIPE UNDERDRAIN ROUND	(10)	LF	500.00
613(I)6305	6" NON-PERF.PIPE UNDERDRAIN RND.	(10)	LF	250.00
613(J)6400	EDGE DRAIN CONDUIT-PERFORATED	(11)	LF	6,640.00
613(K)6500	EDGE DRAIN OUTLET LATERAL-NONPERFORATED	(11)	LF	560.00
613(L)6704	15" PREFAB. CULVERT END SEC., ROUND		EA	1.00
613(L)6708	18" PREFAB. CULVERT END SEC., ROUND		EA	1.00
613(Q)7500	OUTLET LATERAL HEADWALL		EA	5.00
613(S)7700	STANDARD BEDDING MATERIAL, CLASS B		CY	107.00
613(U)7950	PIPE UNDERDRAIN COVER MAT'L.	(12)	CY	60.00
613(V)8000	TRENCH EXCAVATION		CY	177.00

10981(05)
0100
ROADWAY

PAY QUANTITIES(CONTINUED)

ITEM	DESCRIPTION		UNIT	QUANTITY
619(A)6200	REMOVAL OF STRUCTURES & OBSTRUCTIONS	(R-36,R-37)	LSUM	1.00
619(B)6356	REMOVAL OF CURB AND GUTTER	(R-37,R-38)	LF	1,076.00
619(B)6360	REMOVAL OF CONCRETE PAVEMENT	(R-37,R-38)	SY	5,756.00
619(B)6364	REMOVAL OF ASPHALT PAVEMENT	(R-37,R-38) (13)	SY	4,607.00
619(B)6368	REMOVAL OF DRAINAGE INLETS	(R-37,R-38)	EA	15.00
619(B)6376	REMOVAL OF CONC.PAV.W/ASPH.OVERLAY	(R-37,R-38)	SY	12,212.00
619(B)6396	REMOVAL OF GUARDRAIL	(R-37)	LF	100.00
619(B)6416	REMOVAL OF CONCRETE MEDIAN BARRIER	(R-37,R-38)	LF	529.00
619(B)6436	REMOVAL OF CONCRETE DITCH LINER	(R-37,R-38)	LF	105.00
619(B)6440	REMOVAL OF EXISTING PIPE	(R-37,R-38)	LF	170.00
619(C)6600	SAWING PAVEMENT		LF	6,462.00
627(A)6200	CONCRETE LONGITUDINAL BARRIER, DESIGN 1		LF	393.92
627(B)6300	CONCRETE LONGITUDINAL BARRIER END SEC.		EA	1.00

1

MANDATORY TIED PROJECTS:

THE FOLLOWING PROJECTS WILL BE MANDATORILY TIED:
1. PROJECT NO. SSP-4400(096)PM, STATE JOB PIECE NO. 10981(05), TULSA COUNTY I-44/US-169 INTERCHANGE
2. PROJECT NO. SBR-4400(075)SB, STATE JOB PIECE NO. 33448(04), TULSA COUNTY US-169 OVER I-44

THE COST OF CONSTRUCTION STAKING AND MOBILIZATION FOR THE TWO PROJECTS SHALL BE INCLUDED IN THE PAY ITEM FOR CONSTRUCTION STAKING AND MOBILIZATION PROVIDED ON PROJECT NO. SSP-4400(096)PM, STATE JOB PIECE NO. 10981(05)

10981(05)
0600
STAKING

PAY QUANTITIES

ITEM	DESCRIPTION	UNIT	QUANTITY
642(B)3300	CONSTRUCTION STAKING LEVEL II	LSUM	1.00

10981(05)
0640
CONSTRUCTION

PAY QUANTITIES

ITEM	DESCRIPTION	UNIT	QUANTITY
220 1100	SWPPP DOCUMENTATION AND MANAGEMENT	LSUM	1.00
641 2110	MOBILIZATION	LSUM	1.00

STANDARD ROADWAY PAY ITEM NOTES

(R-1) PAYMENT FOR THIS ITEM WILL BE BASED ON PLAN QUANTITY ONLY. SEE SECTION 109.01B OF THE STANDARD SPECIFICATIONS.

(R-4) AN ESTIMATED QUANTITY OF 4,400 C.Y. TOPSOIL TO BE RESERVED FOR REPLACEMENT OF APPROXIMATELY 5" ON COMPLETED FORESLOPES, DITCHES, AND BACKSLOPES. THIS QUANTITY IS INCLUDED IN THE EARTHWORK BALANCE. ANY ADDITIONAL EXCAVATION REQUIRED IN CUT SECTIONS TO ALLOW FOR PLACEMENT OF TOPSOIL TO FINAL GRADE, SHALL BE INCLUDED IN THE PRICE BID.

(R-6) FOR SOLID SLAB SODDING, PRICE BID TO INCLUDE COST OF 10-20-10 FERTILIZER, ESTIMATED AT 200 POUNDS PER 1000 SY.

FOR SEEDING METHOD B PRICE BID TO INCLUDE COST 10-20-10 FERTILIZER, ESTIMATED AT 150 POUNDS PER ACRE OF SEEDING.

FOR TYPE A-SALVAGED TOPSOIL, PRICE BID TO INCLUDE COST OF 18-46-0 FERTILIZER, ESTIMATED AT 150 POUNDS PER ACRE.

(R-7) FOR SOLID SLAB SODDING,PRICE BID TO INCLUDE COST OF WATERING, ESTIMATED AT 40 GALLONS PER SY.

(R-8) PRICE BID TO INCLUDE COST OF ALL NECESSARY MAINTENANCE, MAINTAINING DEVICE IN PROPER UPRIGHT POSITION, REMOVAL OF DEVICE, AND REMOVAL OF SEDIMENT WHEN IT REACHES HALF THE HEIGHT OF THE DEVICE.

(R-11) THE QUANTITIES ESTIMATED FOR TEMPORARY EROSION AND SEDIMENT CONTROL IS 9.6 ACRES.

(R-15) QUANTITY BASED ON TWO APPLICATIONS.

(R-18) ESTIMATED AT 140 LBS. PER CU. FT.

(R-25) ESTIMATED AT 112 LBS. PER SQ. YD. PER 1" THICK.

(R-31) QUANTITY INCLUDES AN ESTIMATED 100 C.Y. TO BE USED AS DIRECTED BY THE ENGINEER.

(R-32) PRICE BID TO INCLUDE COST OF 16 - 4" MOUNTABLE CURB HOODS, 0 - 6" MOUNTABLE CURB HOODS, 0 - 6" BARRIER CURB HOODS, 0 - 8" BARRIER CURB HOODS.

(R-33) THE PRECAST CONCRETE OPTION MAY BE USED INSTEAD, PER DIRECTION OF THE ENGINEER.

(R-37) INCLUDES REMOVAL OF ALL EXISTING ROADWAY DRAINAGE STRUCTURES, HEADWALLS (UNLESS OTHERWISE SPECIFIED), INLETS, FENCES, AND OTHER STRUCTURES WITHIN THE RIGHT OF WAY.

(R-38) TO BECOME THE PROPERTY OF AND BE DISPOSED OF BY THE CONTRACTOR IN A MANNER APPROVED BY THE ENGINEER.

(R-39) MATERIALS REMOVED SHALL NOT BE MEASURED FOR PAYMENT UNDER SECTION 202.06 UNCLASSIFIED EXCAVATION.

SPECIAL ROADWAY PAY ITEM NOTES

(1) TO BE USED AS SAND BACKFILL BEHIND BARRIER WALL FOR BRIDGE PIER PROTECTION. SEE SHEETS RO32 AND RO33.

(2) MEASUREMENT WILL BE BASED ON THE THEORETICAL CROSS-SECTION SHOWN ON THE TYPICAL SECTION, MULTIPLIED BY THE ACTUAL LENGTH.

(3) PRICE BID TO INCLUDE THE CHEMICAL ADDITIVE(S) TO ACHIEVE THE RATE SPECIFIED FOR THE APPROPRIATE SOIL CLASSIFICATION AS SPECIFIED IN THE MOST CURRENT ODOT MATERIALS DIVISION OHD L-50. IT IS THE RESPONSIBILITY OF THE CONTRACTOR TO CORRECTLY CLASSIFY THE SOIL AND DETERMINE THE APPROPRIATE ADDITIVE(S).

(4) GEOGRID SHALL MEET 712.07, TABLE 712.2, "TYPE 2"

(5) ESTIMATED AT 0.075 GAL PER SY PRIOR TO DILUTION.

(6) QUANTITY INCLUDES 153 CY FOR PAVED DITCH AND 8 CY FOR FLUME.

(7) WALL "A"=1,870 SF, WALL "B"=3,080 SF, AND WALL "C"=5,390 SF

(8) WALL "A"=207 SY, WALL "B"=342 SY, AND WALL "C"=598 SY.

(9) REINFORCING STEEL IN P.C. CONCRETE AND DOWEL JOINTED P.C. CONCRETE PAVEMENT AT PARAPET WALL LOCATIONS.

(10) ESTIMATED QUANTITY TO BE USED AS DIRECTED BY THE ENGINEER.

(11) 6" DIAMETER

(12) ESTIMATED QUANTITY TO BE USED WITH PIPE UNDERDRAIN AS DIRECTED BY THE ENGINEER.

(13) INCLUDES 2,495 SY FOR RAMP "G" DETOUR.

(14) PRICE BID FOR TEMPORARY SEEDING SHALL INCLUDE WATERING AS REQUIRED TO ESTABLISH AND MAINTAIN PLANTING.

TEMPORARY SEEDING MIX SHALL BE AS FOLLOWS:

KINDS OF SEEDS TO BE FURNISHED	QUANTITY PER ACRE
PERENNIAL RYE GRASS (LODIUM PERENNE)	20 LBS. OF SEED
CRIMSOM CLOVER (TRIFOLUM INCARNATUM)	12 LBS. OF SEED

REGISTERED PROFESSIONAL ENGINEER
RODNEY D. SEWELL
16173
OKLAHOMA
9/17/21

Design	CKS	
Drawn	CKD	
Checked	CKE	
Approved		
Squad	C & K	

INTERCHANGE (OPERATIONAL IMPROVEMENTS) TULSA COUNTY

PAY QUANTITY AND NOTES (ROADWAY)

JOB PIECE NO. 10981(05) SHEET NO. AR01

ROADWAY GENERAL CONSTRUCTION NOTES

IN ACCORDANCE WITH THE OKLAHOMA UNDERGROUND FACILITIES DAMAGE PREVENTION ACT THE CONTRACTOR SHALL NOTIFY THE OKLAHOMA ONE-CALL SYSTEM, INC. 48 HOURS PRIOR TO BEGINNING EXCAVATION. OKLAHOMA ONE-CALL SYSTEM, INC. "CALL OKIE" 1-800-522-6543 OR 811.

MAINTENANCE OF THROUGH TRAFFIC INCLUDES THE MAINTENANCE OF THE EXISTING ROAD IN CLOSE PROXIMITY TO THE NEW CONSTRUCTION AS SHOWN ON THE PLANS.

FOR PROJECTS THAT INCLUDE WIDENING AND/OR RESURFACING, THE CONTRACTOR SHALL SCHEDULE OPERATIONS TO MINIMIZE POTENTIAL DROP-OFF HAZARDS AND SHALL SUBMIT A SEQUENCE OF CONSTRUCTION OPERATIONS TO THE RESIDENT ENGINEER FOR APPROVAL BEFORE OPERATIONS BEGIN. ANY PORTION OF THE CONSTRUCTION OPERATIONS, SUCH AS SUPERPAVE LAYING OPERATIONS, EXCAVATION FOR PAVEMENT WIDENING, OR EXTENSION OF ROADWAY STRUCTURES, SHALL BE LIMITED TO ONE SIDE AT A TIME, AND THE PROCEDURES OUTLINED IN THE PAVEMENT DROP-OFF TREATMENT STANDARD PDT-1 (LATEST REVISION) SHALL BE IMPLEMENTED. ONLY THAT AMOUNT OF OPEN TRENCH WILL BE ALLOWED THAT CAN BE SURFACED IN 1 (ONE) DAY'S TIME WITHOUT APPROVAL BY THE ENGINEER. LIGHTS, SIGNS AND BARRICADES SHALL BE MOVED AS WORK PROGRESSES.

ALL TREES, BRUSH, AND OTHER DEBRIS THAT MIGHT INTERFERE WITH THE FLOW OF WATER SHALL BE CLEANED OUT TO THE RIGHT-OF-WAY LINE, AT EACH STRUCTURE AND BRIDGE, IN A MANNER APPROVED BY THE ENGINEER. ALL COST TO BE INCLUDED IN OTHER ITEMS OF WORK.

ALL FLOWLINES THAT ARE TO BE FILLED SHALL BE THOROUGHLY TAMPED BEFORE CONSTRUCTION OR EXTENSION OF DRAINAGE STRUCTURES. ALL COST TO BE INCLUDED IN OTHER ITEMS OF WORK.

IN ORDER TO ALLEVIATE DUST CONDITIONS DURING GRADING OPERATIONS AND BEFORE PAVEMENT WORK IS COMPLETED, THE CONTRACTOR SHALL SPRINKLE GRADING AT INTERVALS APPROVED BY THE ENGINEER. ALL COST TO BE INCLUDED IN OTHER ITEMS OF WORK.

THE CONTRACTOR SHALL NOT WASTE ANY EXCESS EXCAVATION UNTIL ALL PLANNED EMBANKMENTS AND BACKFILLS ARE COMPLETED. EXCESS UNCLASSIFIED EXCAVATION MATERIAL DETERMINED BY THE ENGINEER TO BE SUITABLE FOR BACKFILL SHALL BE USED TO REDUCE ANY UNCLASSIFIED BORROW NEEDED. COST OF SECOND HANDLING SHALL BE INCLUDED IN OTHER ITEMS OF WORK. ANY REMAINING EXCESS EXCAVATION SHALL BECOME THE PROPERTY OF THE CONTRACTOR AND BE DISPOSED OF IN A MANNER APPROVED BY THE ENGINEER.

THE CONTRACTOR SHALL KEEP THE OPEN TRENCH DRAINED. COST TO BE INCLUDED IN OTHER ITEMS OF WORK.

TEMPORARY SEEDING MIX SHALL BE AS FOLLOWS:

KINDS OF SEED TO BE FURNISHED	QUANTITY PER ACRE
PERENNIAL RYE GRASS (LODIUM PERENNE)	20 LBS.
CRIMSON CLOVER (TRIFOLUM INCARNATUM)	12 LBS.

VEGETATIVE MULCHING: THE VEGETATIVE MULCH SHALL BE ANCHORED IN ACCORDANCE WITH THE "MULCHING-TILLER METHOD", AS SPECIFIED IN 233.04B(1) OF THE STANDARD SPECIFICATIONS.

THE PLANTING OF TEMPORARY SEEDS SHALL BE RESTRICTED TO THE PERIOD FROM SEPTEMBER 15 TO NOVEMBER 15.

AREAS ON WHICH SALVAGED TOPSOIL IS TO BE REPLACED SHALL HAVE 0 - 46 - 0 FERTILIZER APPLIED, AT THE RATE OF 150 POUNDS PER ACRE, JUST PRIOR TO THE REPLACEMENT OF SALVAGED TOPSOIL.

PIPE UNDERDRAIN QUANTITIES ESTIMATED ONLY. LOCATION, IF AND WHERE REQUIRED, TO BE DETERMINED BY THE ENGINEER.

THE CONTRACTOR SHALL REMOVE AND RESET MAILBOXES AS NECESSARY. MAILBOXES ARE TO BE MAINTAINED IN AN UPRIGHT POSITION AND ACCESSIBLE TO MAIL CARRIER'S CAR DURING CONSTRUCTION. ANY DAMAGE TO BOXES OR SUPPORTS SHALL BE REPAIRED BY THE CONTRACTOR. ALL COST TO BE INCLUDED IN OTHER ITEMS OF WORK.

SURFACING OF RETURNS, UNLESS OTHERWISE SHOWN ON THE PLANS, SHALL BE OF THE SAME MATERIAL (BASE AND SURFACE) AS THAT OF THE ABUTTING SHOULDER OF THE MAINLINE. BASE AND SURFACE THICKNESS SHALL BE THE THICKNESS SHOWN ON PLANS.

T.B.S.C. SURFACES SHALL BE SPRINKLED WITH WATER AND ROLLED WITH A PNEUMATIC ROLLER IN A MANNER APPROVED BY THE ENGINEER.

REGISTERED PROFESSIONAL ENGINEER
RONALD L. SEWELL
16173
OKLAHOMA
9/17/21

Design	CKS	
Drawn	CKD	
Checked	CKE	
Approved		
Squad	C & K	

INTERCHANGE (OPERATIONAL IMPROVEMENTS) TULSA COUNTY

GENERAL NOTES (ROADWAY)

JOB PIECE NO. 10981(05) SHEET NO. AR02

S:\Projects\ODOT\2015 EC-1710 I-44-169 Interchange\ACAD\PS&E\Plans\AR02-1098105- General Notes (Roadway).dwg, 11X17, 9/17/2021 3:08:22 PM

0300 TRAFFIC - SIGNING AND STRIPING			
ITEM	DESCRIPTION	UNIT	QTY
804(A) 2200	STRUCTURAL CONCRETE	CY	14
804(B) 2300	REINFORCING STEEL	LB	1667
805(A) 3236	(PL) REMOVAL OF OVERHEAD SIGN STRUCTURE (TS-39)(SP-2)	EA	1
805(A) 3252	(PL) REMOVAL OF EXISTING SIGNS (TS-34)(TS-41)	EA	57
805(D) 3532	(PL) REMOVE & RESET OVERHEAD SIGN STR.	EA	1
850(A) 1200	SHEET ALUMINUM SIGNS (TS-33)(TS-34)	SF	894
850(B) 1310	EXTRUDED ALUMINUM PANEL SIGNS	SF	231
850(B) 1320	EXTR. ALUM. PAN. SGN. (OVRHD SIGNS)	SF	482
851(A) 2200	4"@13 GALV.STL.WD.FLANGE BM.POST (TS-33)	LF	102
851(B) 2310	2 1/2" @5.79 GALV. STL. PIPE POST (TS-33)	LF	1020
851(B) 2315	3"@7.58 GALV.STL.PIPE POST (TS-33)	LF	17
851(C) 2415	2" SQUARE TUBE POST (TS-33)	LF	350
852(D) 3544	OVHD. SN. STR., MONOTUBE TYPE B 110' (SP-3)	EA	1
856 (A) 8204	TRAFFIC STRIPE (MULTI-POLY.)(6" WIDE) (TS-25)	LF	63573
856 (A) 8208	TRAFFIC STRIPE (MULTI-POLY.)(8" WIDE) (TS-26)	LF	5058
856 (A) 8212	TRAFFIC STRIPE (MULTI-POLY.)(12" WIDE) (TS-27)	LF	2448
856 (B) 8304	TRAFFIC STRIPE (MULTI-POLY.)(ARROWS)	EA	6
856 (B) 8308	TRAFFIC STRIPE (MULTI-POLY.)(SYMBOLS)	EA	10
856 (B) 8312	TRAFFIC STRIPE (MULTI-POLY.)(WORDS)	EA	6
858 (A) 0260	PAVE.MARKERS CLASS C TYPE 2	EA	133
870 (C) 1300	SAND FILLED IMPACT ATTEN. MODULE REMOVAL	LSUM	1
871 (A) 2210	(PL) IMPACT ATTENUATOR (SP-1)	EA	6

SIGNING AND STRIPING QUANTITES FOR MANDATORY TIED STATE JOB PIECE NO. 33448(04) ARE INCLUDED IN THESE PAY ITEMS

TRAFFIC OPERATIONS GENERAL NOTES

ALL TEMPORARY TRAFFIC CONTROL DEVICES SHALL MEET ODOT'S QUALITY STANDARDS FOR TEMPORARY TRAFFIC DEVICES.

THE CONTRACTOR SHALL PROVIDE A PERSON TO BE ON 24 HOUR CALL AS NEEDED AS DETERMINED BY THE ENGINEER. THIS PERSON SHALL HOLD A CURRENT CERTIFICAION FROM THE AMERICAN TRAFFIC SAFETY ASSOCIATION (ATSSA) OR THE OKLAHOMA ENGINEERING ASSOCIATION (OTEA) AS THE TRAFFIC CONTROL TECHNICIAN OR TRAFFIC CONTROL SUPERVISOR.

TRAFFIC CONSTRUCTION PAY QUANTITY NOTES

(TC-14) SEE STANDARD DRAWING PM1-1, PM2-1, PM3-1, PM4-1, PM5-1, PM6-1, PM7-1, PM8-1 (LATEST REVISION). A PART, OR ALL, OF THE QUANTITY SHOWN IS TO BE USED AS FINAL PAVEMENT MARKING.

TRAFFIC OPERATIONS CONSTRUCTION NOTES

(C-1) ANY SIGNS AND/OR DELINEATORS WHICH ARE TO BE REMOVED DURING THIS PROJECT WILL BE STORED IN A PROTECTED AREA DESIGNATED BY THE RESIDENT ENGINEER, UNTIL SUCH A TIME THAT THEY ARE TO BE RESET BY THE CONTRACTOR. COST OF THIS WORK TO BE INCLUDED IN OTHER ITEMS OF WORK.

(C-2) EXISTING ROADWAY SHALL REMAIN OPEN DURING CONSTRUCTION. THE CONTRACTOR SHALL BE RESPONSIBLE FOR PROPER BARRICADES, LIGHTS, AND SIGNING WITHIN THE LIMITS OF CONSTRUCTION. ALL CONSTRUCTION SIGNING WILL BE IMPLEMENTED ACCORDING TO CONSTRUCTION PLANS. CONSTRUCTION TRAFFIC CONTROL WILL BE INSTALLED IN A MANNER APPROVED BY THE ENGINEER, IN ACCORDANCE WITH CHAPTER VI OF THE MANUAL ON UNIFORM TRAFFIC CONTROL DEVICES, (CURRENT EDITION), AND COMPLIANT WITH APPLICABLE O.D.O.T. STANDARD DRAWINGS.

(C-3) THIS PROJECT SHALL BE CONSTRUCTED WITHOUT CLOSING TRAFFIC ON CROSS STREETS. A MINIMUM OF ONE LANE IN EACH DIRECTION SHALL BE MAINTAINED AT ALL TIMES.

(C-4) FIVE (5) WORKING DAYS PRIOR TO THE START OF CONSTRUCTION ON THIS PROJECT, THE RESIDENT ENGINEER SHALL CONTACT THE OKLAHOMA HIGHWAY PATROL, SIZE AND WEIGHTS SECTION (405)-425-2210 AND ADVISE THE OFFICE WHEN SAID DETOURING WILL BEGIN AND THAT WIDE LOADS OVER 12 FT. SHOULD BE ADVISED AND RESTRICTED. UPON COMPLETION OF THE PROJECT, THE RESIDENT ENGINEER SHALL CONTACT THE OKLAHOMA HIGHWAY PATROL AND ADVISE THE OFFICE THAT THE PROJECT IS COMPLETE.

(C-5) FIVE (5) WORKING DAYS PRIOR TO DETOURING WIDE LOAD VEHICLES, FOR THE CONSTRUCTION OF THE PROJECT, THE RESIDENT ENGINEER SHALL CONTACT THE OKLAHOMA HIGHWAY PATROL, SIZE AND WEIGHTS SECTION (405)-425-2210 AND ADVISE THE OFFICE WHEN SAID DETOURING WILL BEGIN AND THAT WIDE LOADS OVER 12 FT. SHOULD BE ADVISED AND RESTRICTED (SEE PLANS FOR PROPOSED WIDE LOAD DETOUR ROUTE). UPON COMPLETION OF THE PROJECT THE RESIDENT ENGINEER SHALL CONTACT THE OKLAHOMA HIGHWAY PATROL AND ADVISE THE OFFICE THAT THE WIDE LOAD DETOUR IS NO LONGER IN EFFECT.

(C-6) THE STRUCTURAL DESIGN OF ALL POLES, MAST ARMS, HIGH-MAST POLES, AND OTHER SUPPORTS FOR SIGNS, LUMINAIRES, AND SIGNALS AS WELL AS THEIR CONNECTIONS SHALL BE IN ACCORDANCE WITH THE LATEST EDITION OF THE AASHTO STANDARD SPECIFICATIONS FOR STRUCTURAL SUPPORTS FOR HIGHWAY SIGNS, LUMINAIRES, AND TRAFFIC SIGNALS. THE MANUFACTURER SHALL ENSURE THE FOLLOWING ARE APPLIED TO THE DESIGN:

THE MINIMUM DESIGN WIND SPEED AND DESIGN LIFE AS REQUIRED IN THE AASHTO SPECIFICATIONS.

THE CALCULATED STRESSES AND FORCES FROM THE DESIGN LOADINGS DO NOT EXCEED THOSE REQUIRED IN THE AASHTO SPECIFICATIONS.

A CATEGORY I FATIGUE IMPORTANCE FACTOR (IF) FOR ALL STRUCTURES; NO VIBRATORY MITIGATION SHALL BE ALLOWED. TRUCK-INDUCED GUSTS SHALL BE APPLIED TO ALL OVERHEAD TRAFFIC SIGNAL SUPPORTS.

ALL MEMBERS ARE AT LEAST THE MINIMUM THICKNESS AS REQUIRED IN THE AASHTO SPECIFICATIONS.

LUMINAIRE MAST ARMS SHALL BE DESIGNED TO SUPPORT AT LEAST A 50 LB. (22.7 KG) LUMINAIRE WITH AN EFFECTIVE PROJECTED AREA OF 2.5 FT2 (0.23 M2);

THE ANCHOR BOLT DESIGN AND AMOUNT OF ANCHOR BOLTS TO BE USED SHALL BE AS REQUIRED IN THE AASHTO SPECIFICATIONS.

SIGNAL MAST ARMS AND POLES SHALL BE DESIGNED FOR SPECIFIC SIGNAL HEAD AND SIGN PLACEMENT.

UNLESS SITE SPECIFIC GEOTECHNICAL DATA IS AVAILABLE, FOUNDATIONS SHALL BE DESIGNED UTILIZING THESE PARAMETERS; SHEAR STRENGTH OF COHESIVE SOIL (C) OF 500 PSF, ANGLE OF INTERNAL FRICTION (Φ) OF 22 DEGREES, AND EFFECTIVE UNIT WEIGHT OF SOIL (Γ) OF 120 PCF.

MINIMUM HAND HOLE SIZE OF 3 INCH WIDTH BY 5 INCH HEIGHT.

TRAFFIC SIGNING GENERAL CONSTRUCTION NOTES

(C-51) REMOVED MATERIAL TO BECOME PROPERTY OF CONTRACTOR AND IT SHALL BE DISPOSED OF IN A MANNER APPROVED BY THE ENGINEER.

(C-52) THIS PROJECT SHALL BE CONSTRUCTED WITHOUT CLOSING THE EXISTING ROAD TO LOCAL AND THROUGH TRAFFIC. SEE O.D.O.T. STANDARDS AND DETAIL DRAWINGS FOR MAINTENANCE OF LOCAL AND THROUGH TRAFFIC.

(C-53) ANY DAMAGE CAUSED BY THE CONTRACTOR TO ANY STRUCTURES, ROADWAY SURFACES, STRIPING, RAISED PAVEMENT MARKERS, GUARDRAIL, SLOPES, AND SIGNS SHALL BE REPAIRED AT CONTRACTOR'S EXPENSE TO THE SATISFACTION OF THE ENGINEER.

(C-54) THIS PROJECT SHALL BE CONSTRUCTED WITHOUT CLOSING TRAFFIC ON CROSS STREETS. A MINIMUM OF ONE LANE IN EACH DIRECTION SHALL BE MAINTAINED AT ALL TIMES. SEE O.D.O.T. STANDARDS AND DETAIL DRAWINGS FOR MAINTENANCE OF LOCAL AND THROUGH TRAFFIC.

(C-56) ALL REGULATORY SIGNS SHALL HAVE HIGH INTENSITY SHEETING. THE HIGH INTENSITY SHEETING SHALL MEET THE REQUIREMENTS OF ASTM D4956-(LATEST REVISION) FOR TYPE IV SHEETING. ALL WARNING SIGNS SHALL HAVE FLUORESCENT YELLOW SHEETING. THE FLUORESCENT YELLOW SHEETING SHALL MEET THE REQUIREMENTS OF ASTM D4956- (LATEST REVISION) REQUIREMENTS FOR TYPE XI SHEETING. ALL GREEN AND BLUE SIGNS ON CONVENTIONAL HIGHWAYS SHALL HAVE HIGH INTENSITY SHEETING. THE HIGH INTENSITY SHEETING SHALL MEET THE REQUIREMENTS OF ASTM D4956-(LATEST REVISION) FOR TYPE IV SHEETING. ALL PANEL AND OVERHEAD SIGNS SHALL HAVE TYPE IV HIGH INTENSITY BACKGROUND WITH TYPE XI LEGENDS AND BORDERS. THE TYPE IV BACKGROUND AND THE TYPE XI LEGENDS AND BORDERS SHALL MEET THE REQUIREMENTS OF ASTM D4956 (LATEST REVISION). THE MANUFACTURER SHALL FURNISH A TYPE 'A' CERTIFICATION IN ACCORDANCE WITH ODOT STANDARD SPECIFICATIONS, LATEST EDITION, and SUBSECTION 106.04. THE CERTIFICATION SHALL INCLUDE TEST RESULTS ON THE MATERIAL SUBMITTED FOR APPROVAL.

(C-57) ALL BROKEN CONCRETE INCLUDING OLD SIGN FOOTINGS WITH STUBS, WASTE MATERIAL AND DEBRIS SHALL BECOME THE PROPERTY OF THE CONTRACTOR AND SHALL BE REMOVED FROM THE LIMITS OF THE PROJECT AND DISPOSED OF IN AN AREA APPROVED BY THE ENGINEER. NO PAYMENT SHALL BE MADE FOR THE DISPOSAL OF THIS MATERIAL. ANY PIPE POST OR WIDE FLANGE POST ABOVE THE OLD SIGN FOOTINGS SHALL BE CUT AND HANDLED AS PROPERTY OF THE STATE AND SHALL BE NEATLY STACKED ON THE JOB SITE, AS DESIGNATED BY THE ENGINEER UNTIL SUCH TIME AS DIVISION PERSONNEL CAN REMOVE THE MATERIAL FROM THE JOB SITE.

(C-58) NO SPLICES SHALL BE PERMITTED IN ANY PIPE OR WIDE FLANGE SIGN POSTS.

(C-59) ALL ANCHOR BOLTS SHALL BE GRADE A-36 STEEL.

(C-60) THE STATIONS AND LOCATIONS OF THE SIGN PLACEMENT, AS SHOWN ON THE PLAN SHEETS, ARE APPROXIMATE. EXACT STATIONS AND LOCATIONS SHALL BE DETERMINED BY THE CONTRACTOR SO THAT THE SIGN IS INSTALLED IN ACCORDANCE WITH DEPARTMENT STANDARDS AND THE MUTCD IN ORDER TO PROVIDE OPTIMUM VISIBILITY TO THE ONCOMING/APPROACHING MOTORIST. IF A PROPOSED LOCATION CONFLICTS WITH OTHER SIGNS, UTILITIES OR OTHER ROADWAY FEATURES, THE ENGINEER SHALL BE NOTIFIED.

(C-61) POST LENGTHS SHOWN ON SIGN SUMMARY ARE APPROXIMATE, EXACT LENGTH SHALL BE DETERMINED BY FIELD SURVEY BY THE CONTRACTOR.

(TS-1) "REMOVAL OF SIGN FOOTINGS" SHALL MEAN THE REMOVAL OF AN EXISTING FOOTING WITH OR WITHOUT STUBS AND SHALL BE DISPOSED OF AS NOTED IN GENERAL CONSTRUCTION NOTES.

(TS-9) LENGTH OF BRIDGE MOUNTED SIGN STRUCTURES SHALL BE VERIFIED BY THE CONTRACTOR'S FIELD SURVEY, PRIOR TO CONSTRUCTION.

TRAFFIC STRIPING PAY ITEM NOTES

(TS-25) QUANTITY SHOW INCLUDES 30205 L.F. TRAFFIC STRIPE (MULTI-POLYMER)(WHITE) AND 18041 L.F. TRAFFIC STRIPE(MULTI-POLYMER)(BLACK) AND 15327 L.F. TRAFFIC STRIPE(MULTI-POLYMER)(YELLOW) WILL BE MEASURED BY THE LINEAR FOOT OF SIX INCH(6") WIDE TRAFFIC STRIPE.

(TS-26) QUANTITY SHOW INCLUDES 5058 L.F. TRAFFIC STRIPE (MULTI-POLYMER)(WHITE) AND 0 L.F. TRAFFIC STRIPE(MULTI-POLYMER)(YELLOW) AND WILL BE MEASURED BY THE LINEAR FOOT OF EIGHT INCH(8") WIDE TRAFFIC STRIPE.

(TS-27) QUANTITY SHOW INCLUDES 2448 L.F. TRAFFIC STRIPE (MULTI-POLYMER)(WHITE) AND 0 L.F. TRAFFIC STRIPE(MULTI-POLYMER)(YELLOW) AND WILL BE MEASURED BY THE LINEAR FOOT OF TWELVE INCH(12") WIDE TRAFFIC STRIPE.

(TS-33) INCLUDED IN THIS PAY ITEM IS ALL HARDWARE ASSOCIATED WITH PROPERLY ANCHORING AND MOUNTING THE HIGHWAY SIGN IN ACCORDANCE WITH O.D.O.T. PLANS AND STANDARD DRAWINGS SSA1-1, SSA2-1 AND SSP1-1 (LATEST REVISION).

(TS-34) INCLUDED IN THIS PAY ITEM IS THE REMOVAL OF ANY EXISTING SIGNS TO BE REPLACED BY NEW ASSEMBLIES AND THE REMOVAL OF ANY EXISTING SIGNS THAT WILL BE IN CONFLICT WITH THE NEW ROADWAY OR NEW SIGNAGE.

(TS-39) OVERHEAD SIGN STRUCTURES AND SIGNS THAT ARE TO BE REMOVED, RESET, AND/OR RELOCATED SHALL BE CAREFULLY REMOVED BY THE CONTRACTOR AND STORED AT A SITE SELECTED BY THE ENGINEER. ANY DAMAGE TO THE STRUCTURES OR SIGNS DURING THE REMOVAL, TRANSPORTATION, STORAGE, RESETTING, AND/OR RELOCATION OF THE STRUCTURE OR SIGN SHALL BE REPAIRED BY, AND AT THE EXPENSE OF THE CONTRACTOR. THIS ALSO INCLUDES THE REMOVAL OF EXISTING SAND FILLED IMPACT ATTENUATOR MODULES & PAD, EXTERIOR SIGN FOOTING TO ONE-FOOT BELOW FINISHED GRADE. CUTTING OFF MEDIAN BARRIER BOLTS FLUSH WITH TOP OF BARRIER, MISCELLANEOUS SIGNS, LIGHT FIXTURES, CONDUIT, WIRE, AND RESTORATION OF EXISTING ROADWAY LIGHT CIRCUITRY.

(TS-41) "REMOVAL OF EXISTING SIGNS" SHALL INCLUDE THE REMOVAL OF A COMPLETE SIGN ASSEMBLY WHICH MAY INCLUDE MULTIPLE SIGNS, POSTS, FOOTINGS, AND ANY FOOTINGS ADJACENT TO THE SIGN ASSEMBLY. WHEN APPROVED BY THE ENGINEER, FOOTINGS MAY BE OBLITERATED TO A POINT BELOW GROUND LEVEL IN LIEU OF BEING COMPLETELY REMOVED. SEE GENERAL CONSTRUCTION NOTES FOR DISPOSAL OF OLD CONCRETE FOOTING MATERIAL.

SPECIAL PAY ITEM NOTES

(SP-1) ATTENUATORS SHALL BE QUADGUARD ELITE, SCI-100 GM (SMART CUSHION), OR APPROVED EQUAL WITHIN THE SAME CATEGORY. ATTENUATORS SHALL MEET ALL NCHRP-350 OR MATCH TL-3 REQUIREMENTS AND ODOT IMPACT ATTENUATORS GUIDELINES MATRIX. PRICE BID FOR THIS ITEM SHALL INCLUDE ALL HARDWARE, LABOR, AND OTHER MATERIALS TO CONSTRUCT THE ATTENUATOR AND BACKUP BLOCK AS DETERMINED BY THE MANUFACTURER.

RAMPS LOCATED AT THE FOLLOWING STATIONS:-

1 AT STA. 7+76 RAMP B, RT

1 AT STA. 7+81 RAMP E, RT

1 AT STA. 22+63 RAMP D, LT

2 AT STA. 28+51 RAMP D, LT & RT

1 AT STA. 187+38 US-169, RT

LICENSED PROFESSIONAL ENGINEER AYDA SOFIA GONZALEZ 25075 OKLAHOMA

9/16/2021

(SP-2) INCLUDED IN THIS ITEM SHALL BE THE COST OF THE REMOVAL OF ASSOCIATED SAND FILLED ATTENUATORS MODULES AND ATTENUATOR PADS, THE REMOVAL EXTERIOR SIGN FOOTING TO ONE-FOOT BELOW FINISH GRADE, CUTTING OFF THE MEDIAN BARRIER BOLTS FLUSH WITH THE TOP OF THE BARRIER, THE REMOVAL OF THE EXISTING SIGNS, LIGHT FIXTURES, CONDUIT, WIRE AND RESTORATION OF EXISTING ROADWAY LIGHTING CIRCUTRY.

(SP-3) MONOTUBE OVERHEAD SIGN STRUCTURES WILL BE POWDER COATED BLACK

Design	.		INTERCHANGE (OPERATIONAL IMPROVEMENTS) TULSA COUNTY
Drawn	.		**SIGNING & STRIPING PAY QUANTITIES & NOTES**
Checked	.		
Approved			
Squad	.		JOB PIECE NO. 10981(05) SHEET NO. AT01

REVISIONS		
NO.	DESCRIPTION	DATE
1	ITEM NUMBER	4-22-22
2	REMOVE ITEM NUMBER	4-25-22

2

0301 TRAFFIC - TRAFFIC CONTROL			
ITEM	DESCRIPTION	UNIT	QTY
857 (C) 9400	REMOVABLE PAVEMENT MARKING TAPE(4" WIDE) (TC-19, 70,75)	LF	118230
857 (E) 9630	(PL) CONST.ZONE PAV.MKRS(FLEX TAB)TYP.2-2 (TC-21,61,70,73,75)	EA	10509
857 (F) 9700	PAVEMENT MRKING. REMOVAL(TRAF.STRP) (TC-22,70,75)	LF	25672
871 (B) 2300	CONST.ZONE IMPACT ATTEN. (TC-52,70,80,84)	SD	445
877 (B) 4300	DELIVER PORTABLE LONGITUDINAL BARRIER (TC-1,2)	LF	6963
877 (C) 4400	RELOCATION OF PORT. LONGITUDINAL BARRIER (TC-1)	LF	11250
880 (A) 6220	ARROW DISPLAY (TYPE C) (TC-84)	SD	445
880 (B) 6300	CONSTRUCTION SIGN 0 TO 6.25 SF (TC-23,26,28,33,84)	SD	8010
880 (B) 6310	CONSTRUCTION SIGN 6.26 SF TO 15.99 SF (TC-23,24,26,29,33,84)	SD	5340
880 (B) 6320	CONSTRUCTION SIGN 16.0 SF TO 32.99 SF (TC-23,24,26,30,33,84)	SD	4895
880 (B) 6330	CONSTRUCTION SIGNS 33.0 SF & OVER (TC-23,24,26,33,84)	SD	890
880 (C) 6410	CONSTRUCTION BARRICADES (TYPE III) (TC-26-84)	SD	2670
880 (C) 6420	WING BARRICADES (TC-26-84)	SD	890
880 (E) 6600	WARNING LIGHTS (TYPE A) (TC-84)	SD	5340
880 (F) 6700	DRUMS (TC-26,84)(U-100)	SD	23140
880 (G) 6805	CHANNELIZER CONES (TC-26,84)	SD	10000
880 (L) 7310	(SP) TRAFFIC SURVEILANCE, OHP (NON-BID) (TC-65-70) 1	HOUR	3560
882 (A) 8210	PORT CHANGEABLE MESSAGE SIGN (TC-52,84,85)	SD	1780

TRAFFIC CONTROL QUANTITES FOR MANDATORY TIED STATE JOB PIECE NO. 33448(04) ARE INCLUDED IN THESE PAY ITEMS

TRAFFIC OPERATIONS CONSTRUCTION NOTES

EXISTING ROADWAY SHALL REMAIN OPEN DURING CONSTRUCTION. THE CONTRACTOR SHALL BE RESPONSIBLE FOR PROPER BARICADES, LIGHTS AND SIGNING WITHIN THE LIMITS OF CONSTRUCTION. ALL CONSTRUCTION SIGINING WILL BE DONE ACCORDING TO STANDARDS SET FORTH IN THE "MANUAL OF UNIFORM TRAFFIC CONTROL DEVICES, CURRENT EDITION," AND AS SHOWN ON TCP STANDARD DRAWINGS.

FIVE (5) WORKING DAYS PRIOR DETOURING WIDE LOAD VEHICLES, FOR THE CONSTRUCTION OF THE PROJECT, THE RESIDENT ENGINEER SHALL CONTACT THE OKLAHOMA HIGHWAY PATROL. SIZE AND WEIGHT SECTION (405)-425-2210 AND ADVISE THE OFFICE WHEN SAID DETOURING WILL BEGIN AND THAT WIDE LOADS OVER 12 FEET SHOULD BE ADVISED AND RESTRICTED (SEE PLANS FOR PROPOSED WIDE LOAD DETOUR ROUTE.) UPON COMPLETION OF THE PROJECT, THE RESIDENT ENGINEER SHALL CONTACT THE OKLAHOMA HIGHWAY PATROL AND ADVISE THE OFFICE THAT THE WIDE LOAD DETOUR IS NOT LONGER IN EFFECT. TRAFFIC SIGNING PAY QUANTITIES NOTES.

TRAFFIC CONTROL PAY ITEM NOTES

(TC-1) THE CONTRACTOR SHALL FURNISH AND INSTALL SUCH LIGHTS, SIGNS, BARRICADES, AND PROVIDE FLAGGERS NECESSARY FOR THE CONTROL, SAFETY, AND MAINTENANCE OF TRAFFIC WHEN INSTALLING, RELOCATING OR DELIVERING PORTABLE LONGITUDINAL BARRIER.

(TC-2) QUANTITY INCLUDES SUFFICIENT LENGTH OF PORTABLE LONGITUDINAL BARRIER TO PROVIDE FOR THE LONGEST SECTION SHOWN ON THE PLANS. THIS SAME BARRIER WILL BE USED ON OTHER DETOUR PHASES.

(TC-19) THIS ITEM INCLUDES AN ESTIMATED 88064 L.F. (4" WIDE) WHITE AND 30166 L.F. (4" WIDE) YELLOW STRIPE. THE CONTRACTOR SHALL PROVIDE AND INSTALL AN O.D.O.T. APPROVED REMOVABLE PAVEMENT MARKING TAPE. COST FOR REMOVAL OF THIS TAPE SHALL BE INCLUDED IN THE PRICE BID FOR THIS ITEM. NON-REMOVABLE MARKING TAPE (FOILD BACK) SHALL NOT BE CONSIDERED AN APPROVED EQUAL FOR THIS ITEM.

(TC-21) INCLUDED IN THE COST OF THIS ITEM SHALL BE INSTALLATION, MAINTENANCE, AND REMOVAL. THIS ITEM SHALL BE BID ACCORDINGLY.

(TC-22) AMOUNT SHOWN IS AN APPROXIMATION AND THE ACTUAL AMOUNT OF REMOVAL, IF NECESSARY, SHALL BE DETERMINED BY THE ENGINEER. PRICE BID FOR PAVEMENT MARKING REMOVAL SHALL INCLUDE THE COST OF REMOVING STRIPE, ARROWS, WORDS AND SYMBOLS, AS SHOWN IN THE PLANS. THESE ITEMS MAY CONSIST OF PLASTIC, PAINT OR NON-REMOVABLE MARKING TAPE.

(TC-23) QUANTITY SHOWN FOR THIS ITEM INCLUDES THOSE SIGNS WHICH COMPRISE THE ROUTE MARKER ASSEMBLIES USED TO INDICATE THE DETOUR ROUTE.

(TC-24) QUANTITIES SHOWN FOR CONSTRUCTION SIGNING AND STRIPING HAVE BEEN INCREASED TO ALLOW FOR TRAFFIC CONTROL ON CROSS STREETS NOT SHOWN ON THE PLANS.

(TC-26) ALL CONSTRUCTION TRAFFIC CONTROL WILL BE IMPLEMENTED ACCORDING TO CONSTRUCTION PLANS, AND INSTALLED IN A MANNER APPROVED BY THE ENGINEER, IN ACCORDANCE WITH CHAPTER VI OF THE MANUAL ON UNIFORM TRAFFIC CONTROL DEVICES, (CURRENT EDITION), AND COMPLIANT WITH APPLICABLE O.D.O.T. STANDARD DRAWINGS. PRICE BID FOR THIS ITEM SHALL BE PAYMENT IN FULL FOR THE INSTALLATION, MAINTENANCE AND SUBSEQUENT REMOVAL OF ALL NECESSARY CONSTRUCTION TRAFFIC CONTROL DEVICES REQUIRED FOR COMPLETION OF THE PROJECT.

ALL SIGNS AND BARRICADES WHICH ARE SHOWN WITH TYPE 'A' LIGHTS IN THE STANDARD DRAWINGS SHALL HAVE THE CORRESPONDING LIGHT ATTACHED DURING NON-DAYLIGHT HOURS.

(TC-28) INCLUDED IN THIS ITEM ARE ALL S.C.S. (SPECIAL CONSTRUCTION SIGNING) SIGNS WHICH ARE BETWEEN 0.00 S.F. AND 6.25 S.F. ALSO INCLUDED IN THIS ITEM SHALL BE THE COST OF INSTALLATION, MAINTENANCE, AND REMOVAL OF THESE SIGNS.

(TC-29) INCLUDED IN THIS ITEM ARE ALL S.C.S. (SPECIAL CONSTRUCTION SIGNING) SIGNS WHICH ARE BETWEEN 6.26 S.F. AND 15.99 S.F. ALSO INCLUDED IN THIS ITEM SHALL BE THE COST OF INSTALLATION, MAINTENANCE, AND REMOVAL OF THESE SIGNS.

(TC-30) INCLUDED IN THIS ITEM ARE ALL S.C.S. (SPECIAL CONSTRUCTION SIGNING) SIGNS WHICH ARE BETWEEN 16.00 S.F. AND 32.99 S.F. ALSO INCLUDED IN THIS ITEM SHALL BE THE COST OF INSTALLATION, MAINTENANCE, AND REMOVAL OF THESE SIGNS.

(TC-33) ALL CONSTRUCTION WORK ZONE SIGNS SHALL HAVE FLUORESCENT SHEETING. THE FLUORESCENT SHEETING SHALL MEET THE REQUIREMENTS OF ASTM D4956 (LATEST REVISION) THE MANUFACTURER SHALL FURNISH A TYPE 'D' CERTIFICATION IN ACCORDANCE WITH O.D.O.T. STANDARD SPECIFICATIONS (CURRENT EDITION) SUBSECTION 106.04. THE CERTIFICATION SHALL INCLUDE TEST RESULTS ON MATERIAL SUBMITTED FOR APPROVAL.

(TC-52) ANY USEDTRUCK MOUNTED ATTENUATOR OR CHANGEABLE MESSAGE SIGN TO BE PLACED ON THIS PROJECT SHALL BE SUBJECT TO INSPECTION AND APPROVAL, BY THE OKLAHOMA DEPARTMENT OF TRANSPORTATION, TO ASSURE THAT THEY ARE IN GOOD WORKING CONDITION, PRIOR TO PLACEMENT ON THE PROJECT.

(TC-61) ANY DAMAGE TO A FINISHED OR EXISTING SURFACE RESULTING FROM THE CONTRACTORS NEGLIGENCE IN THE REMOVAL OF CONSTRUCTION ZONE PAVEMENT MARKERS OR CHANNELIZING DEVICES AND THE BITUMINOUS ADHESIVE USED IN THEIR INSTALLATION, SHALL BE REPAIRED AT THE CONTRACTOR'S EXPENSE AND TO THE SATISFACTION OF THE ENGINEER.

(TC-65) THE PRICE BID FOR THIS ITEM SHALL INCLUDE THE FOLLOWING:

A. ONE OFFICIALLY MARKED OKLAHOMA HIGHWAY PATROL CAR (WHEN PROJECT INVOLVES A STATE OR FEDERAL HIGHWAY). IF AN OKLAHOMA HIGHWAY PATROL CAR IS NOT AVAILABLE, THEN A LOCAL CITY OR COUNTY LAW ENFORCEMENT VEHICLE IS TO BE USED. PRICE BID FOR THIS ITEM SHALL BE PAID ON A PER UNIT PER HOUR BASIS.

B. ONE OKLAHOMA HIGHWAY LAW ENFORCEMENT OFFICER WITH JURISDICTIONAL AUTHORITY TO WRITE AND ISSUE TRAFFIC CITATIONS. IF AN OKLAHOMA HIGHWAY PATROL LAW OFFICER IS NOT AVAILABLE, THEN A LOCAL CITY OR COUNTY LAW ENFORCEMENT OFFICER IS TO BE USED. THE LAW ENFORCEMENT OFFICER SHALL BE INSURED, LICENSED AND BONDED, IF REQUIRED, BY THE CONTRACTOR. THIS OFFICER SHALL BE SPECIFICALLY APPROVED AND ASSIGNED TO THIS WORK ACTIVITY.

C. THE CONTRACTOR SHALL MAKE ALL THE NECESSARY ARRANGEMENTS WITH THE OKLAHOMA HIGHWAY PATROL OR THE LAW ENFORCEMENT AGENCY TO PROVIDE THE REQUIRED LAW ENFORCEMENT ON THIS PROJECT.

D. THE CONTRACTOR SHALL BE RESPONSIBLE FOR PROVIDING HIS ANTICIPATED WEEKLY SCHEDULE TO THE OKLAHOMA HIGHWAY PATROL OR THE LOCAL LAW AGENCY TWO WEEKS IN ADVANCE OF THE WORK. THE WORK SCHEDULE WILL BE SUBJECT TO THE APPROVAL OF THE ENGINEER.

E. THE OKLAHOMA HIGHWAY PATROL OR THE LOCAL LAW ENFORCEMENT AGENCY WILL BE PAID FOR A MAXIMUM OF ONE (1) HOUR, PER WORK PERIOD, TO ALLOW FOR TRAVEL TO AND FROM THE OFFICER'S PERMANENT DUTY STATION AND THE WORK SITE. THIS WILL BE PAID ONE (1) TIME PER WORK PERIOD AS DEFINED BY THE CONTRACTOR IN AGREEMENT WITH THE ENGINEER.

(TC-70) THIS ITEM IS AN ESTIMATED QUANTITY TO BE USED AS DEEMED NECESSARY BY THE ENGINEER.

(TC-73) QUANTITY SHOWN INCLUDES 7828 EA. (WHITE) AND 2681 EA. (YELLOW) CONSTRUCTION ZONE PAVEMENT MARKERS (FLEX TABS). THESE CONSTRUCTION ZONE PAVEMENT MARKERS SHALL BE EITHER "DAVIDSON PLASTICS: MODEL TOM", OR AN APPROVED EQUAL. PRICE BID FOR THIS ITEM SHALL INCLUDE THE INITIAL PLACEMENT, SUBSEQUENT REPLACEMENT, AND REMOVAL. THE CONSTRUCTION ZONE PAVEMENT MARKERS (FLEX TABS) SHALL BE INSTALLED IN ACCORDANCE WITH THE MANUFACTURER'S RECOMMENDATIONS AND AS SHOWN ON STANDARD DRAWING TCS21-1-(LATEST REVISION).

(TC-75) TEMPORARY PAVEMENT MARKINGS SHALL BE IN PLACE THE SAME DAY THAT EXISTING PAVEMENT MARKINGS ARE REMOVED FROM ANY ROADWAY OPEN TO TRAFFIC. ALSO, ALL TEMPORARY PAVEMENT MARKINGS SHALL BE REMOVED PRIOR TO THE INSTALLATION OF FINAL STRIPING.

(TC-76) ANY TRUCK MOUNTED ATTENUATOR USED ON THIS PROJECT SHALL HAVE PASSED ALL MANDATORY AND OPTIONAL TESTS LISTED IN NCHRP 350, TL-3 CRITERIA. THIS ITEM IS TO BE USED WHERE SHOWN IN THE STANDARD DRAWINGS OR AT THE DISCRETION OF THE ENGINEER ON SHADOW VEHICLES PROTECTING THE WORK AREAS AND TEMPORARY ROADSIDE HAZARDS.

(TC-77) TRUCK MOUNTED ATTENUATORS ARE TO BE INSTALLED ON NON-STATE-OWNED TRUCKS HAVING A MINIMUM GROSS WEIGHT RATING OF 15,000 POUNDS. EACH OF THESE TRUCKS SHALL ALSO BE EQUIPPED WITH AN ARROW DISPLAY (TYPE B).

(TC-80) INCLUDED IN THIS ITEM SHALL BE ONE (1) ADDITIONAL UNIT TO BE USED AS A STAND-BY OR REPLACEMENT. THIS STAND-BY UNIT SHALL BE IMMEDIATELY ACCESSIBLE TO REPLACE A DAMAGED, STOLEN OR MALFUNCTIONING UNIT. THE AMOUNT OF TIME BETWEEN THE REMOVAL OF THE DAMAGED UNIT AND THE INSTALLATION OF THE STAND-BY UNIT SHALL BE NO MORE THAN TWENTY-FOUR (24) HOURS.

(TC-84) 445 CONSTRUCTION CALENDAR DAYS WERE USED TO COMPUTE THE SIGN DAY PAY ITEMS. THE AMOUNT OF CALENDAR DAYS USED TO COMPUTE THE SIGN DAY PAY ITEMS IS AN ESTIMATED QUANTITY ONLY, BASED ON THE CURRENT O.D.O.T. STANDARDS AND SUGGESTED CONSTRUCTION SEQUENCE FOR THIS PROJECT. THESE ESTIMATED SIGN DAY QUANTITIES MAY CHANGE AS THE PROJECT'S CONSTRUCTION TRAFFIC CONTROL IS MODIFIED DURING CONSTRUCTION.

(TC-85) THESE SIGNS MUST BE ON THE OKLAHOMA DEPARTMENT OF TRANSPORTATION LIST OF APPROVED CHANGEABLE MESSAGE SIGNS. FOR A LIST OF THE APPROVED SIGNS GO TO THE OKLAHOMA DEPARTMENT OF TRANSPORTATION WEBSITE AT:

http://www.okladot.state.ok.us/traffic/gpl/index.php

(U-100) WARNING LIGHTS (TYPE C) ARE NOT REQUIRED

LICENSED PROFESSIONAL ENGINEER AYDA SOFIA GONZALEZ 25075 OKLAHOMA

9/16/2021

Design		INTERCHANGE (OPERATIONAL IMPROVEMENTS) TULSA COUNTY
Drawn		**SUGGESTED TRAFFIC CONTROL**
Checked		**PAY QUANTITIES & NOTES**
Approved		
Squad		JOB PIECE NO. 10981(05) SHEET NO. AT02

REVISIONS		
NO.	DESCRIPTION	DATE
1	REV. LIHGTING NO.	04-22-22

GENERAL CONSTRUCTION NOTES

THE STRUCTURAL DESIGN OF ALL POLES, MAST ARMS, HIGH-MAST POLES, AND OTHER SUPPORTS FOR SIGNS, LUMINAIRES, AND SIGNALS, AS WELL AS THEIR CONNECTIONS, SHALL BE IN ACCORDANCE WITH THE LATEST EDITION OF THE AASHTO STANDARD SPECIFICATIONS FOR STRUCTURAL SUPPORTS FOR HIGHWAY SIGNS, LUMINAIRES, AND TRAFFIC SIGNALS. THE MANUFACTURER SHALL ENSURE THE FOLLOWING ARE APPLIED TO THE DESIGN:

THE MINIMUM DESIGN WIND SPEED AND DESIGN LIFE AS REQUIRED IN THE AASHTO SPECIFICATIONS;

THE CALCULATED STRESSES AND FORCES FROM THE DESIGN LOADINGS DO NOT EXCEED THOSE REQUIRED IN THE AASHTO SPECIFICATIONS;

A CATEGORY I FATIGUE IMPORTANCE FACTOR (IF) FOR ALL STRUCTURES; NO VIBRATORY MITIGATION SHALL BE ALLOWED. TRUCK-INDUCED GUSTS SHALL BE APPLIED TO ALL OVERHEAD TRAFFIC SIGNAL SUPPORTS.

ALL MEMBERS ARE AT LEAST THE MINIMUM THICKNESS AS REQUIRED IN THE AASHTO SPECIFICATIONS;

LUMINAIRE MAST ARMS SHALL BE DESIGNED TO SUPPORT AT LEAST A 50 LB. (22.7 KG) LUMINAIRE WITH AN EFFECTIVE PROJECTED AREA OF 2.5 FT2 (0.23 M2); THE ANCHOR BOLT DESIGN AND AMOUNT OF ANCHOR BOLTS TO BE USED SHALL BE AS REQUIRED IN THE AASHTO SPECIFICATIONS.

SIGNAL MAST ARMS AND POLES SHALL BE DESIGNED FOR SPECIFIC SIGNAL HEAD AND SIGN PLACEMENT.

UNLESS SITE SPECIFIC GEOTECHNICAL DATA IS AVAILABLE, FOUNDATIONS SHALL BE DESIGNED UTILIZING THESE PARAMETERS: SHEAR STRENGTH OF COHESIVE SOIL (C) OF 500 PSF, ANGLE OF INTERNAL FRICTION (Φ) OF 22 DEGREES, AND EFFECTIVE UNIT WEIGHT OF SOIL (Γ) OF 120 PCF.

MINIMUM HAND HOLE SIZE OF 3 INCH WIDTH BY 5 INCH HEIGHT.

SYMBOLS AND LEGENDS ARE DIAGRAMMATIC ONLY AND LOCATIONS SHALL BE ADJUSTED FOR EXISTING FIELD CONDITIONS, BUT NO MAJOR ALTERATIONS OR RELOCATIONS WILL BE MADE WITHOUT FIRST CONSULTING WITH THE TRAFFIC ENGINEERING DIVISION AT (405)521-2861.

THIS PROJECT SHALL BE CONSTRUCTED WITHOUT CLOSING THE EXISTING ROAD TO LOCAL AND THROUGH TRAFFIC. SEE STANDARD SPECIFICATIONS FOR MAINTENANCE OF LOCAL AND THROUGH TRAFFIC.

ALL BROKEN CONCRETE, WASTE MATERIAL, AND DEBRIS SHALL BECOME THE PROPERTY OF THE CONTRACTOR, AND SHALL BE REMOVED FROM THE LIMITS OF THE PROJECT AND DISPOSED OF IN AN AREA APPROVED BY THE ENGINEER. NO PAYMENT WILL BE MADE FOR THE DISPOSAL OF THIS MATERIAL.

THE CONTRACTOR SHALL BE RESPONSIBLE FOR ANY DAMAGE HE MAY INFLICT TO THE EXISTING UNDERGROUND UTILITIES WITHIN THE PROJECT AREA AS A RESULT OF HIS DIGGING, TRENCHING, BORING, ETC.... PRIOR TO DIGGING NEAR THE UTILITIES, THE CONTRACTOR SHALL CALL FOR A LIST OF ALL UNDERGROUND FACILITIES REGISTERED IN THE AREA OF CONSTRUCTION LISTED WITH THE FOLLOWING AGENCIES:
THE "OKIE" NOTIFICATION CENTER 811 OR (405)522-6543 OR WWW.CALLOKIE.COM OR THE LOCAL COUNTY CLERK'S OFFICE.

PAY QUANTITY NOTES

(TP-1) PAYMENT FOR THIS ITEM WILL BE BASED ON PLAN QUANTITY. SEE THE 2009 SPECIFICATIONS FOR HIGHWAY CONSTRUCTION.

(1) THE PART OR WHOLE OF THE QUANTITY IN THIS PAY ITEM FOR THE TOWER LIGHTING HAS BEEN ESTIMATED FOR A DEPTH OF 35' FOR EACH TOWER. THE ACTUAL DEPTH OF EACH DRILLED SHAFT WILL NEED BE DETERMINED BY BORING DATA.

(2) PAY ITEM IS TO BE USED FOR THE UNDERPASS LIGHT LIGHTING. THE COST OF ALL FLEXIBLE CONDUIT TO BE USED ON THIS PROJECT, AS SHOWN IN THE PLANS, SHALL BE CONSIDERED AS INCIDENTAL TO THE PROJECT AND THE COST SHALL BE INCLUDED IN OTHER ITEMS OF WORK.

(3) PAY ITEM IS FOR THE SPECIAL MEDIAN PULL BOXES AS DETAILED IN ODOT STANDARD BMF1-2-(LATEST REVISION) TO BE INSTALLED ON THIS PROJECT.

(4) POLYMER CONCRETE PULL BOXES SHALL BE USED.

(5) PAY ITEM IS FOR THE REMOVAL OF ONE (1) SIZE I PULLBOX AS SHOWN ON PAGE T002 OF THE PLANS. REMOVED PULLBOX SHALL BECOME THE PROPERTY OF THE CONTRACTOR AND DISPOSED OF AS DESCRIBED IN THE GENERAL CONSTRUCTION NOTES.

(6) REMOVED TOWER SHALL BECOME THE PROPERTY OF THE STATE AND SHALL BE DISASSEMBLED AND STORED ON SITE UNTIL STATE PERSONNEL CAN PICK THEM UP. ALSO INCLUDED IN THE PRICE BID FOR THIS ITEM SHALL BE THE OBLITERATION AND REMOVAL OF THE 4' SIDEWALK SURROUNDING THE FOOTING AND THE EXISTING DRILLED SHAFT FOOTINGS SHALL BE REMOVED BELOW GROUND LEVEL, AS APPROVED BY THE ENGINEER.

(7) REMOVED POLES SHALL BECOME THE PROPERTY OF THE STATE AND SHALL BE STORED ON SITE UNTIL STATE PERSONNEL CAN PICK THEM UP. ALSO INCLUDED IN THE PRICE BID FOR THIS ITEM SHALL BE THE OBLITERATION AND REMOVAL OF THE EXISTING FOOTINGS BELOW GROUND LEVEL, AS APPROVED BY THE ENGINEER.

(8) THE POLES TO BE INSTALLED ON THIS PROJECT SHALL BE OVAL GALVANIZED STEEL POLES IN ACCORDANCE WITH PERTINENT ODOT STANDARDS AND SPECIFICATIONS.

(9) THE FIXTURES TO BE INSTALLED ON THIS PROJECT SHALL BE LED FIXTURES AS DESCRIBED BELOW:

+ 4 – LED MONGOOSE FIXTURES MANUFACTURED BY HOLOPHANE MODEL NUMBER MGLEDM-P4-40K-480-MR-VH-GRSD.

+ 6 – LED WALLPACK IV FIXTURES MANUFACTURED BY HOLOPHANE MODEL NUMBER W4GLED-20C-1000-40K-T3M-480-GYSDP FOR UNDERPASS LIGHTING.

+ 6 - LED FIXTURES MANUFACTURED BY HOLOPHANE MODEL NUMBER HMLED4-P4-40K-H480-HGR-AW-PR7 FOR HIGH MAST TOWER LIGHTING TO BE INSTALLED ON TOWER 1.

PAY QUANTITIES

JP# 10981(05)
0303 LIGHTING

ITEM	DESCRIPTION		UNIT	TOTAL
509(A) 0200	CLASS AA CONCRETE	(1)	CY	16.28
516(A) 8230	DRILLED SHAFT 48" DIAMETER	(1)	LF	35.00
610(A) 5200	4" CONCRETE SIDEWALK		SY	21.00
802(A) 0200	3/4" GALV. STEEL ELECTRICAL CONDUIT EXPOSED	(TP-1)(2)	LF	750.00
802(A) 0220	1 1/4" GALV.STEEL ELECT.COND. EXPOSED	(TP-1)(2)	LF	850.00
802(B) 0320	2" PVC SCH. 40 PLASTIC CONDUIT BORED	(TP-1)	LF	100.00
802(B) 0324	2" PVC SCH. 40 PLASTIC CONDUIT TRENCHED	(TP-1)	LF	405.00
802(C) 0430	2" HIGH DENSITY PE PIPE - TRENCHED	(TP-1)	LF	960.00
802(E) 0620	JUNCTION BOX (12" X 12" X 8")	(2)	EA	3.00
803(A) 1200	PULL BOX	(3)	EA	5.00
803(A) 1210	PULL BOX (SIZE I)	(4)	EA	4.00
804(B) 2300	REINFORCING STEEL	(TP-1)(1)	LB	2653.00
805(A) 3208	REMOVAL OF PULL BOX	(5)	EA	1.00
805(A) 3216	REMOVAL OF HIGH MAST TOWER	(6)	EA	1.00
805(A) 3228	(PL)REMOVAL OF LIGHT POLE	(7)	EA	3.00
806(C) 4512	40' MTG & 10' HLMA (G.STL.)	(8)	EA	4.00
809(A) 7200	ROADWAY LUMINAIRE	(9)	EA	4.00
809(B) 7300	UNDERPASS LUMINAIRE	(9)	EA	6.00
809(E) 7600	HIGH MAST LUMINAIRE	(9)	EA	6.00
811 9115	1/C NO.4 ELECT.COND.	(TP-1)	LF	1445.00
811 9130	1/C NO.10 ELECT.COND.	(TP-1)(2)	LF	1345.00
811 9135	1/C NO.12 ELECT.COND.	(TP-1)	LF	500.00
812 0130	130' HIGH MAST POLE (G.STL.)		EA	1.00
813 1100	HIGH MAST LOWERING DEV.TYP.I		EA	1.00

R. WAYNE RUSSELL, P.E. # 16030
C.A. # 1160, RENEWAL 06-30-23

8-18-21
DATE

Traffic Engineering Consultants, Inc.
6000 S. Western Ave., Suite 300 - Oklahoma City, OK 73139,
Ph: 405-720-7721, Web: www.tecusa.com

REGISTERED PROFESSIONAL ENGINEER R. WAYNE RUSSELL 16030 OKLAHOMA

Design	RWR	04/22/22
Drawn	SB	04/22/22

TEC A CLEAR DIRECTION

LIGHTING PAY QUANTITIES AND NOTES

State Job No. 10981(05) Sheet No. AT03

TULSA COUNTY

04/22/22 G:\0Projects\T-24920 Lighting, EC-1710, I-44 & US 169 Interchange - Tulsa County, OK\CAD\AT03-109805-QUANT LIGHT.dgn

SUMMARY OF SURFACING AND RELATED QUANTITIES

LOCATION STATION (CTR. LINE OR REF. LINE)	303(A)1200 AGGREGATE BASE TYPE A	307(K)4200 STABILIZED SUBGRADE	317 7100 CEMENT TREATED BASE	325 0100 SEPARATOR FABRIC	326(B)1300 GEOGRID REINFORCEMENT	402(E)2600 TRAFFIC BOUND SURFACE COURSE TYPE E	407(B)7300 TACK COAT	411(B)1330 SUPERPAVE, TYPE S3(PG 64-22 OK)	411(C)1400 SUPERPAVE, TYPE S4(PG 76-28 OK)	411(C)1430 SUPERPAVE, TYPE S4(PG 64-22 OK)	412 3100 COLD MILLING PAVEMENT	414(A)5200 P.C.CONCRETE PAVEMENT(PLACEMENT)	414(B)5300 DOWEL JOINTED P.C. CONCRETE PAVEMENT(PLACEMENT)	414(G)5800 P.C. CONCRETE FOR PAVEMENT	609(A)4220 CONCRETE CURB (4" MNTBLE-INTEGRAL)	609(A)4260 CONCRETE CURB (6" MOUNTABLE-DOWELLED)	
	CY	SY	SY	SY	SY	TON	GAL	TON	TON	TON	SY	SY	SY	CY	LF	LF	
RAMP G DETOUR – STA 96+60 TO STA 110+00, ℄ RAMP G							374	840		280							
RAMP G – STA 95+51.19 TO STA 110+32.91, ℄ RAMP G		5,091	5,091			.	16	.	18		210	1,766	2,691	1,114.14	2,853	109	
RAMP G – STA 110+32.91 TO STA 130+17.53, ℄ RAMP G		5,939	5,592			314	39	.	44		530	2,243	2,906	1,716.27	418		
RAMP H – STA 0+00.00 TO STA 7+46.95, ℄ RAMP H		2,989	2,989				9		10		121	858	1,811	667.14	1,443		
RAMP E – STA 0+60.70 TO STA 12+06.57, ℄ RAMP E		3,602	3,602				73		819		975	1,235	2,008	810.66	1,228		
RAMP D – STA 19+63.33 TO STA 29+35.00, ℄ RAMP D		3,668	3,376			430	19		22		252	1,045	2,000	760.95			
RAMP D – STA 38+85 TO STA 40+09.84, ℄ RAMP D		528	472			78						159	258	103.96	8		
RAMP F – STA 36+87.85 TO STA 40+15.57, ℄ RAMP F		1,104	1,104									330	673	250.52	415		
RAMP D & F – STA 40+09.84 TO STA 51+13.00, ℄ RAMP D		4,432	4,292			138						1,481	2,670	1,037.53	12		
RAMP B & B EXT – STA 0+42.59 TO STA 11+56.19, ℄ RAMP B		3,541	3,541				70		79		933	1,204	1,982	796.46	1,188		
WB CD ROAD – STA 611+30.12 TO STA 617+06.34 LT, ℄ SURVEY I-44		43	43				67		76		897	32		7.85	50		
WB CD ROAD – STA 624+45.00 TO STA 627+81.00 LT, ℄ SURVEY I-44							56		62		737						
EB CD ROAD – STA 612+06.00 TO STA 612+96.04 RT, ℄ SURVEY I-44		107	107				9		10		120	87		24.09	90		
PAVEMENT REPLACEMENT PIER NO. 2 – STA 619+20.00 TO STA 620+08.00 RT, ℄ SURVEY I-44	70			177								143		47.47			
PAVEMENT REPLACEMENT PIER NO. 3 – STA 619+67.53 TO STA 620+12.53 ℄ SURVEY I-44	46			112								91		30.29			
PAVEMENT REPLACEMENT PIER NO. 4 – STA 620+34.00 TO STA 621+18.00 LT, ℄ SURVEY I-44	75			188								148		49.35			
US-169 WITH F-SHAPED PARAPET – STA 187+37.75 TO STA 191+52.82 RT, ℄ SURVEY US-169	39			254	346							254		112.73			
US-169 WITH ATTENUATOR – STA 187+00.00 TO STA 187+37.75 RT, ℄ SURVEY US-169	5				42							34		14.82			
US-169 WITH CLB DESIGN 1-A – STA 191+52.82 TO STA 193+01.61 RT, ℄ SURVEY US-169	12											104		46.21			
TOTALS	247	31,044	30,209	731	388	960	732	840	1,140	280	4,775	11,214	16,999	7,590.44	7,705	109	

SUMMARY OF PAVEMENT EDGE DRAIN QUANTITIES

LOCATION STATION (CTR. LINE OR REF. LINE)	LEFT	RIGHT	CENTER	TYPE OUTLET: DAYLIGHT THRU SLOPE	TYPE OUTLET: STUB INTO DRAIN. STR.	EDGE DRAIN CONDUIT PERFORATED	EDGE DRAIN LATERAL NON.PERFORATED	OUTLET LATERAL HEADWALL	325 0100 SEPARATOR FABRIC
						FT	FT	EA	SY
STA 0+42.00 TO 5+04.00, RAMP B		X			1	430			478
STA 5+04.00 TO 8+40.00, RAMP B		X			1	325			361
STA 8+40.00 TO 11+56.00, RAMP B		X			1	365	10		406
STA 0+61.00 TO 5+00.00, RAMP E		X			1	410			456
STA 5+00.00 TO 5+62.00, RAMP E		X			1	55			61
STA 5+62.00 TO 8+50.00, RAMP E		X			1	285	15		317
STA 8+50.00 TO 12+06.57, RAMP E		X			1	355	10		394
STA 0+00.00 TO 1+31.00, RAMP H		X			1	120			133
STA 1+31.00 TO 4+11.00, RAMP H		X			1	260			289
STA 4+11.00 TO 7+46.95, RAMP H		X			1	315			350
STA 96+65.00 TO 99+00.00, RAMP G		X		1		225	20	1	250
STA 99+00.00 TO 101+10.00, RAMP G		X		1		205	20	1	228
STA 101+10.00 TO 104+20.00, RAMP G	X			1		300	25	1	333
STA 104+20.00 TO 106+50.00, RAMP G	X				1	225			250
STA 106+50.00 TO 108+92.00, RAMP G		X			1	240	50		267
STA 108+92.00 TO 112+50.00, RAMP G		X			1	355	50		394
STA 112+50.00 TO 114+53.00, RAMP G		X			1	205	60		228
STA 36+87.85 TO 39+81.22, RAMP F		X			1	290	250		322
STA 39+81.22 TO 43+00.00, RAMP F		X		1		300	5	WALL	333
STA 43+00.00 TO 46+00.00, RAMP D		X		2		300	10	1(LP)	333
STA 43+00.00 TO 49+91.04, RAMP D		X		1		345	10	1	383
STA 187+37.75 TO STA 192+52.82 RT, ℄ SURVEY US-169		X			2	515	25		372
ESTIMATED FOR REROUTING FOR PIER PROTECTION I-44	X	X	X			215			339
TOTALS						6,640	560	5	7,277

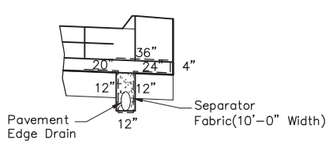

EDGE DRAIN DETAIL

SUMMARY OF F-SHAPED PARAPET AND LONGITUDINAL BARRIER QUANTITIES

LOCATION STATION (CTR. LINE OR REF. LINE)	LEFT	CENTER	RIGHT	202(E)2600 SELECT BORROW	504(E)5500 CONCRETE PARAPET	504(E)5520 42" F-SHAPED PARAPET	509(B)0310 CLASS A CONCRETE (LONG. BAR. DES. 1-A)	510(C)1440 SLOPE WALL (5")	511(B)2300 EPOXY COATED REINFORCING STEEL	610(C)5400 4" CONCRETE DIVIDING STRIP	627(A)6200 CONCRETE LONGITUDINAL BARRIER, DESIGN 1	627(B)6300 CONCRETE LONGITUDINAL BARRIER END SECTIONS	NOTE
				CY	LF	LF	CY	SY	LB	SY	LF	EA	
STA. 22+62.99 TO STA. 25+28.99, ℄ RAMP D, NO DRAIN OPENINGS	X					295.00			7,750				
STA. 28+50.99 TO STA. 29+35.00, ℄ RAMP D, NO DRAIN OPENINGS	X					93.00			2,450				
STA. 28+50.99 TO STA. 29+35.00, ℄ RAMP D, W/DRAIN OPENINGS			X			79.00			2,080				
STA. 38+85.00 TO STA. 40+76.84, ℄ RAMP D, W/DRAIN OPENINGS	X					193.00			5,080				
STA. 38+85.00 TO STA. 40+02.67, ℄ RAMP D, W/DRAIN OPENINGS			X			118.40			3,120				
STA. 40+76.84 TO STA. 42+25.17, ℄ RAMP D, NO DRAIN OPENINGS	X					149.46			4,650				
STA. 37+60.00 ℄ RAMP F TO STA. 49+41.04, ℄ RAMP D, W/DRAIN OPENINGS			X			1,172.44			30,800				
STA 187+37.75 TO STA 191+52.82, ℄ SURVEY US-169			X	39		415.07			7,990	38			
STA 191+52.82 TO STA 193+11.61, ℄ SURVEY US-169			X				39.36		3,630			1	(1)
STA 619+04.92 TO STA 620+08.00, ℄ SURVEY I-44 PIER 2 PROTECTION			X	30		146.00			2,820	33	64.83		
STA 619+40.58 TO STA 620+61.20, ℄ SURVEY I-44 PIER 3 PROTECTION		X		34		90.00			1,740	38	140.26		
STA 619+40.58 TO STA 620+61.20, ℄ SURVEY I-44 PIER 4 PROTECTION	X			50		168.00			3,240	56	188.83		
STA. 7+76.47 TO STA. 11+72.53, ℄ RAMP B, BRIDGE PIER PROTECTION			X	160	396.17			165.00	7,670				
STA. 7+81.24 TO STA. 11+43.47, ℄ RAMP E, BRIDGE PIER PROTECTION			X	90	362.33			140.00	7,010				
STA 598+80.00 TO STA 599+89.00, ℄ SURVEY I-44 MONOTUBE STRUCTURE		X		29			27.47		1,500	27			(2)
TOTALS				432	758.50	2,919.37	66.83	305	91,530	192	393.92	1	

NOTES:

(1) DIFFERENCE IN GRADE VARIES 0" TO 35". SEE ODOT STD. CLB-2

(2) SEE SHEET R041 FOR DETAILS.

REGISTERED PROFESSIONAL ENGINEER ROBIN D. SEWELL 16173 OKLAHOMA

9/17/21

Survey	CKS	
Drawn	CKD	
Checked	CKE	
Approved		
Squad	C & K	

INTERCHANGE (OPERATIONAL IMPROVEMENTS) TULSA COUNTY

SUMMARY SHEET (ROADWAY)

JOB PIECE NO. 10981(05)

SHEET NO. AX01

SUMMARY OF TEMPORARY EROSION CONTROL QUANTITIES

SHEET NUMBER	STATION (CTR. LINE OR REF. LINE)			DESCRIPTION	221(C)2300 TEMPORARY SILT FENCE	221(F)2600 TEMPORARY SILT DIKE	221(K)2800 TEMPORARY FIBER LOG	
		LEFT	RIGHT		LF	LF	LF	
R007	STA 91+52 TO STA 100+00, RAMP G		X	ALONG TOE OF SLOPE	440			
R007	STA 98+00, RAMP G	X		ACROSS DITCH		16		
R007	STA 99+00, RAMP G	X		ACROSS DITCH		16		
R005	STA 100+00 TO STA 106+00, RAMP G		X	ALONG TOE OF SLOPE	620			
R005	STA 100+00, RAMP G	X		ACROSS DITCH		16		
R005	STA 101+00, RAMP G	X		ACROSS DITCH		16		
R005	STA 102+00, RAMP G	X		ACROSS DITCH		16		
R005	STA 103+00, RAMP G	X		ACROSS DITCH		16		
R005	STA 104+00, RAMP G	X		ACROSS DITCH		16		
R005	STA 105+00, RAMP G	X		ACROSS DITCH		16		
R005	STA 106+00, RAMP G	X		ACROSS DITCH		16		
R004	STA 106+00 TO STA 110+60, RAMP G		X	ALONG TOE OF SLOPE	460			
R004	STA 106+20 TO 109+80, RAMP G	X		ALONG TOE OF SLOPE	370			
R004	STA 106+50, RAMP G	X		AROUND INLET			56	
R004	STA 108+92, RAMP G	X		AROUND INLET			56	
R004	STA 112+00, RAMP G		X	ACROSS DITCH		16		
R004	STA 114+00, RAMP G		X	ACROSS DITCH		16		
R004	STA 114+50 TO STA 120+00, RAMP G		X	ALONG TOE OF SLOPE	550			
R004	STA 116+40, RAMP G		X	AROUND EXISTING INLET			56	
R004	STA 117+40, RAMP G		X	AROUND EXISTING INLET			56	
R003	STA 120+00 TO STA 130+17, RAMP G		X	ALONG TOE OF SLOPE	1,030			
R005	STA 0+00 TO STA 8+00, RAMP H		X	ALONG TOE OF SLOPE	720			
R005	STA 1+31, RAMP H		X	AROUND INLETS			112	
R005	STA 4+11, RAMP H		X	AROUND INLET			56	
R006	STA 0+60 TO STA 3+50, RAMP E		X	ALONG TOE OF SLOPE	290			
R006	STA 3+00, RAMP E	X		ACROSS DITCH		16		
R006	STA 4+00, RAMP E	X		ACROSS DITCH		16		
R006	STA 5+00, RAMP E	X		ACROSS DITCH		16		
R006	STA 5+00, RAMP E		X	AROUND INLET			56	
R006	STA 5+20, RAMP E	X		AROUND EXISTING INLET			56	
R006	STA 6+00 TO STA 9+00, RAMP E		X	ALONG TOE OF SLOPE	300			
R006	STA 7+00, RAMP E		X	ACROSS EXISTING DITCH		16		
R006	STA 8+40, RAMP E		X	ACROSS EXISTING DITCH		16		
R006	STA 8+60, RAMP E		X	AROUND EXISTING INLET			56	
R006	STA 20+00 TO STA 20+00, RAMP D		X	ALONG TOE OF SLOPE	80			
R006	STA 21+50, RAMP D		X	ACROSS EXISTING DITCH		16		
R006	STA 21+90, RAMP D		X	AROUND INLET			56	
R006	STA 22+00, RAMP D	X		ACROSS EXISTING DITCH		16		
R006	STA 22+20, RAMP D	X		AROUND INLET			56	
R006	STA 22+50, RAMP D	X	X	ACROSS EXISTING DITCH		32		
R006	STA 23+50, RAMP D	X	X	ACROSS EXISTING DITCH		32		
R006	STA 24+50, RAMP D	X	X	ACROSS EXISTING DITCH		32		
R006	STA 25+00 TO STA 30+20, RAMP D		X	ALONG TOE OF SLOPE	390			
R006	STA 25+20 TO STA 28+20, RAMP D	X		ALONG TOE OF SLOPE	510			
R006	STA 34+00, RAMP D	X	X	AROUND PIER CONST.	100			
R006	STA 34+88, RAMP D	X	X	AROUND PIER CONST.	100			
R006	STA 35+76, RAMP D	X	X	AROUND PIER CONST.	100			
R006	STA 37+68, RAMP D	X	X	AROUND PIER CONST.	100			
R007	STA 37+00 TO STA 40+75, RAMP D	X	X	ALONG TOE OF SLOPE	580			
R007	STA 40+00, RAMP D		X	ACROSS EXISTING DITCH		16		
R007	STA 40+35, RAMP D	X		AROUND INLET			56	
R007	STA 42+00, RAMP D		X	ACROSS EXISTING DITCH		16		
R007	STA 42+50, RAMP D	X		AROUND INLET			56	
R007	STA 43+65, RAMP D	X		AROUND INLET			56	
R007	STA 46+00, RAMP D		X	ACROSS EXISTING DITCH		16		
R007	STA 48+00, RAMP D		X	ACROSS EXISTING DITCH		16		
R007	STA 48+60 TO STA 51+20, RAMP D		X	ALONG TOE OF SLOPE	260			
				TOTAL	7,000	448	840	

SUMMARY OF EROSION CONTROL QUANTITIES

SHEET NUMBER	STATION (CTR. LINE OR REF. LINE)	DESCRIPTION	WORK AREA	230(A)7200 SOLID SLAB SODDING
				SY
R007	STA 91+52 TO STA 100+00, RAMP G		1	1,220
R007	STA 91+52 TO STA 100+00, RAMP G		2	1,050
R005	STA 100+00 TO STA 106+00, RAMP G		1	2,270
R005	STA 100+00 TO STA 106+00, RAMP G		2	1,720
R004	STA 106+00 TO STA 110+35, RAMP G		1	1,450
R004	STA 106+00 TO STA 120+00, RAMP G		2	2,780
R003	STA 120+00 TO STA 130+17, RAMP G		2	2,580
R005	STA 1+07 TO STA 5+60, RAMP B		1	650
R005	STA 0+42 TO STA 9+70, RAMP B		2	1,390
R005	STA 0+80 TO STA 7+60, RAMP H		1	990
R005	STA 0+00 TO STA 8+00, RAMP H		2	1,660
R006	STA 1+25 TO STA 5+75, RAMP E		1	670
R006	STA 0+60 TO STA 9+75, RAMP E		2	880
R006	STA 20+40 TO STA 29+35, RAMP D		1	3,650
R006	STA 19+90 TO STA 30+20, RAMP D		2	3,080
R006	STA 30+20 TO STA 38+00, RAMP D	PIERS	1,2	170
R006	STA 36+00 TO STA 37+00, RAMP F		1	350
R006	STA 19+90 TO STA 30+20, RAMP F		2	1,360
R007	STA 38+85 TO STA 40+77, RAMP D & F		1	1,750
R007	STA 37+00 TO STA 51+18, RAMP D & F		2	2,020
			TOTAL	31,690

EROSION CONTROL TYPICAL SECTION

VEGETATIVE MULCHING WILL BE USED FOR TEMPORARY EROSION CONTROL

SUMMARY OF REMOVAL QUANTITIES

ITEM	DESCRIPTION	UNIT	QUANTITY SHEET R027	QUANTITY SHEET R028	QUANTITY SHEET R029	QUANTITY SHEET R030	QUANTITY SHEET R031	QUANTITY TOTAL
619(B)6356	REMOVAL OF CURB AND GUTTER	LF			128	433	515	1,076
619(B)6360	REMOVAL OF CONCRETE PAVEMENT	SY	1,073		841	2,772	1,070	5,756
619(B)6364	REMOVAL OF ASPHALT PAVEMENT	SY			110	571	1,431	2,112
619(B)6368	REMOVAL OF DRAINAGE INLETS	EA		2	3	10		15
619(B)6376	REMOVAL OF CONCRETE PAVEMENT W/ASPHALT OVERLAY	SY	135	2,491	5,229	3,731	626	12,212
619(B)6396	REMOVAL OF GUARDRAIL	LF				100		100
619(B)6416	REMOVAL OF CONCRETE MEDIAN BARRIER	LF	109			420		529
619(B)6436	REMOVAL OF CONCRETE DITCH LINER	LF				89	16	105
619(B)6440	REMOVAL OF EXISTING PIPE	LF		30	22	118		170
619(C)6600	SAWING PAVEMENT	LF	1,052	1,043	1,058	1,788	1,521	6,462
805(A)3236	(PL)REMOVAL OF OVERHEAD SIGN STRUCTURE ①	EA	1					1
870(C)1300	SAND FILLED IMPACT ATTENUATION MODULE REMOVAL ①	LSUM			1			1

NOTE: ① TRAFFIC ITEM

REGISTERED PROFESSIONAL ENGINEER RODNEY D. SEWELL 16173 OKLAHOMA
9/17/21

Survey	CKS	
Drawn	CKD	
Checked	CKE	
Approved		
Squad	C & K	

INTERCHANGE (OPERATIONAL IMPROVEMENTS) TULSA COUNTY

SUMMARY SHEET (ROADWAY)

JOB PIECE NO. 10981(05) SHEET NO. AX02

SUMMARY OF DRAINAGE STRUCTURES

STRUCTURE NUMBER	PLANS SHEET NUMBER	LOCATION	DESCRIPTION	DESIGN	ELEVATIONS: TOP OF CURB	ELEVATIONS: TOP OF COVER OR GRATE OR FL INLET	ELEVATIONS: FLOW LINE OF INLET (OUT)	TRENCH EXCAVATION	STANDARD BEDDING MATERIAL CLASS B	CLASS "A" CONC: SMALL STRUCTURE	CLASS "A" CONC: LARGE STRUCTURE	REINFORCING STEEL	CAST IRON CURB INLETS: CI–1 DES.2	CAST IRON CURB INLETS: CI–1 DES.3	CAST IRON CURB INLETS: ADD'L DEPTH DES.2	CAST IRON CURB INLETS: ADD'L DEPTH DES.3	GRATED PIPE INLETS: TYPE 1 DES.1	GRATED PIPE INLETS: TYPE 1	GRATED PIPE INLETS: TYPE 2 DES.8	GRATED PIPE INLETS: TYPE 2	GRATED PIPE INLETS: ADD'L DEPTH TYPE 1	GRATED PIPE INLETS: ADD'L DEPTH TYPE 2	INLET LONG. BARRIER: TYPE TYPE 1 DES. 2	INLET LONG. BARRIER: ADD'L DEPTH ✱ TYPE 1 DES. 2	JUNCTION BOXES	STRUCTURE NUMBER
								CY	CY	CY	CY	LB	EACH		VF		EACH		EACH		VF		EACH	VF✱	CF	
1	R012,R014	STA. 21+90, 32.00' RT ℄ RAMP D	CONST. INLET GPI TYPE 2, DES 8 OVER EXISTING 18" RCP	GPI–5		635.51	632.78												1			–				1
2	R012,R014	STA. 22+20, 45.00' LT ℄ RAMP D	CONST. INLET SMD TYPE 2, OVER EXISTING 24" RCP	SMD–4		636.99	633.89																			2
3	R012,R014	STA. 21+50, 9.50' LT ℄ RAMP D	CONST. 4'X4'X4.70' JCT. BOX AT EX. AREA INLET, STUB 4 LF 24" RCP FROM EX. PIPE	MJB–4,SPI–5,SPB–2,FHTCP–4		637.00	632.30		2	1.50															36.35	3
4	R013,R015	STA. 40+35, 33.14' LT ℄ RAMP D	CONST. INLET–LONG. BARRIER–TYPE 1, DES 2 STUB 90 LF 15" RCP,S=0.40% THRU WALL "C" TO PAVED DITCH	SSIF–5,CIG–4,SPI–5,SPB–2,FHTCP–4,CLB–2, SHEET R036		650.26	647.60	48	25														1	–		4
5	R013,R016	STA. 43+65, 16.00' LT ℄ RAMP D	CONST. INLET–LONG. BARRIER–TYPE 1, DES 2 STUB 40 LF 15" RCP,S=0.40% THRU WALL "C" TO PAVED DITCH	SSIF–5,CIG–5,SPI–5,SPB–2,FHTCP–4,CLB–2		649.71	646.16	19	10														1	0.88		5
6	R013,R015	STA. 42+50, 16.44' LT ℄ RAMP D	CONST. INLET–LONG. BARRIER–TYPE 1, DES 2 STUB 41 LF 15" RCP,S=0.40% THRU WALL "C" TO PAVED DITCH	SSIF–5,CIG–5,SPI–5,SPB–2,FHTCP–4,CLB–2		649.79	646.84	20	11														1	0.28		6
7	R011,R020	STA. 106+50, 17.00' LT ℄ RAMP G	CONST. INLET CI DES. 2, STUB 18 LF 18" RCP, S=0.30% TO PCES	CI–2,SSIF–5,CIG–4,SPI–5,SPB–2,FHTCP–4	641.32	640.94	638.27	7	5				1		–												7
8	R011,R018	STA. 5+04, 10.00' RT ℄ RAMP B	CONST. INLET CI DES. 3 OVER EXISTING 18" RCP, CONSTRUCT CONCRETE TOP OVER EXISING CURB INLET	CI–2,SSIF–5,CIGI–4, SHEET R035	636.00	635.62	631.58			0.52				1		1.37											8
9	R011,R018	STA. 1+31, 10.00' RT ℄ RAMP H	CONST. INLET CI DES. 3 OVER EXISTING 18" RCP, CONSTRUCT CONCRETE TOP OVER EXISING CURB INLET	CI–2,SSIF–5,CIGI–4, SHEET R035	638.08	637.70	633.32			0.52				1		1.71											9
10	R011,R018	STA. 4+11, 10.00' RT ℄ RAMP H	CONST. INLET CI DES. 2, STUB 15 LF 15" RCP, S=1.00% TO PCES	CI–2,SSIF–5,CIG–4,SPI–5,SPB–2,FHTCP–4	644.86	644.49	641.61	6	4				1		0.21												10
11	R012,R019	STA. 5+00, 10.00' RT ℄ RAMP E	CONST. INLET CI DES. 3, STUB 10 LF 18" RCP, S=0.30% TO EXISTING 18" RCP WITH 12"W X 4"T CONC. COLLAR	CI–2,SSIF–5,CIG–4,SPI–5,SPB–2,FHTCP–4	644.48	644.10	641.06	4	3					1		0.37											11
12	R012,R034	STA. 619+79, 3.44' LT ℄ SURVEY I–44	CONST. INLET–LONG. BARRIER–TYPE 1, DES 2 STUB 6 LF 15" RCP,S=1.67% TO STR 13	SSIF–5,CIG–4,SPI–5,SPB–2,FHTCP–4,CLB–2, SHEET R036		640.27	637.60	3	2														1	–		12
13	R012,R034	STA. 619+79, 3.28' RT ℄ SURVEY I–44	CONST. INLET–LONG. BARRIER–TYPE 1, DES 2 STUB 8 LF 15" RCP,S=1.88% TO STR 14	SSIF–5,CIG–4,SPI–5,SPB–2,FHTCP–4,CLB–2, SHEET R036		640.27	637.50	4	3														1	0.10		13
14	R012,R034	STA. 619+90, 7.75' RT ℄ SURVEY I–44	CONST. SPECIAL JUNCTION BOX	SEE SHEET R034		640.10	637.35			1.71		142															14
15	R012,R034	STA. 619+90, 56.56' RT ℄ SURVEY I–44	CONST. INLET–LONG. BARRIER–TYPE 1, DES 2 STUB 4 LF 15" RCP,S=1.50% TO STR 16	SSIF–5,CIG–4,SPI–5,SPB–2,FHTCP–4,CLB–2, SHEET R036		639.83	636.16	2	1														1	1.00		15
16	R012,R034	STA. 619+90, 62' RT ℄ SURVEY I–44	CONST. SPECIAL JUNCTION BOX, STUB 52 LF 15" RCP, S=0.30% TO STR 18	SPI–5,SPB–2,FHTCP–4, SEE SHEET R034		638.85	636.10	26	17	1.71		142															16
17	R012,R034	STA. 619+30, 53.35' RT ℄ SURVEY I–44	CONST. INLET–LONG. BARRIER–TYPE 1, DES 2 STUB 8 LF 15" RCP,S=2.38% TO STR 18	SSIF–5,CIG–4,SPI–5,SPB–2,FHTCP–4,CLB–2, SHEET R036		639.80	636.13	4	3														1	1.00		17
18	R012,R034	STA. 619+34, 62' RT ℄ SURVEY I–44	CONST. SPECIAL JUNCTION BOX	SEE SHEET R034		638.69	635.94			1.71		142															18
19	R012,R034	STA. 620+65, 53.92' LT ℄ SURVEY I–44	CONST. INLET–LONG. BARRIER–TYPE 1, DES 2 STUB 40 LF 15" RCP,S=1.78% TO STR 20	SSIF–5,CIG–4,SPI–5,SPB–2,FHTCP–4,CLB–2, SHEET R036		640.46	636.79	20	13														1	–		19
20	R012,R034	STA. 621+10, 55.94' LT ℄ SURVEY I–44	CONST. INLET–LONG. BARRIER–TYPE 1, DES 2 STUB 4 LF 15" RCP,S=3.00% TO EXISTING PIPE WITH COLLAR.	SSIF–5,CIG–4,SPI–5,SPB–2,FHTCP–4,CLB–2, SHEET R036		641.25	636.08	3	2														1	2.50		20
21	R011,R020	STA. 108+66, 46.00' LT ℄ RAMP G	CONST. INLET GPI TYPE 1, DES 1 STUB 28 LF 18" RCP,S=5.25% TO STR 22	GPI–5,SPI–5,SPB–2,FHTCP–4		636.50	633.77	11	6																		21
22	R011,R020	STA. 108+92, 41.00' LT ℄ RAMP G	CONST. 4' DIA MH	MFC–5,MJB–4		638.30	632.30										1				–						22
							TOTAL	177	107	7.67		426	2	3	0.21	3.45	1		1				9	5.76	36.35	

✱ PROVIDED FOR INFORMATION ONLY. INCLUDE IN PRICE BID FOR INLET OR JUNCTION BOX.

SUMMARY OF DRAINAGE STRUCTURES CONTINUED

STRUCTURE NUMBER	SMD: INLET TYPE 2	SMD: INLET	SMD: ✱ ADD'L DEPTH TYPE 2	SMD: ✱ ADD'L DEPTH	PIPE QUANTITIES: REINFORCED CONCRETE PIPE – ROUND 15"	18"	24"		PREFAB. CULVERT END SECTION (ROUND) 15"	18"	MANHOLE: 4' DIAMETER STD.	MANHOLE: 4' DIAMETER ADD'L DEPTH	✱ M.H. FRAME AND COVER	✱ INLET FRAME AND GRATE	✱ CAST IRON CURB INLET	SEE SPECIAL NOTES THIS SHEET
	EA				LF				EA		EA	VF	EA	EA	EA	
1	1		–													
2																
3							4						–			
4					90									2		
5					40									2		
6					41									2		
7						18				1				2	2	1
8														4	4	1
9														4	4	1
10					15				1					2	2	1
11						10								4	4	1
12					6									2		
13					8									2		
14																
15					4									2		
16					52											
17					8									2		
18																
19					40									2		
20					4									2		
21						28										
22											1	–				
TOTAL	1				308	56	4		1	1	1			34	16	

✱ PROVIDED FOR INFORMATION ONLY. INCLUDE IN PRICE BID FOR INLET OR JUNCTION BOX.

DRAINAGE STRUCTURES GENERAL NOTES:

1. TOP ELEVATION GIVEN FOR G.P.I. STRUCTURE IS FL INLET, AS SHOWN ON ODOT STD. GPI–5
2. PIPE LENGTHS ARE COMPUTED FROM INSIDE WALL OF INLET TO INSIDE WALL OF INLET. WHERE PCES IS USED, PIPE LENGTH IS COMPUTED DEDUCTING LENGTH "C" AS SHOWN ON ODOT STD. PCES–5.
3. TRENCH EXCAVATION AND STANDARD BEDDING MATERIAL QUANTITIES ARE BASED ON COMPUTED LENGTHS OF PIPE, INCLUDING LENGTH "C" AS SHOWN ON ODOT STD. PCES–5 WHERE APPLICABLE.

DRAINAGE STRUCTURES SPECIAL NOTES:

1. 4" MOUNTABLE CURB INLET

SUMMARY OF EARTHWORK QUANTITIES

LOCATION: STATION (CTR. LINE OR REF. LINE)	202(A)1200 UNCLASSIFIED EXCAVATION	(1) EMBANKMENT +15% (NOT A PAY QTY.)	EXCESS EXCAVATION (NOT A PAY QTY.)	202(D)2500 UNCLASSIFIED BORROW	WASTE (NOT A PAY QTY.)
	CY	CY	CY	CY	CY
PHASE 1A STA 95+51 TO STA 110+50, RAMP "G"	940	155			
PHASE 1B STA 95+51 TO STA 130+18, RAMP "G"	2,100	1,573			
PHASE 1C STA 95+51 TO STA 110+50, RAMP "G"	0	660			
PHASE 2 STA 0+00 TO STA 7+47, RAMP "H"	630	352			
PHASE 2 STA 0+00 TO STA 7+47, RAMP "E"	925	175			
PHASE 3 STA 36+87 TO STA 41+19, RAMP "F"	50	2,367			
PHASE 3 STA 26+00 TO STA 51+13, RAMP "D"	615	21,600			
(2) SUBTOTAL PHASE 1 THRU PHASE 3	5,260	26,882		21,622	
PHASE 4 STA 0+42 TO STA 11+56, RAMP "B"	880	372			
PHASE 4 STA 19+63 TO STA 28+50, RAMP "D"	945	3,155			
(3) SUBTOTAL PHASE 4	1,825	3,527		1,702	
PROJECT TOTALS	7,085	–	–	23,324	–

EARTHWORK NOTES:

(1) EMBANKMENT QUANTITIES SHOWN INCLUDE THE FOLLOWING ESTIMATED VOLUMES FOR BACKFILLING BEHIND CURB: RAMP "G"=253 CY, RAMP "H"=112 CY, RAMP "E"=95 CY, RAMP "F"=32 CY AND RAMP "B"=92 CY.

(2) EMBANKMENT QUANTITIES SHOWN FOR RAMP "D" AND RAMP "F" INCLUDE REINFORCED FILL REQUIREMENTS FOR MSE RETAINING WALL "B" AND MSE RETAINING WALL "C" REQUIRED BY DESIGN. QUANTITY SHOWN SHALL BE REDUCED BY THESE REINFORCED FILL VOLUMES. THERE IS POTENTIAL FOR NET WASTE.

(3) EMBANKMENT QUANTITIES SHOWN FOR RAMP "D" INCLUDE REINFORCED FILL REQUIREMENTS FOR MSE RETAINING WALL "A" REQUIRED BY DESIGN. QUANTITY SHOWN SHALL BE REDUCED BY BY THESE REINFORCED FILL VOLUMES. THERE IS POTENTIAL FOR NET WASTE.

SUMMARY OF PAVED DITCH QUANTITIES

SHEET NUMBER	LOCATION: DESCRIPTION OR LOCATION	PAVED DITCH: DESIGN	LENGTH FT	BOTTOM WIDTH FT	CURTAIN WALLS EA	CLASS 'C' CONC. CY	
R012	STA 22+21 TO STA 25+00 RAMP D, LT.	DC–4, DES. 1	334	4	5	26	
R012,R035	STA 27+04 TO STA 29+32 RAMP D, LT.	DC–4, DES. 1	338	2	5	19	(1)
R012,R035	STA 27+27 RAMP D, RT. SLOPE DRAIN	SEE SHEET R035	11 & 57	2		5	(1)
R013	STA 37+87 TO STA 40+77 RAMP D, LT.	DC–4, DES. 1	373	4	6	30	
R013	STA 36+87 TO STA 48+55 RAMP F, RT.	DC–4, DES. 1	1,152	2	13	61	
R011	STA 8+66 TO STA 9+69 RAMP B, RT.	DC–4, DES. 1	100	2	2	6	
R012	STA 8+76 TO STA 9+16 RAMP E, RT.	DC–4, DES. 1	42	2	2	3	
R011	STA 11+28 TO STA 11+74 RAMP E, RT.	DC–4, DES. 1	46	2	2	3	
					TOTAL	153	

DITCH QUANTITY NOTE:

(1) INCLUDES VOLUME FOR SPLASH BASIN. SEE SHEET R035.

SUMMARY OF CURB OPENING QUANTITIES

SHEET NUMBER	LOCATION: DESCRIPTION OR LOCATION	PAVED FLUME: DESIGN	LENGTH FT	OPENING WIDTH FT	CURTAIN WALLS EA	CLASS 'C' CONC. CY
R013	STA 37+07 ℄ RAMP F, RT.	SSCD–4, DES. 2	16.50	4	2	1.37
R013	STA 98+50 ℄ RAMP G, RT.	SSCD–4, DES. 1	24.00	3	2	1.33
R011	STA 100+80 ℄ RAMP G, RT.	SSCD–4, DES. 1	26.00	3	2	1.44
R011	STA 101+11 ℄ RAMP G, RT.	SSCD–4, DES. 2	9.00	4	2	0.80
R011	STA 103+50 ℄ RAMP G, LT.	SSCD–4, DES. 1	26.00	3	2	1.44
R009	STA 110+86 ℄ RAMP G, RT.	SSCD–4, DES. 2	9.00	4	2	0.80
R011	STA 114+33 ℄ RAMP G, RT.	SSCD–4, DES. 1	13.00	3	2	0.82
					TOTAL	8.00

REGISTERED PROFESSIONAL ENGINEER RODNEY SEWELL 16173 OKLAHOMA 9/17/21

Design	CKS	INTERCHANGE (OPERATIONAL IMPROVEMENTS) TULSA COUNTY
Drawn	CKD	**SUMMARY SHEET (ROADWAY)**
Checked	CKE	
Approved		
Squad	C & K	JOB PIECE NO. 10981(05) SHEET NO. AX03

REVISIONS		
REV. NO.	DESCRIPTION	DATE

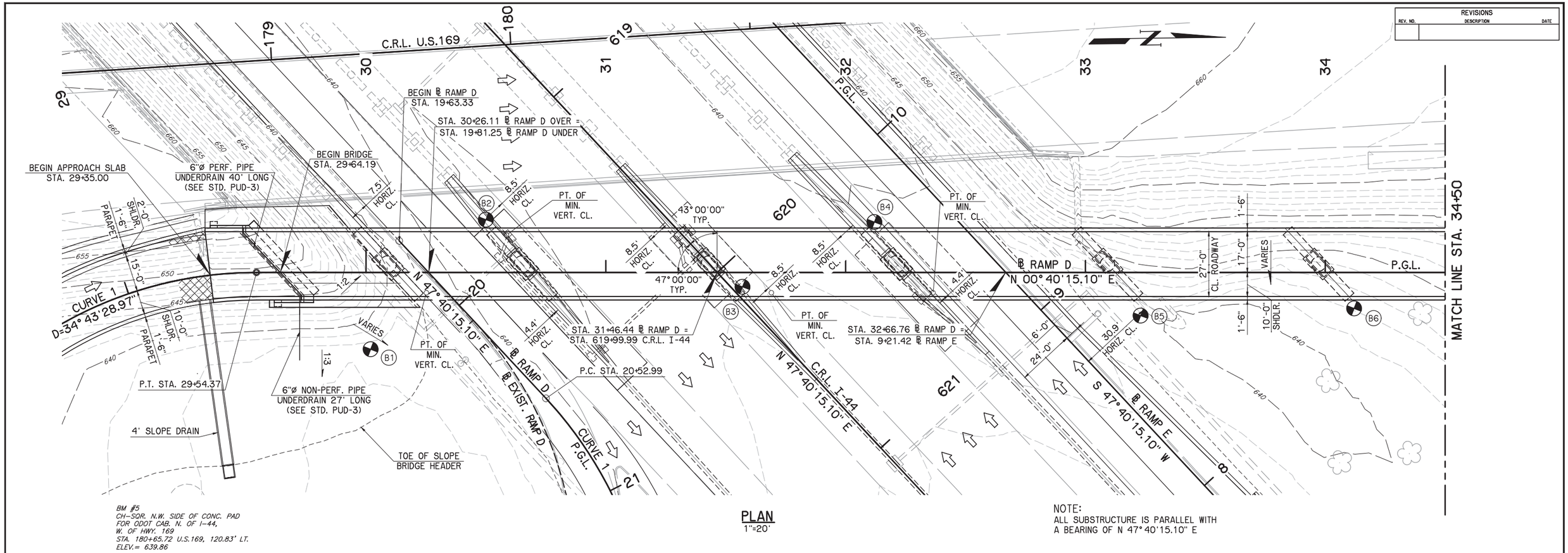

PLAN
1"=20'

NOTE:
ALL SUBSTRUCTURE IS PARALLEL WITH
A BEARING OF N 47° 40'15.10" E

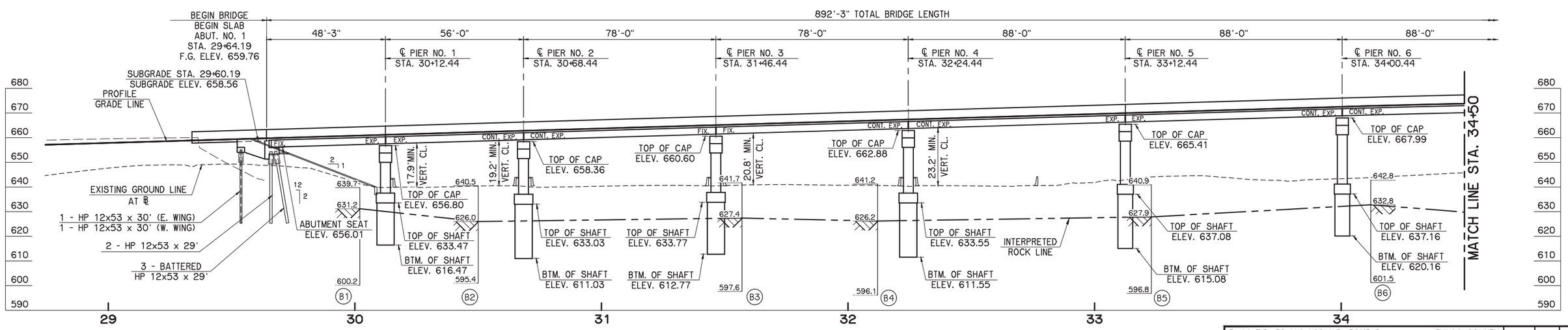

ELEVATION
1"=20'

NOTE:
FOR DESIGN DATA AND INDEX OF SHEETS, SEE SHEET B002.
FOR HORIZONTAL CURVE DATA, PROFILE GRADE DATA,
FOUNDATION DATA AND SUMMARY OF BRIDGE QUANTITIES, SEE
SHEET B003.

USE INTERPRETED ROCK LINE FOR
ESTIMATING PURPOSES ONLY.

I-44 E.B. TO U.S.169 N.B. RAMP D — TULSA COUNTY

GENERAL PLAN AND ELEVATION (1 OF 3)
48'-56'-(2)78'-(5)88'-104'-88' ℄ GIRDERS SPANS
27'-0" CLR. RDWY. WITH F-SHAPED PARAPETS
43° SKEW RT. FWD., ℄ STA. 34+10.32

Design	CEG
Detail	DRB
Check	AFW

WHITE ENGINEERING ASSOCIATES

STATE OF OKLAHOMA — DEPARTMENT OF TRANSPORTATION

JOB PIECE NO. 10981(05) — SHEET NO. B001

I:\Active\16111\Drawings\B001-B003 PE2.dwg, 7/14/2021 1:00:18 PM, Deanne

REVISIONS		
REV. NO.	DESCRIPTION	DATE

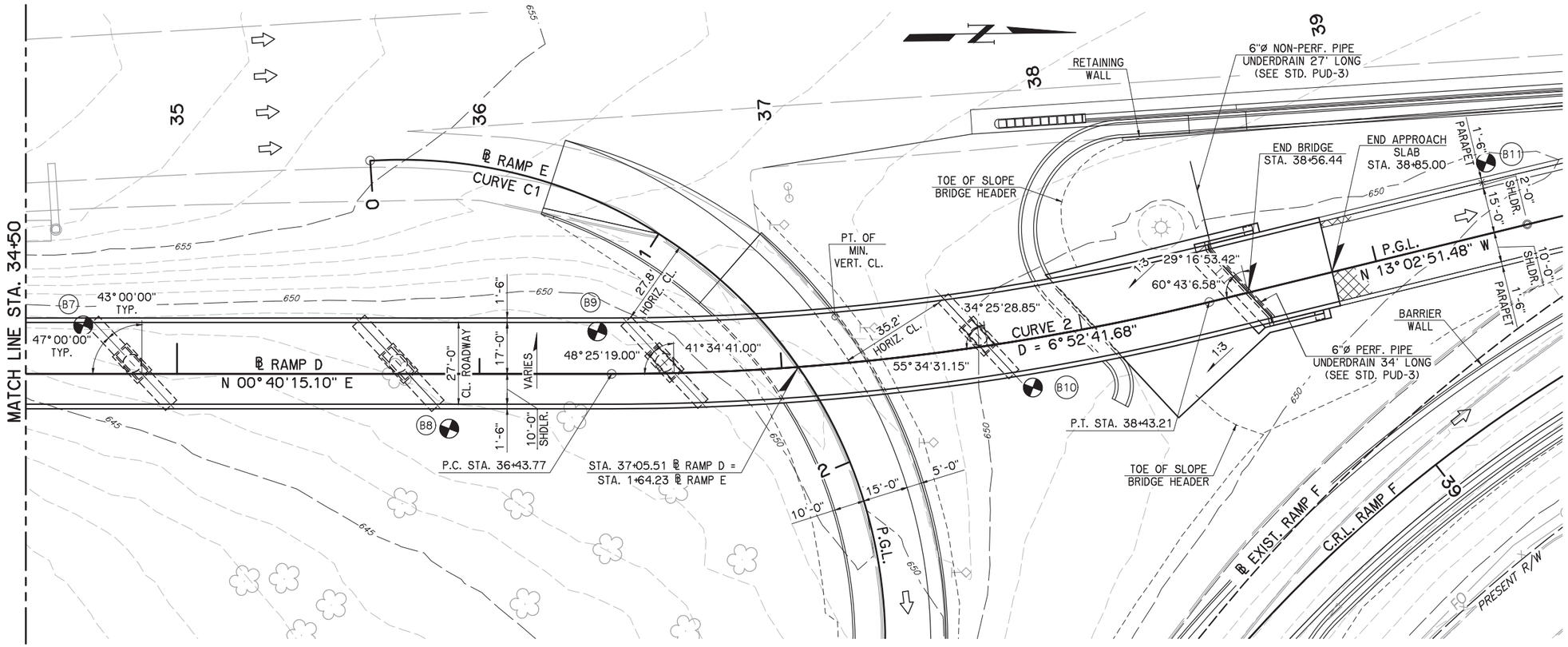

PLAN
1"=20'

BM #6 FND. CH-SQR. ON W. SIDE CONC. BASE L.P.E. OF HWY 169 STA. 187+60.51 U.S.169, 94.08' RT. ELEV. 650.66

NOTE:
ALL SUBSTRUCTURE IS PARALLEL WITH A BEARING OF N 47°40'15.10" E

DESIGN DATA

LOAD AND RESISTANCE FACTOR DESIGN

CONCRETE CLASS AA	f'c = 4 K.S.I.
CONCRETE CLASS A	f'c = 3 K.S.I.
REINFORCING STEEL (GRADE 60)	fy = 60 K.S.I.
STRUCTURAL STEEL M270 (GRADE 50W)	Fy = 50 K.S.I.
STAINLESS STEEL A240 (TYPE 316)	Fy = 30 K.S.I.

LOADING:
- HL-93 OR OKLAHOMA OVERLOAD TRUCK OR TYPE 315 OVERLOAD TRUCK
- 20 PSF FUTURE WEARING SURFACE
- 5 PSF STAY-IN-PLACE DECK FORM ALLOWANCE

DESIGN:
- AASHTO LRFD BRIDGE DESIGN SPECIFICATIONS, 8th EDITION
- ANSI/AASHTO/AWS D1.5 BRIDGE WELDING CODE
- ANSI/AWS D1.6 STRUCTURAL WELDING CODE - STAINLESS STEEL

HL-93 INVENTORY RATING FACTOR: 1.21
HL-93 OPERATING RATING FACTOR: 1.56

INDEX OF SHEETS

A001 - A002	GENERAL NOTES & SUMMARY OF PAY QUANTITIES (BRIDGE)
B001 - B003	GENERAL PLAN AND ELEVATION
B004 - B009	SUBSURFACE PROFILE
B010 - B011	SUBSTRUCTURE LAYOUT
B012 - B017	ABUTMENT DETAILS
B018 - B025	PIER DETAILS
B026 - B046	SUPERSTRUCTURE DETAILS
B047 - B048	APPROACH SLAB DETAILS
B049	SLOPE WALL DETAILS

STANDARDS

EJ-SK-04E
EJ-DTL-02E
HP1-2-01E
FSHP-42-2-00E
LECS-5-0
PUD-4-0
LTU-5-0

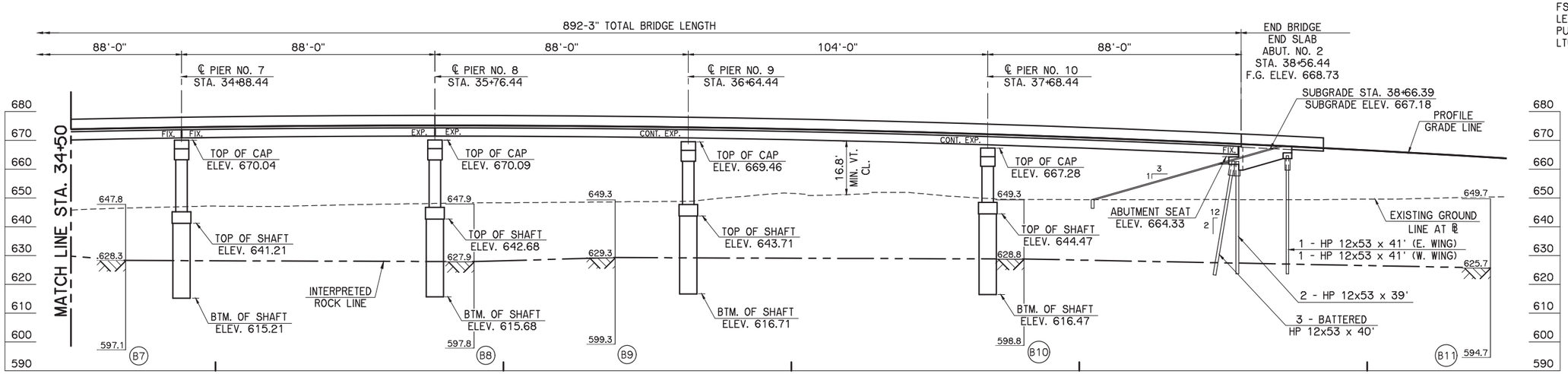

ELEVATION
1"=20'

NOTE:
FOR HORIZONTAL CURVE DATA, PROFILE GRADE DATA, FOUNDATION DATA AND SUMMARY OF BRIDGE QUANTITIES, SEE SHEET B003.

USE INTERPRETED ROCK LINE FOR ESTIMATING PURPOSES ONLY.

I-44 E.B. TO U.S.169 N.B. RAMP D — TULSA COUNTY

GENERAL PLAN AND ELEVATION (2 OF 3)
48'-56'-(2)78'-(5)88'-104'-88' ℄ GIRDERS SPANS
27'-0" CLR. RDWY. WITH F-SHAPED PARAPETS
43° SKEW RT. FWD., ℄ STA. 34+10.32

Design	CEG	
Detail	DRB	
Check	AFW	

WHITE ENGINEERING ASSOCIATES

STATE OF OKLAHOMA — DEPARTMENT OF TRANSPORTATION
JOB PIECE NO. 10981(05) — SHEET NO. B002

I:\Active\1611\Drawings\B001-B003 PE2.dwg, 7/15/2021 8:54:50 AM, Deanne

REVISIONS		
REV. NO.	DESCRIPTION	DATE

SUMMARY OF QUANTITIES

ITEM DESCRIPTION	UNIT	PHASE 1	PHASE 2	PHASE 3						TOTAL
		PIERS	PIERS	ABUTMENTS	PIERS	SUPERSTR.	APP. SLABS	SLOPE WALL	SUBTOTAL	
SUBSTRUCTURE EXCAVATION COMMON	C.Y.	372	98	190	285				475	945
CLSM BACKFILL	C.Y.			161.3					161.3	161.3
ENGINEERED FALSEWORK	L.SUM					1			1	1
APPROACH SLAB	S.Y.						190.6		190.6	190.6
SAW-CUT GROOVING	S.Y.					2,678.2	171.7		2,849.9	2,849.9
42" F-SHAPED PARAPET	L.F.					1,785.5	113.9		1,899.4	1,899.4
STRUCTURAL STEEL	LB.					874,110			874,110	874,110
STAINLESS STEEL FIXED BEARING ASSEMBLY	EA.					24			24	24
STAINLESS STEEL EXP. BEARING ASSEMBLY	EA.					56			56	56
ELASTOMERIC COATING	S.F.	1,892.7	305.3	347.8	932.4				1,280.2	3,478.2
CLASS AA CONCRETE	C.Y.					695.8			695.8	695.8
CLASS A CONCRETE	C.Y.	459.2	81.9	67.1	226.7				293.8	834.9
SLOPE WALL (5")	S.Y.							580	580	580
EPOXY COATED REINFORCING STEEL	LB.	67,830	11,640	9,050	32,920	189,290			231,260	310,730
PILES, FURNISHED (HP12x53)	L.F.			485					485	485
PILES, DRIVEN (HP12x53)	L.F.			485					485	485
PILE SPLICE, H-PILE (NON-BIDDABLE)	EA.			1					1	1
WATER REPELLENT (VISUALLY INSPECTED)	S.Y.	319	55	39	165	1,616	56		1,876	2,250
DRILLED SHAFTS 72" DIAMETER	L.F.	147								147
DRILLED SHAFTS 84" DIAMETER	L.F.		22		60				60	82
CROSSHOLE SONIC LOGGING	EA.	6	1		3				3	10
SEALED EXPANSION JOINTS	L.F.					112.66			112.66	112.66
SEALER CRACK PREPARATION	L.F.					323			323	323
SEALER RESIN	GAL.					3.6			3.6	3.6
6" PERFORATED PIPE UNDERDRAIN ROUND	L.F.			73					73	73
6" NON-PERF. PIPE UNDERDRAIN RND.	L.F.			60					60	60

FOUNDATION DATA

HP12x53 PILING

DESIGN CRITERIA	ABUTMENT 1	ABUTMENT 2
FACTORED PILE REACTION	67.4 TONS	83.3 TONS
PILE LENGTH	30.0 FT	41.0 FT

72" DIAMETER DRILLED SHAFTS

DESIGN CRITERIA	PIERS 5-6	PIERS 7-8	PIER 9	PIER 10
MINIMUM DEPTH INTO ROCK	12.00 FT	12.00 FT	12.00 FT	12.00 FT
DEPTH OF ROCK NEGLECTED FOR FRICTION	3.00 FT	3.00 FT	3.00 FT	3.00 FT
UNIT BEARING RESISTANCE	43.13 TSF	43.13 TSF	43.13 TSF	43.13 TSF
BEARING RESISTANCE FACTOR	0.56	0.56	0.56	0.56
FACTORED BEARING RESISTANCE	682.9 TONS	682.9 TONS	682.9 TONS	682.9 TONS
UNIT FRICTION RESISTANCE	9.00 TSF	9.00 TSF	9.00 TSF	9.00 TSF
FRICTION RESISTANCE FACTOR	0.36	0.36	0.36	0.36
FACTORED FRICTION RESISTANCE	549.7 TONS	549.7 TONS	549.7 TONS	549.7 TONS
TOTAL FACTORED RESISTANCE	1,233 TONS	1,233 TONS	1,233 TONS	1,233 TONS
TOTAL FACTORED REACTION	936.9 TONS	947.5 TONS	1,070.0 TONS	1,062.8 TONS

84" DIAMETER DRILLED SHAFTS

DESIGN CRITERIA	PIER 1	PIER 2	PIER 3	PIER 4
MINIMUM DEPTH INTO ROCK	14.00 FT	14.00 FT	14.00 FT	14.00 FT
DEPTH OF ROCK NEGLECTED FOR FRICTION	3.00 FT	3.00 FT	3.00 FT	3.00 FT
UNIT BEARING RESISTANCE	21.50 TSF	21.50 TSF	21.50 TSF	21.50 TSF
BEARING RESISTANCE FACTOR	0.56	0.56	0.56	0.56
FACTORED BEARING RESISTANCE	46.34 TONS	46.34 TONS	46.34 TONS	46.34 TONS
UNIT FRICTION RESISTANCE	9.00 TSF	9.00 TSF	9.00 TSF	9.00 TSF
FRICTION RESISTANCE FACTOR	0.36	0.36	0.36	0.36
FACTORED FRICTION RESISTANCE	783.8 TONS	783.8 TONS	783.8 TONS	783.8 TONS
TOTAL FACTORED RESISTANCE	1,247 TONS	1,247 TONS	1,247 TONS	1,247 TONS
TOTAL FACTORED REACTION	693.4 TONS	806.5 TONS	877.5 TONS	922.1 TONS

FACTORED PILE RESISTANCE:
DRIVE PILING THROUGH THE COMPACTED FILL AND TO A POINT BEARING ON SOLID FOUNDATION MATERIAL AT THE APPROXIMATE ELEVATION SHOWN ON THE PLANS. IF A FACTORED AXIAL LOAD RESISTANCE EQUAL TO OR GREATER THAN THE FACTORED PILE REACTION IS NOT OBTAINED AT THIS ELEVATION, CONTINUE DRIVING UNTIL SUCH IS OBTAINED. THE LENGTH OF STEEL PILING SHOWN ON THE PLANS IS FOR ESTIMATING PURPOSES ONLY.

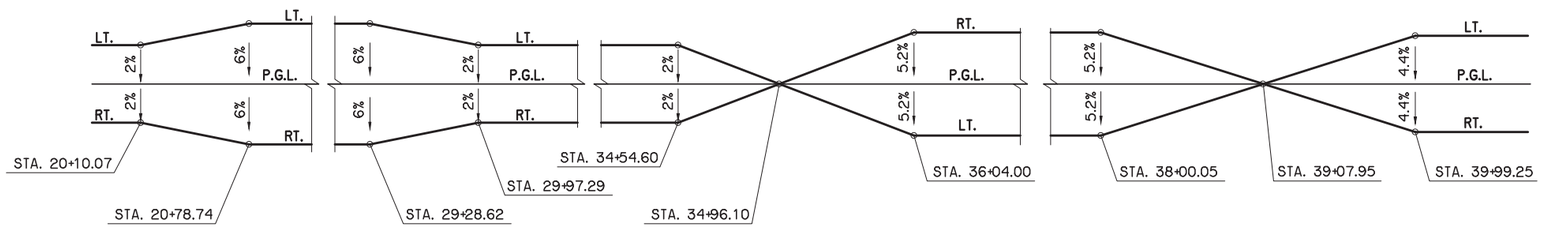

SUPERELEVATION TRANSITION DATA
RAMP D

CURVE 1 DATA
P.C. STA. 20+52.99
P.T. STA. 29+54.37
Δ = 313°00'00.00"
R = 165.0000'
D = 34°43'28.97"
T = 71.74'
L = 901.3753'
E = 344.92'

CURVE 2 DATA
P.I. STA. 37+43.97
Δ = 13°43'06.58"
R = 833.0000'
D = 6°52'41.68"
T = 100.2030'
L = 199.4476'
E = 6.0051'

CURVE C1 DATA
P.I. STA. 4+48.0076
Δ = 140°41'34.66"
R = 160.00'
D = 35°48'35.50"
T = 448.0076'
L = 392.8889'
E = 315.7213'

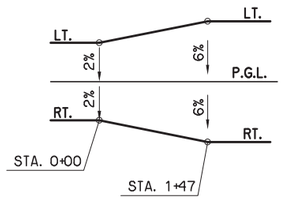

SUPERELEVATION TRANSITION DATA
AT BEGINNING OF RAMP E

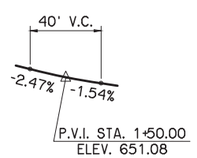

VERTICAL PROFILE DATA
RAMP E UNDER SPAN 10

NOTE:
NO PROFILE AVAILABLE FOR I-44 ON RAMP E UNDER SPAN 5. MINIMUM VERTICAL CLEARANCE WERE DETERMINED WITH SPOT ELEVATIONS PROVIDED BY SURVEY.

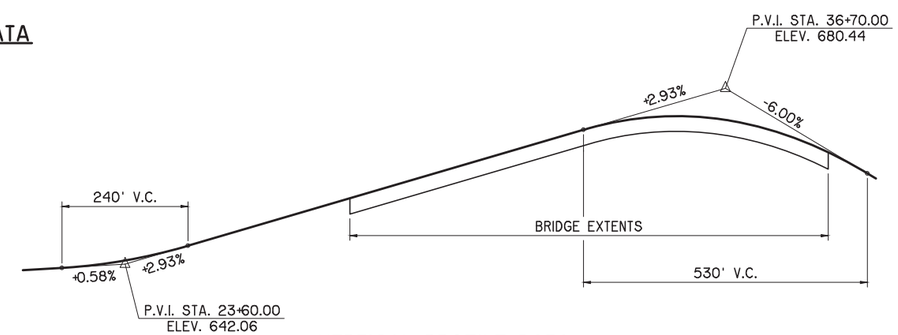

VERTICAL PROFILE DATA
RAMP D

WHITE ENGINEERING ASSOCIATES, INC.

PREPARED BY:
THIS SEAL APPLIES TO SHEET NOS:
AB01-AB02, B001-B049

Augustine F. Wuertz
AUGUSTINE F. WUERTZ
LICENSE NO. 29197

7-15-2021
DATE

LICENSED PROFESSIONAL ENGINEER
AUGUSTINE F. WUERTZ
29197
OKLAHOMA
CA 1832
6-30-23

I-44 E.B. TO U.S.169 N.B. RAMP D — TULSA COUNTY

GENERAL PLAN AND ELEVATION (3 OF 3)
48'-56'-(2)78'-(5)88'-104'-88' ℄ GIRDERS SPANS
27'-0" CLR. RDWY. WITH F-SHAPED PARAPETS
43° SKEW RT. FWD., ℄ STA. 34+10.32

Design	CEG	
Detail	DRB	
Check	AFW	

WHITE ENGINEERING ASSOCIATES

STATE OF OKLAHOMA — DEPARTMENT OF TRANSPORTATION
JOB PIECE NO. 10981(05) — SHEET NO. B003

I:\Active\1611\Drawings\B001-B003 PE2.dwg, 7/14/2021 1:02:07 PM, Deanne

REVISIONS		
REV. NO.	DESCRIPTION	DATE

BORING NO. B-1
STATION 30+02 OFFSET 32' RT. OF C.R.L. Ramp D
(November 08, 2018)

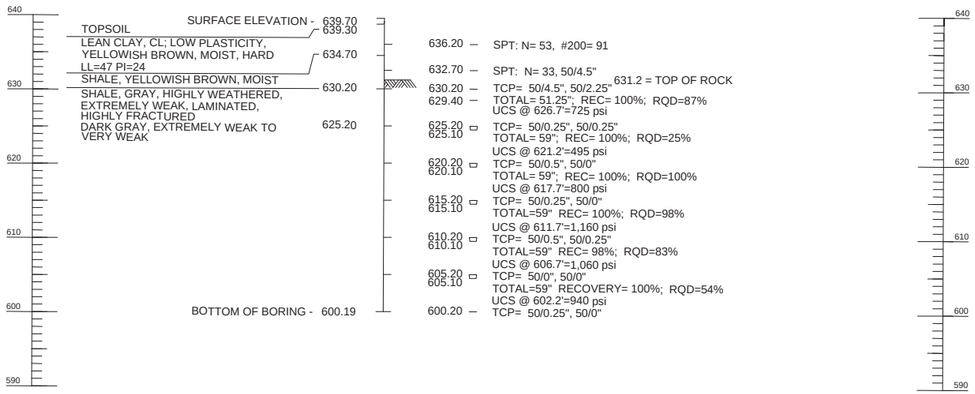

BORING NO. B-2
STATION 30+50 OFFSET 22' LT. OF C.R.L. Ramp D
(October 30, 2018)

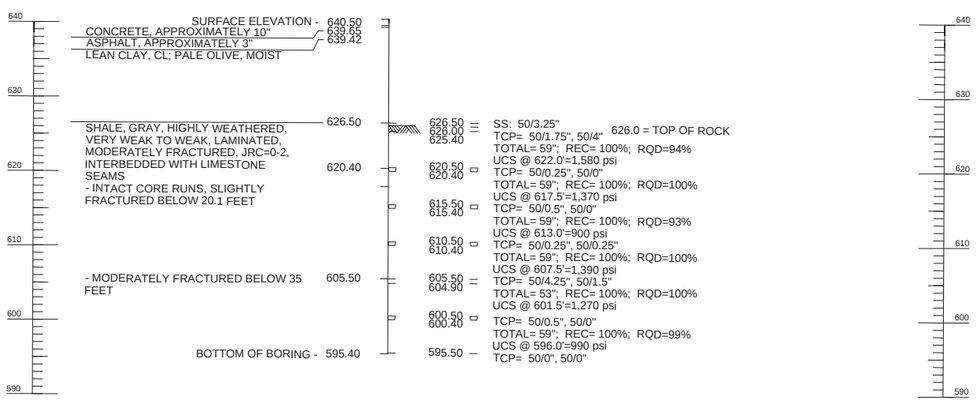

LEGEND

V	= VERY	DCD	= DIAMOND CORE DRILLING, ASTM D2113-83
FL	= FAIRLY	SPT	= STANDARD PENETRATION TEST, ASTM D1586
SL	= SLIGHTLY	SS	= SPLIT SPOON SAMPLER
LT	= LIGHT	N	= NUMBER OF BLOWS PER 12 INCHES
TR	= TRACE	MC	= MOISTURE CONTENT
BLK	= BLACK	LL	= LIQUID LIMIT (NV=NO VALUE)
		PI	= PLASTICITY INDEX (NP=NO PLASTICITY)
		#200	= PERCENT PASSING #200 SIEVE
		UCS	= UNCONFINED COMPRESSIVE STRENGTH
		TCP	= TEXAS CONE PENETROMETER
		WCI	= WET CAVE IN
		▽	= WATER LEVEL WHILE DRILLING OR SAMPLING
		▼	= WATER LEVEL AFTER DRILLING
		▼	= WATER LEVEL 24 HOURS AFTER DRILLING
			= TOP OF ROCK

NOTE: WATER LEVEL ELEVATIONS SHOWN WERE OBTAINED AT THE TIME THE BORINGS WERE DRILLED AND MAY FLUCTUATE THROUGHT THE YEAR.

NOTE: "SS" DENOTED STANDARD PENETRATION TEST, AASHTO D1586-84. "TCP" DENOTES TEXAS CONE PENETRATION TEST.

* NOTE: TOP OF ROCK LINE SHOWN FOR ESTIMATING PURPOSE ONLY.
** NOTE: WATER LEVEL ELEVATION SHOWN WERE OBTAINED AT THE TIME THE BORINGS WERE DRILLED AND MAY FLUCTUATE THROUGHOUT THE YEAR.
*** NOTE: ROCK CLASSIFICATION IS BASED ON DRILLING CHARACTERISTICS AND VISUAL OBSERVATION OF ROCK CORE SAMPLES. PETROGRAPHIC ANALYSIS OF THIN SECTIONS OF THE ROCK CORE SAMPLES MAY REVEAL OTHER TYPES.

GEOTECHNICAL REPORT

ALL GEOTECHNICAL INFORMATION CONTAINED ON THIS SHEET IS COVERED BY THE ENGINEERING SEAL AFFIXED TO AN ORIGINAL GEOTECHNICAL ENGINEERING REPORT THAT HAS BEEN STAMPED AND SEALED BY A PROFESSIONAL ENGINEER LICENSED IN OKLAHOMA. TH OBTAIN A COPY OF THE COMPLETE REPORT, CONTACT THE ODOT OFFICE ENGINEER AT (405) 521-2625. THE CONTRACTOR SHOULD BE FULLY AWARE OF THE SITE CONDITIONS PRIOR TO BEGINNING WORK. ANY ADDITIONAL GEOTECHNICAL INFORMATION WHICH MAY BE DESIRED IS THE RESPONSIBILITY OF THE CONTRACTOR.

SITE GEOLOGY

ACCORDING TO THE "ENGINEERING CLASSIFICATION OF GEOLOGIC MATERIALS - DIVISION EIGHT" FROM THE OKLAHOMA DEPARTMENT OF TRANSPORTATION (1969), THE ALIGNMENT APPEARS TO BE LOCATED WITHIN THE NOWATA UNIT (Pn).

NOWATA UNIT (Pn): THIS UNIT RANGES FROM A CLAY SHALE TO A BROWNISH SANDY SHALE. THE NOWATA UNIT ALSO INCLUDES A MINOR AMOUNT OF LENTICULAR SANDSTONE AND IN THE LOWER PORTIONS, A FEW LIMESTONE SEAMS THAT LESS THAN ONE FOOT THICK.

KLEINFELDER
Bright People. Right Solutions.

BRIDGE "A" TULSA COUNTY
US HIGHWAY 169 OVER INTERSTATE 44

SUBSURFACE PROFILE
(SHEET 1 OF 6)

Design	XX	XX
Detail	XX	XX
Check	XX	XX
Squad: XXXXXX		
Engr.: XXXXXX		

STATE OF OKLAHOMA
DEPARTMENT OF TRANSPORTATION
JOB PIECE NO. 10981(05)
SHEET NO. B004

REVISIONS		
REV. NO.	DESCRIPTION	DATE

BORING NO. B-3
STATION 31+57 OFFSET 6' RT. OF C.R.L. Ramp D
(November 05, 2018)

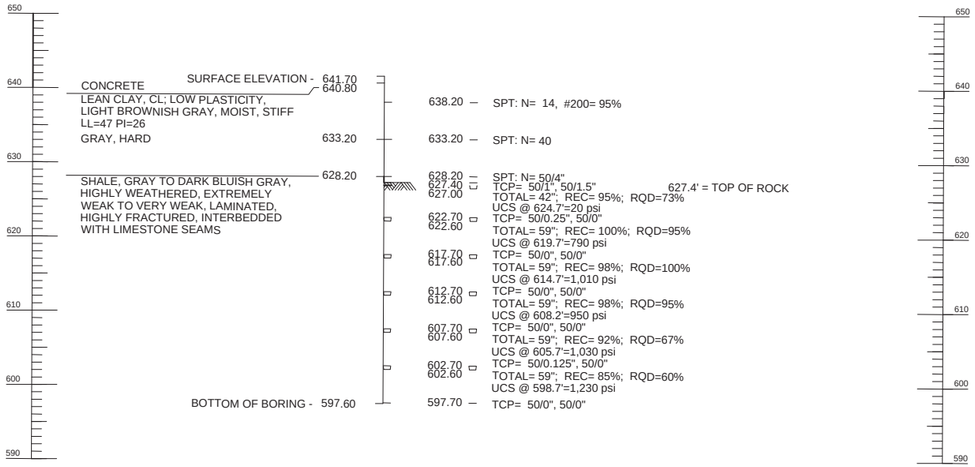

BORING NO. B-4
STATION 32+12 OFFSET 21' LT. OF C.R.L. Ramp D
(November 01, 2018)

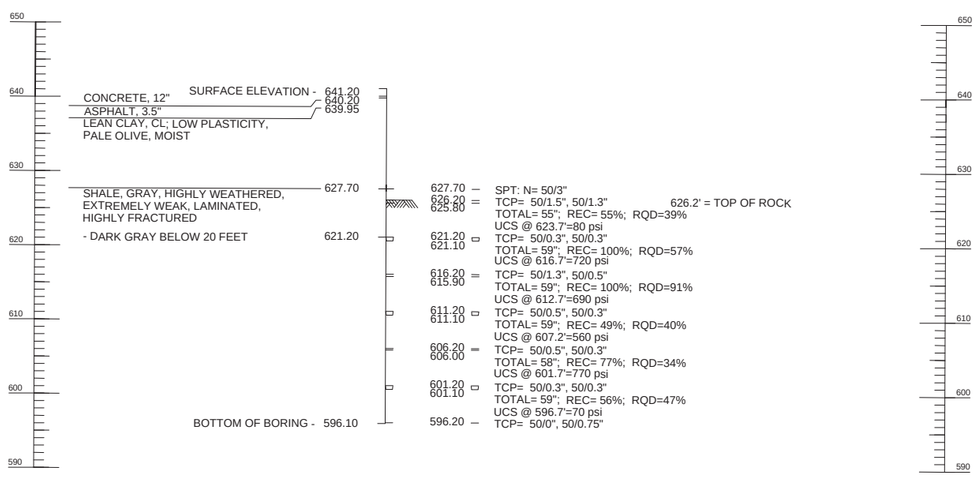

LEGEND

V	= VERY	DCD	= DIAMOND CORE DRILLING, ASTM D2113-83
FL	= FAIRLY	SPT	= STANDARD PENETRATION TEST, ASTM D1586
SL	= SLIGHTLY	SS	= SPLIT SPOON SAMPLER
LT	= LIGHT	N	= NUMBER OF BLOWS PER 12 INCHES
TR	= TRACE	MC	= MOISTURE CONTENT
BLK	= BLACK	LL	= LIQUID LIMIT (NV=NO VALUE)
		PI	= PLASTICITY INDEX (NP=NO PLASTICITY)
		#200	= PERCENT PASSING #200 SIEVE
		UCS	= UNCONFINED COMPRESSIVE STRENGTH
		TCP	= TEXAS CONE PENETROMETER
		WCI	= WET CAVE IN
		▽	= WATER LEVEL WHILE DRILLING OR SAMPLING
		▼	= WATER LEVEL AFTER DRILLING
		▼	= WATER LEVEL 24 HOURS AFTER DRILLING
		▨	= TOP OF ROCK

NOTE: WATER LEVEL ELEVATIONS SHOWN WERE OBTAINED AT THE TIME THE BORINGS WERE DRILLED AND MAY FLUCTUATE THROUGHT THE YEAR.

NOTE: "SS" DENOTED STANDARD PENETRATION TEST, AASHTO D1586-84. "TCP" DENOTES TEXAS CONE PENETRATION TEST.

* NOTE: TOP OF ROCK LINE SHOWN FOR ESTIMATING PURPOSE ONLY.
** NOTE: WATER LEVEL ELEVATION SHOWN WERE OBTAINED AT THE TIME THE BORINGS WERE DRILLED AND MAY FLUCTUATE THROUGHOUT THE YEAR.
*** NOTE: ROCK CLASSIFICATION IS BASED ON DRILLING CHARACTERISTICS AND VISUAL OBSERVATION OF ROCK CORE SAMPLES. PETROGRAPHIC ANALYSIS OF THIN SECTIONS OF THE ROCK CORE SAMPLES MAY REVEAL OTHER TYPES.

GEOTECHNICAL REPORT

ALL GEOTECHNICAL INFORMATION CONTAINED ON THIS SHEET IS COVERED BY THE ENGINEERING SEAL AFFIXED TO AN ORIGINAL GEOTECHNICAL ENGINEERING REPORT THAT HAS BEEN STAMPED AND SEALED BY A PROFESSIONAL ENGINEER LICENSED IN OKLAHOMA. TH OBTAIN A COPY OF THE COMPLETE REPORT, CONTACT THE ODOT OFFICE ENGINEER AT (405) 521-2625. THE CONTRACTOR SHOULD BE FULLY AWARE OF THE SITE CONDITIONS PRIOR TO BEGINNING WORK. ANY ADDITIONAL GEOTECHNICAL INFORMATION WHICH MAY BE DESIRED IS THE RESPONSIBILITY OF THE CONTRACTOR.

SITE GEOLOGY

ACCORDING TO THE "ENGINEERING CLASSIFICATION OF GEOLOGIC MATERIALS - DIVISION EIGHT" FROM THE OKLAHOMA DEPARTMENT OF TRANSPORTATION (1969), THE ALIGNMENT APPEARS TO BE LOCATED WITHIN THE NOWATA UNIT (Pn).

NOWATA UNIT (Pn): THIS UNIT RANGES FROM A CLAY SHALE TO A BROWNISH SANDY SHALE. THE NOWATA UNIT ALSO INCLUDES A MINOR AMOUNT OF LENTICULAR SANDSTONE AND IN THE LOWER PORTIONS, A FEW LIMESTONE SEAMS THAT LESS THAN ONE FOOT THICK.

KLEINFELDER
Bright People. Right Solutions.

BRIDGE "A" TULSA COUNTY
US HIGHWAY 169 OVER INTERSTATE 44

SUBSURFACE PROFILE
(SHEET 2 OF 6)

Design	XX	XX
Detail	XX	XX
Check	XX	XX
Squad: XXXXXX		
Engr.: XXXXXX		

STATE OF OKLAHOMA
DEPARTMENT OF TRANSPORTATION
JOB PIECE NO. 10981(05)
SHEET NO. B005

REVISIONS		
REV. NO.	DESCRIPTION	DATE

BORING NO. B-5
STATION 33+23 OFFSET 18' RT. OF C.R.L. Ramp D
(October 25, 2018)

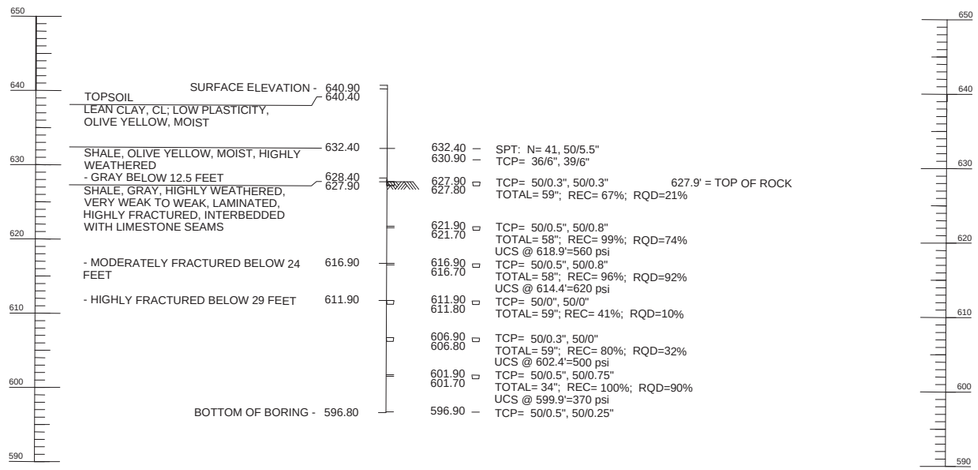

BORING NO. B-6
STATION 34+12 OFFSET 15' RT. OF C.R.L. Ramp D
(October 23, 2018)

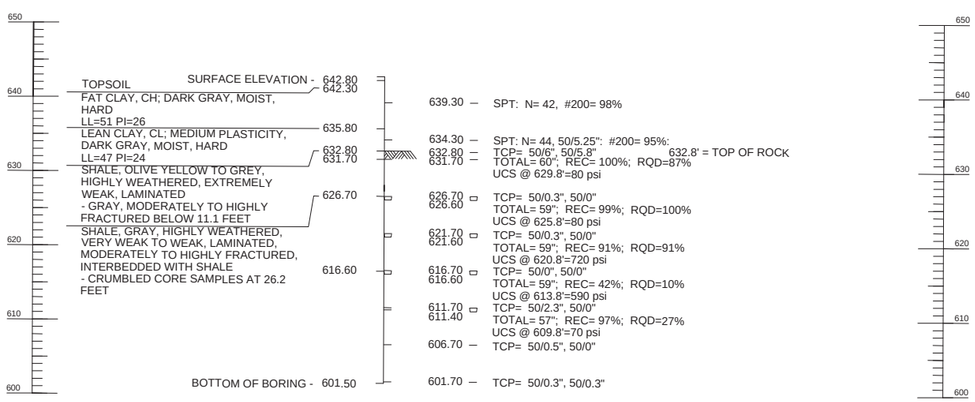

LEGEND

V	= VERY	DCD	= DIAMOND CORE DRILLING, ASTM D2113-83
FL	= FAIRLY	SPT	= STANDARD PENETRATION TEST, ASTM D1586
SL	= SLIGHTLY	SS	= SPLIT SPOON SAMPLER
LT	= LIGHT	N	= NUMBER OF BLOWS PER 12 INCHES
TR	= TRACE	MC	= MOISTURE CONTENT
BLK	= BLACK	LL	= LIQUID LIMIT (NV=NO VALUE)
		PI	= PLASTICITY INDEX (NP=NO PLASTICITY)
		#200	= PERCENT PASSING #200 SIEVE
		UCS	= UNCONFINED COMPRESSIVE STRENGTH
		TCP	= TEXAS CONE PENETROMETER
		WCI	= WET CAVE IN
		▽	= WATER LEVEL WHILE DRILLING OR SAMPLING
		▼	= WATER LEVEL AFTER DRILLING
		▼	= WATER LEVEL 24 HOURS AFTER DRILLING
			= TOP OF ROCK

NOTE: WATER LEVEL ELEVATIONS SHOWN WERE OBTAINED AT THE TIME THE BORINGS WERE DRILLED AND MAY FLUCTUATE THROUGHT THE YEAR.

NOTE: "SS" DENOTED STANDARD PENETRATION TEST, AASHTO D1586-84. "TCP" DENOTES TEXAS CONE PENETRATION TEST.

* NOTE: TOP OF ROCK LINE SHOWN FOR ESTIMATING PURPOSE ONLY.
** NOTE: WATER LEVEL ELEVATION SHOWN WERE OBTAINED AT THE TIME THE BORINGS WERE DRILLED AND MAY FLUCTUATE THROUGHOUT THE YEAR.
*** NOTE: ROCK CLASSIFICATION IS BASED ON DRILLING CHARACTERISTICS AND VISUAL OBSERVATION OF ROCK CORE SAMPLES. PETROGRAPHIC ANALYSIS OF THIN SECTIONS OF THE ROCK CORE SAMPLES MAY REVEAL OTHER TYPES.

GEOTECHNICAL REPORT

ALL GEOTECHNICAL INFORMATION CONTAINED ON THIS SHEET IS COVERED BY THE ENGINEERING SEAL AFFIXED TO AN ORIGINAL GEOTECHNICAL ENGINEERING REPORT THAT HAS BEEN STAMPED AND SEALED BY A PROFESSIONAL ENGINEER LICENSED IN OKLAHOMA. TH OBTAIN A COPY OF THE COMPLETE REPORT, CONTACT THE ODOT OFFICE ENGINEER AT (405) 521-2625. THE CONTRACTOR SHOULD BE FULLY AWARE OF THE SITE CONDITIONS PRIOR TO BEGINNING WORK. ANY ADDITIONAL GEOTECHNICAL INFORMATION WHICH MAY BE DESIRED IS THE RESPONSIBILITY OF THE CONTRACTOR.

SITE GEOLOGY

ACCORDING TO THE "ENGINEERING CLASSIFICATION OF GEOLOGIC MATERIALS - DIVISION EIGHT" FROM THE OKLAHOMA DEPARTMENT OF TRANSPORTATION (1969), THE ALIGNMENT APPEARS TO BE LOCATED WITHIN THE NOWATA UNIT (Pn).

NOWATA UNIT (Pn): THIS UNIT RANGES FROM A CLAY SHALE TO A BROWNISH SANDY SHALE. THE NOWATA UNIT ALSO INCLUDES A MINOR AMOUNT OF LENTICULAR SANDSTONE AND IN THE LOWER PORTIONS, A FEW LIMESTONE SEAMS THAT LESS THAN ONE FOOT THICK.

KLEINFELDER
Bright People. Right Solutions.

BRIDGE "A" TULSA COUNTY
US HIGHWAY 169 OVER INTERSTATE 44

SUBSURFACE PROFILE
(SHEET 3 OF 6)

Design	XX	XX
Detail	XX	XX
Check	XX	XX
Squad: XXXXXX		
Engr.: XXXXXX		

STATE OF OKLAHOMA
DEPARTMENT OF TRANSPORTATION
JOB PIECE NO. 10981(05)
SHEET NO. B006

REVISIONS		
REV. NO.	DESCRIPTION	DATE

BORING NO. B-7
STATION 34+69 OFFSET 16' LT. OF C.R.L. Ramp D
(November 06, 2018)

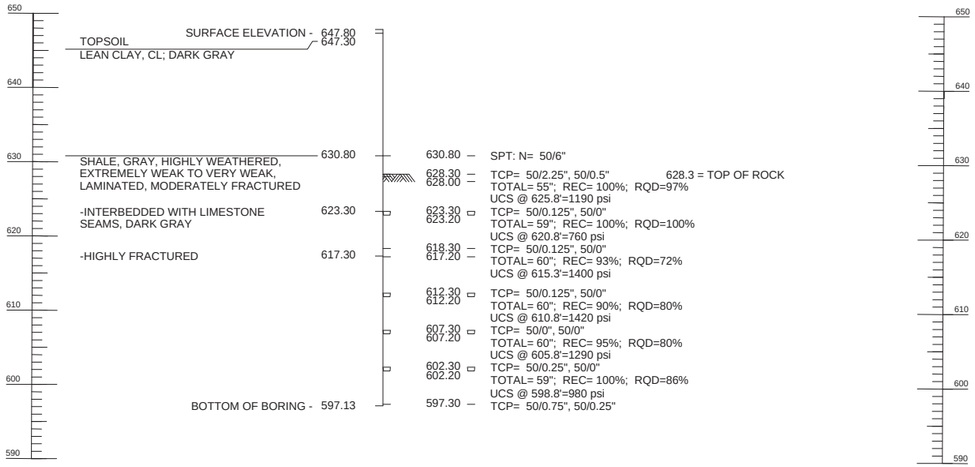

BORING NO. B-8
STATION 35+90 OFFSET 18' RT. OF C.R.L. Ramp D
(October 25, 2018)

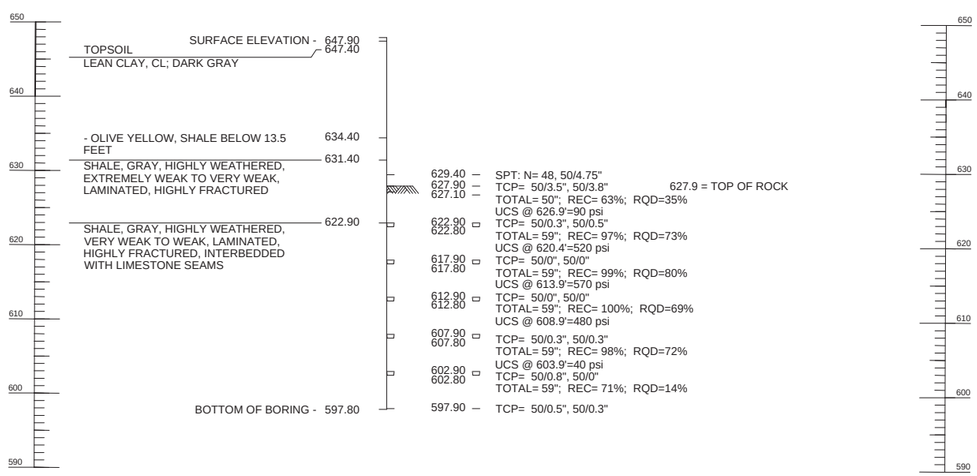

LEGEND

V	= VERY	DCD	= DIAMOND CORE DRILLING, ASTM D2113-83
FL	= FAIRLY	SPT	= STANDARD PENETRATION TEST, ASTM D1586
SL	= SLIGHTLY	SS	= SPLIT SPOON SAMPLER
LT	= LIGHT	N	= NUMBER OF BLOWS PER 12 INCHES
TR	= TRACE	MC	= MOISTURE CONTENT
BLK	= BLACK	LL	= LIQUID LIMIT (NV=NO VALUE)
		PI	= PLASTICITY INDEX (NP=NO PLASTICITY)
		#200	= PERCENT PASSING #200 SIEVE
		UCS	= UNCONFINED COMPRESSIVE STRENGTH
		TCP	= TEXAS CONE PENETROMETER
		WCI	= WET CAVE IN
		▽	= WATER LEVEL WHILE DRILLING OR SAMPLING
		▼	= WATER LEVEL AFTER DRILLING
		▼	= WATER LEVEL 24 HOURS AFTER DRILLING
		▨	= TOP OF ROCK

NOTE: WATER LEVEL ELEVATIONS SHOWN WERE OBTAINED AT THE TIME THE BORINGS WERE DRILLED AND MAY FLUCTUATE THROUGHT THE YEAR.

NOTE: "SS" DENOTED STANDARD PENETRATION TEST, AASHTO D1586-84. "TCP" DENOTES TEXAS CONE PENETRATION TEST.

* NOTE: TOP OF ROCK LINE SHOWN FOR ESTIMATING PURPOSE ONLY.
** NOTE: WATER LEVEL ELEVATION SHOWN WERE OBTAINED AT THE TIME THE BORINGS WERE DRILLED AND MAY FLUCTUATE THROUGHOUT THE YEAR.
*** NOTE: ROCK CLASSIFICATION IS BASED ON DRILLING CHARACTERISTICS AND VISUAL OBSERVATION OF ROCK CORE SAMPLES. PETROGRAPHIC ANALYSIS OF THIN SECTIONS OF THE ROCK CORE SAMPLES MAY REVEAL OTHER TYPES.

GEOTECHNICAL REPORT

ALL GEOTECHNICAL INFORMATION CONTAINED ON THIS SHEET IS COVERED BY THE ENGINEERING SEAL AFFIXED TO AN ORIGINAL GEOTECHNICAL ENGINEERING REPORT THAT HAS BEEN STAMPED AND SEALED BY A PROFESSIONAL ENGINEER LICENSED IN OKLAHOMA. TH OBTAIN A COPY OF THE COMPLETE REPORT, CONTACT THE ODOT OFFICE ENGINEER AT (405) 521-2625. THE CONTRACTOR SHOULD BE FULLY AWARE OF THE SITE CONDITIONS PRIOR TO BEGINNING WORK. ANY ADDITIONAL GEOTECHNICAL INFORMATION WHICH MAY BE DESIRED IS THE RESPONSIBILITY OF THE CONTRACTOR.

SITE GEOLOGY

ACCORDING TO THE "ENGINEERING CLASSIFICATION OF GEOLOGIC MATERIALS - DIVISION EIGHT" FROM THE OKLAHOMA DEPARTMENT OF TRANSPORTATION (1969), THE ALIGNMENT APPEARS TO BE LOCATED WITHIN THE NOWATA UNIT (Pn).

NOWATA UNIT (Pn): THIS UNIT RANGES FROM A CLAY SHALE TO A BROWNISH SANDY SHALE. THE NOWATA UNIT ALSO INCLUDES A MINOR AMOUNT OF LENTICULAR SANDSTONE AND IN THE LOWER PORTIONS, A FEW LIMESTONE SEAMS THAT LESS THAN ONE FOOT THICK.

KLEINFELDER
Bright People. Right Solutions.

BRIDGE "A" TULSA COUNTY
US HIGHWAY 169 OVER INTERSTATE 44

SUBSURFACE PROFILE
(SHEET 4 OF 6)

Design	XX	XX
Detail	XX	XX
Check	XX	XX
Squad: XXXXXX		
Engr.: XXXXXX		

STATE OF OKLAHOMA
DEPARTMENT OF TRANSPORTATION
JOB PIECE NO. 10981(05)
SHEET NO. B007

REVISIONS		
REV. NO.	DESCRIPTION	DATE

BORING NO. B-9
STATION 36+39 OFFSET 14' LT. OF C.R.L. Ramp D
(November 06, 2018)

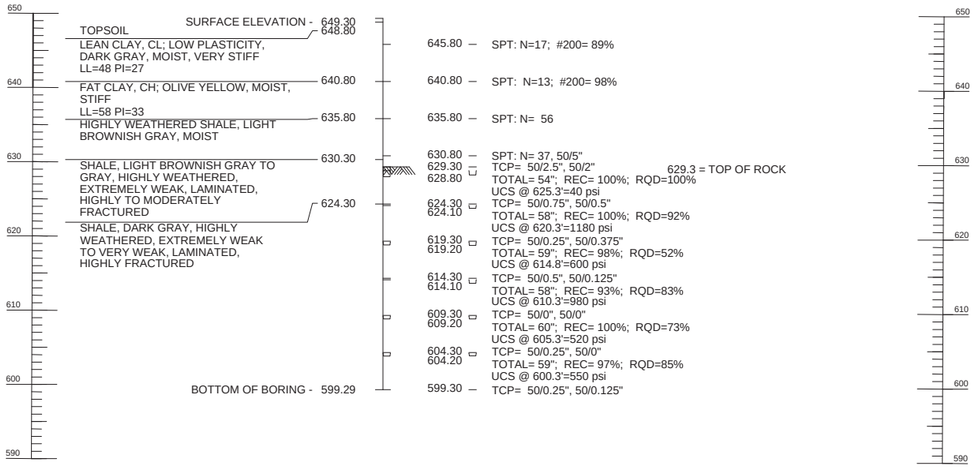

BORING NO. B-10
STATION 37+81 OFFSET 16' RT. OF C.R.L. Ramp D
(November 07, 2018)

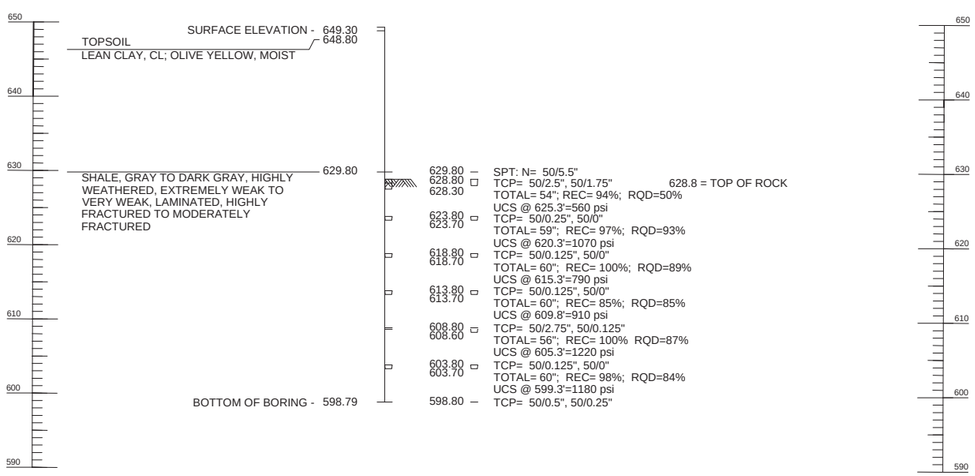

LEGEND

V	= VERY	DCD	= DIAMOND CORE DRILLING, ASTM D2113-83
FL	= FAIRLY	SPT	= STANDARD PENETRATION TEST, ASTM D1586
SL	= SLIGHTLY	SS	= SPLIT SPOON SAMPLER
LT	= LIGHT	N	= NUMBER OF BLOWS PER 12 INCHES
TR	= TRACE	MC	= MOISTURE CONTENT
BLK	= BLACK	LL	= LIQUID LIMIT (NV=NO VALUE)
		PI	= PLASTICITY INDEX (NP=NO PLASTICITY)
		#200	= PERCENT PASSING #200 SIEVE
		UCS	= UNCONFINED COMPRESSIVE STRENGTH
		TCP	= TEXAS CONE PENETROMETER
		WCI	= WET CAVE IN
		▽	= WATER LEVEL WHILE DRILLING OR SAMPLING
		▼	= WATER LEVEL AFTER DRILLING
		▼	= WATER LEVEL 24 HOURS AFTER DRILLING
			= TOP OF ROCK

NOTE: WATER LEVEL ELEVATIONS SHOWN WERE OBTAINED AT THE TIME THE BORINGS WERE DRILLED AND MAY FLUCTUATE THROUGHT THE YEAR.

NOTE: "SS" DENOTED STANDARD PENETRATION TEST, AASHTO D1586-84. "TCP" DENOTES TEXAS CONE PENETRATION TEST.

* NOTE: TOP OF ROCK LINE SHOWN FOR ESTIMATING PURPOSE ONLY.
** NOTE: WATER LEVEL ELEVATION SHOWN WERE OBTAINED AT THE TIME THE BORINGS WERE DRILLED AND MAY FLUCTUATE THROUGHOUT THE YEAR.
*** NOTE: ROCK CLASSIFICATION IS BASED ON DRILLING CHARACTERISTICS AND VISUAL OBSERVATION OF ROCK CORE SAMPLES. PETROGRAPHIC ANALYSIS OF THIN SECTIONS OF THE ROCK CORE SAMPLES MAY REVEAL OTHER TYPES.

GEOTECHNICAL REPORT

ALL GEOTECHNICAL INFORMATION CONTAINED ON THIS SHEET IS COVERED BY THE ENGINEERING SEAL AFFIXED TO AN ORIGINAL GEOTECHNICAL ENGINEERING REPORT THAT HAS BEEN STAMPED AND SEALED BY A PROFESSIONAL ENGINEER LICENSED IN OKLAHOMA. TH OBTAIN A COPY OF THE COMPLETE REPORT, CONTACT THE ODOT OFFICE ENGINEER AT (405) 521-2625. THE CONTRACTOR SHOULD BE FULLY AWARE OF THE SITE CONDITIONS PRIOR TO BEGINNING WORK. ANY ADDITIONAL GEOTECHNICAL INFORMATION WHICH MAY BE DESIRED IS THE RESPONSIBILITY OF THE CONTRACTOR.

SITE GEOLOGY

ACCORDING TO THE "ENGINEERING CLASSIFICATION OF GEOLOGIC MATERIALS - DIVISION EIGHT" FROM THE OKLAHOMA DEPARTMENT OF TRANSPORTATION (1969), THE ALIGNMENT APPEARS TO BE LOCATED WITHIN THE NOWATA UNIT (Pn).

NOWATA UNIT (Pn): THIS UNIT RANGES FROM A CLAY SHALE TO A BROWNISH SANDY SHALE. THE NOWATA UNIT ALSO INCLUDES A MINOR AMOUNT OF LENTICULAR SANDSTONE AND IN THE LOWER PORTIONS, A FEW LIMESTONE SEAMS THAT LESS THAN ONE FOOT THICK.

KLEINFELDER
Bright People. Right Solutions.

BRIDGE "A" TULSA COUNTY
US HIGHWAY 169 OVER INTERSTATE 44

SUBSURFACE PROFILE
(SHEET 5 OF 6)

Design	XX	XX
Detail	XX	XX
Check	XX	XX
Squad: XXXXXX		
Engr.: XXXXXX		

STATE OF OKLAHOMA
DEPARTMENT OF TRANSPORTATION
JOB PIECE NO. 10981(05)
SHEET NO. B008

REVISIONS		
REV. NO.	DESCRIPTION	DATE

BORING NO. B-11
STATION 39+43 OFFSET 23' LT. OF C.R.L. Ramp D
(November 07, 2018)

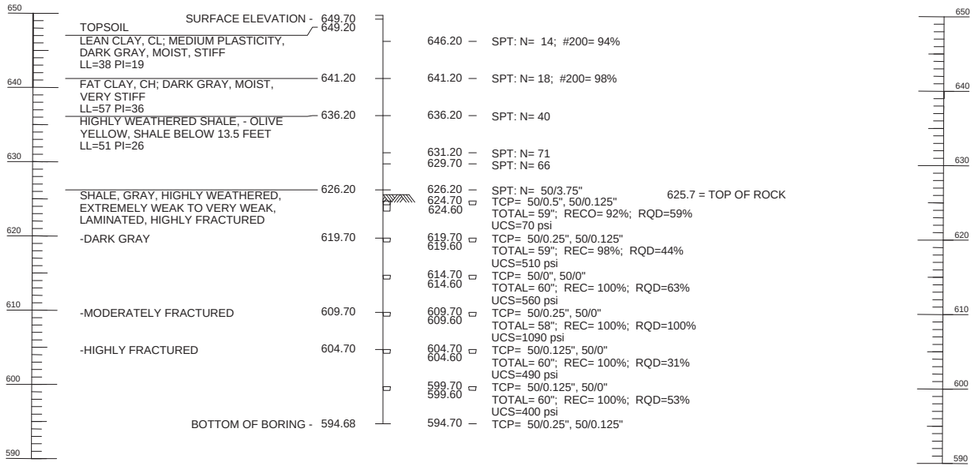

LEGEND

V	= VERY	DCD	= DIAMOND CORE DRILLING, ASTM D2113-83
FL	= FAIRLY	SPT	= STANDARD PENETRATION TEST, ASTM D1586
SL	= SLIGHTLY	SS	= SPLIT SPOON SAMPLER
LT	= LIGHT	N	= NUMBER OF BLOWS PER 12 INCHES
TR	= TRACE	MC	= MOISTURE CONTENT
BLK	= BLACK	LL	= LIQUID LIMIT (NV=NO VALUE)
		PI	= PLASTICITY INDEX (NP=NO PLASTICITY)
		#200	= PERCENT PASSING #200 SIEVE
		UCS	= UNCONFINED COMPRESSIVE STRENGTH
		TCP	= TEXAS CONE PENETROMETER
		WCI	= WET CAVE IN
		▽	= WATER LEVEL WHILE DRILLING OR SAMPLING
		▼	= WATER LEVEL AFTER DRILLING
		▼	= WATER LEVEL 24 HOURS AFTER DRILLING
			= TOP OF ROCK

NOTE: WATER LEVEL ELEVATIONS SHOWN WERE OBTAINED AT THE TIME THE BORINGS WERE DRILLED AND MAY FLUCTUATE THROUGHT THE YEAR.

NOTE: "SS" DENOTED STANDARD PENETRATION TEST, AASHTO D1586-84. "TCP" DENOTES TEXAS CONE PENETRATION TEST.

* NOTE: TOP OF ROCK LINE SHOWN FOR ESTIMATING PURPOSE ONLY.
** NOTE: WATER LEVEL ELEVATION SHOWN WERE OBTAINED AT THE TIME THE BORINGS WERE DRILLED AND MAY FLUCTUATE THROUGHOUT THE YEAR.
*** NOTE: ROCK CLASSIFICATION IS BASED ON DRILLING CHARACTERISTICS AND VISUAL OBSERVATION OF ROCK CORE SAMPLES. PETROGRAPHIC ANALYSIS OF THIN SECTIONS OF THE ROCK CORE SAMPLES MAY REVEAL OTHER TYPES.

GEOTECHNICAL REPORT

ALL GEOTECHNICAL INFORMATION CONTAINED ON THIS SHEET IS COVERED BY THE ENGINEERING SEAL AFFIXED TO AN ORIGINAL GEOTECHNICAL ENGINEERING REPORT THAT HAS BEEN STAMPED AND SEALED BY A PROFESSIONAL ENGINEER LICENSED IN OKLAHOMA. TH OBTAIN A COPY OF THE COMPLETE REPORT, CONTACT THE ODOT OFFICE ENGINEER AT (405) 521-2625. THE CONTRACTOR SHOULD BE FULLY AWARE OF THE SITE CONDITIONS PRIOR TO BEGINNING WORK. ANY ADDITIONAL GEOTECHNICAL INFORMATION WHICH MAY BE DESIRED IS THE RESPONSIBILITY OF THE CONTRACTOR.

SITE GEOLOGY

ACCORDING TO THE "ENGINEERING CLASSIFICATION OF GEOLOGIC MATERIALS - DIVISION EIGHT" FROM THE OKLAHOMA DEPARTMENT OF TRANSPORTATION (1969), THE ALIGNMENT APPEARS TO BE LOCATED WITHIN THE NOWATA UNIT (Pn).

NOWATA UNIT (Pn): THIS UNIT RANGES FROM A CLAY SHALE TO A BROWNISH SANDY SHALE. THE NOWATA UNIT ALSO INCLUDES A MINOR AMOUNT OF LENTICULAR SANDSTONE AND IN THE LOWER PORTIONS, A FEW LIMESTONE SEAMS THAT LESS THAN ONE FOOT THICK.

KLEINFELDER
Bright People. Right Solutions.

BRIDGE "A" TULSA COUNTY
US HIGHWAY 169 OVER INTERSTATE 44

SUBSURFACE PROFILE
(SHEET 6 OF 6)

Design	XX	XX
Detail	XX	XX
Check	XX	XX
Squad: XXXXXX		
Engr.: XXXXXX		

STATE OF OKLAHOMA
DEPARTMENT OF TRANSPORTATION
JOB PIECE NO. 10981(05)
SHEET NO. B009

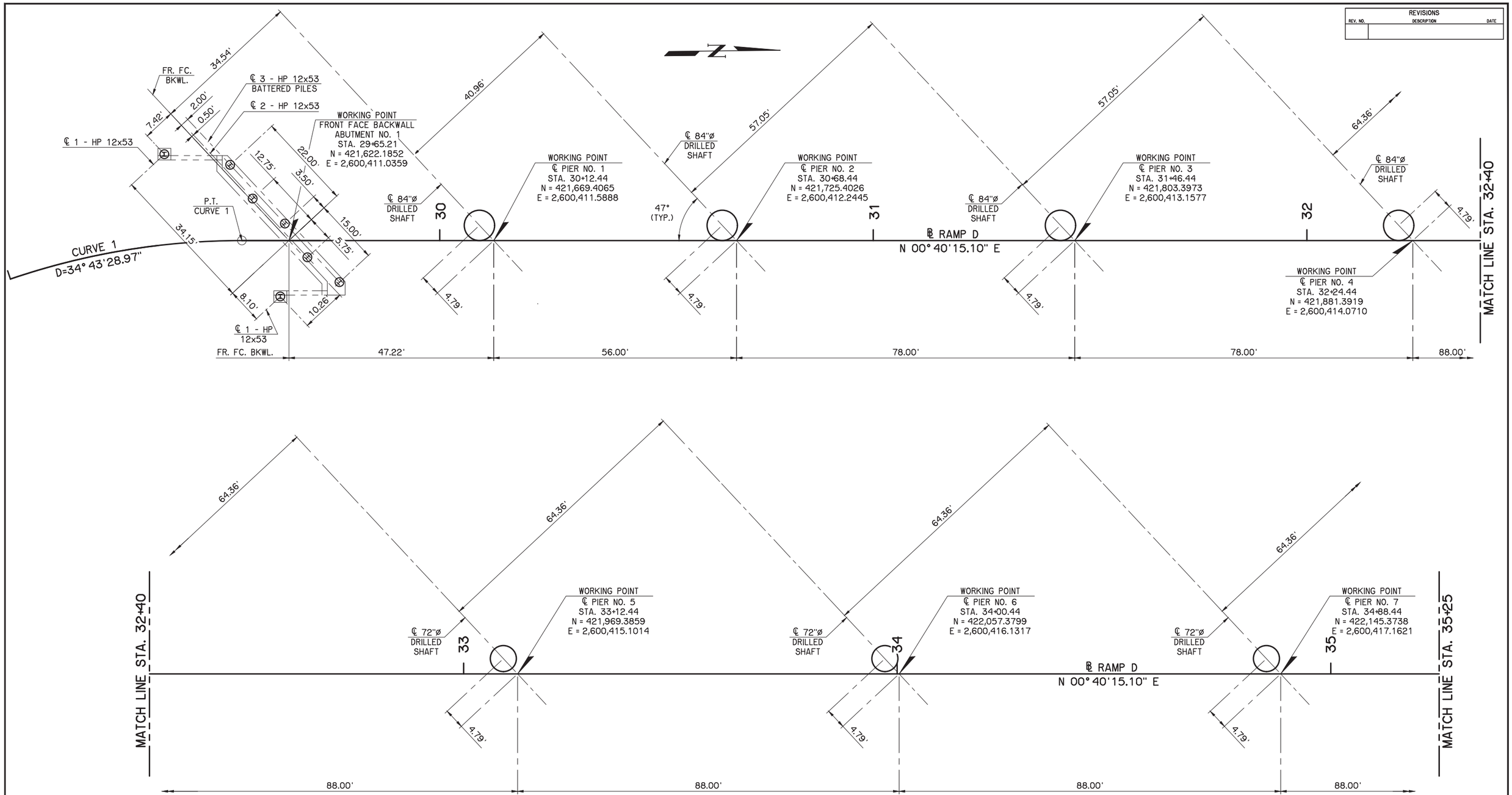

REVISIONS

REV. NO.	DESCRIPTION	DATE

SUBSTRUCTURE LAYOUT

NOTE:
ALL SUBSTRUCTURE IS PARALLEL WITH
A BEARING OF N 47° 40' 15.10" E

I-44 E.B. TO U.S.169 N.B. RAMP D — TULSA COUNTY

SUBSTRUCTURE LAYOUT
SHEET 1 OF 2

Design	AFW	
Detail	DRB	
Check	ADT	

WHITE ENGINEERING ASSOCIATES

STATE OF OKLAHOMA — DEPARTMENT OF TRANSPORTATION

JOB PIECE NO. 10981(05) — SHEET NO. B010

I:\Active\16111\Drawings\B010 Substru layout 1.dwg, 11/2/2020 11:47:15 AM

REVISIONS		
REV. NO.	DESCRIPTION	DATE

NOTE:
ALL SUBSTRUCTURE IS PARALLEL WITH
A BEARING OF N 47° 40'15.10" E

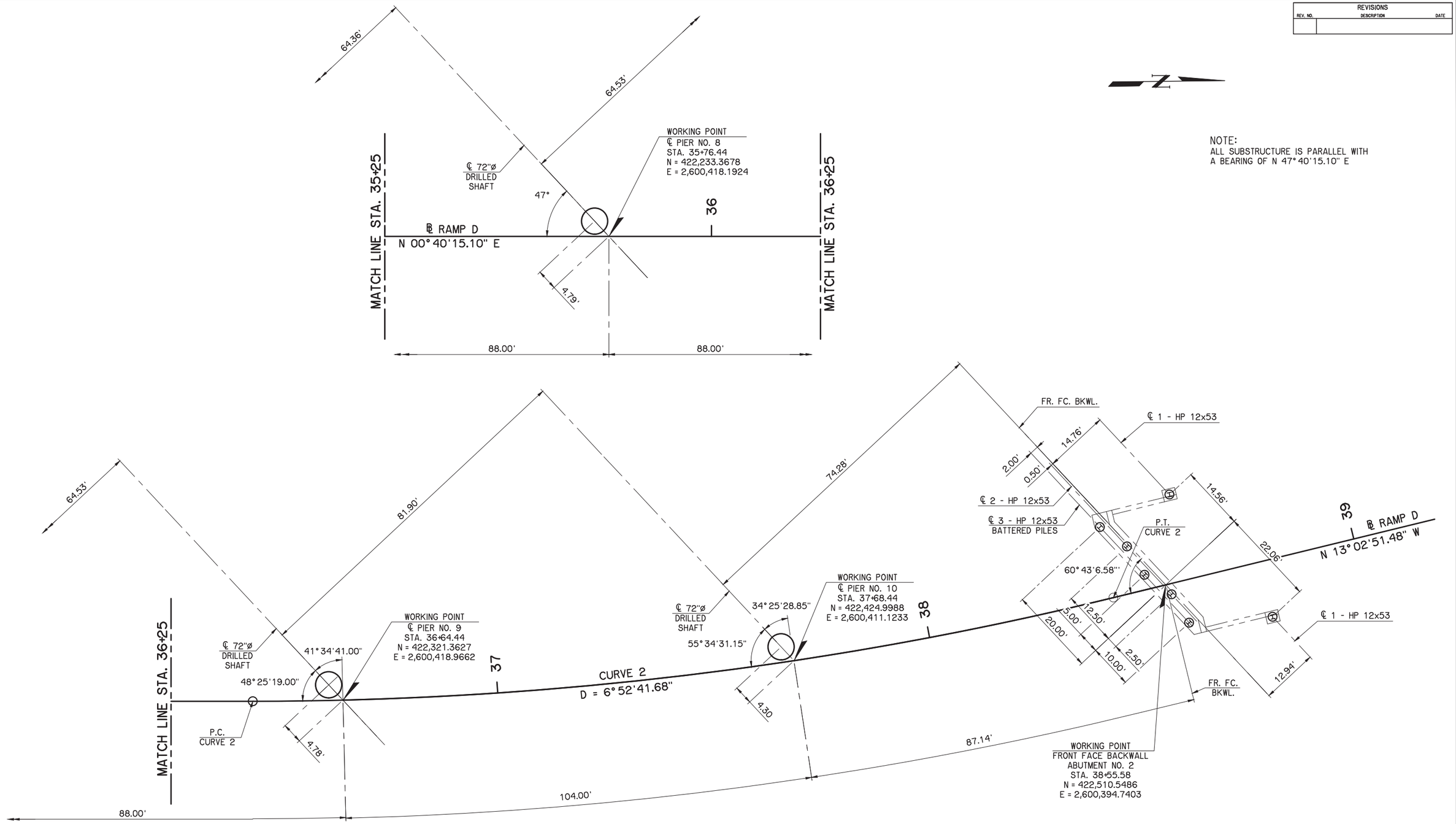

SUBSTRUCTURE LAYOUT

I-44 E.B. TO U.S.169 N.B. RAMP D	TULSA COUNTY	Design	AFW	
SUBSTRUCTURE LAYOUT SHEET 2 OF 2		Detail	DRB	
		Check	ADT	
		WHITE ENGINEERING ASSOCIATES		
STATE OF OKLAHOMA	DEPARTMENT OF TRANSPORTATION			
	JOB PIECE NO. 10981(05)			SHEET NO. B011

I:\Active\16111\Drawings\B011 Substru layout 2.dwg, 11/2/2020 11:47:56 AM

REVISIONS		
REV. NO.	DESCRIPTION	DATE

ALL WT WING REINFORCING TIED TO ABUTMENT SEAT AND BACKWALL REINFORCING MUST BE IN PLACE PRIOR TO PLACING ABUTMENT SEAT AND BACKWALL CONCRETE.

NOTES:
FOR ABUTMENT QUANTITIES, SEE SHEET B013.

FOR WING ELEVATIONS, SEE SHEET B014.

FOR DETAILS A & B AND SURFACE TREATMENT DETAILS, SEE SHEET B015.

FOR BAR LIST AND BAR BENDS, SEE SHEET B016.

FOR ANCHOR BOLT DETAILS, SEE SHEET B038.

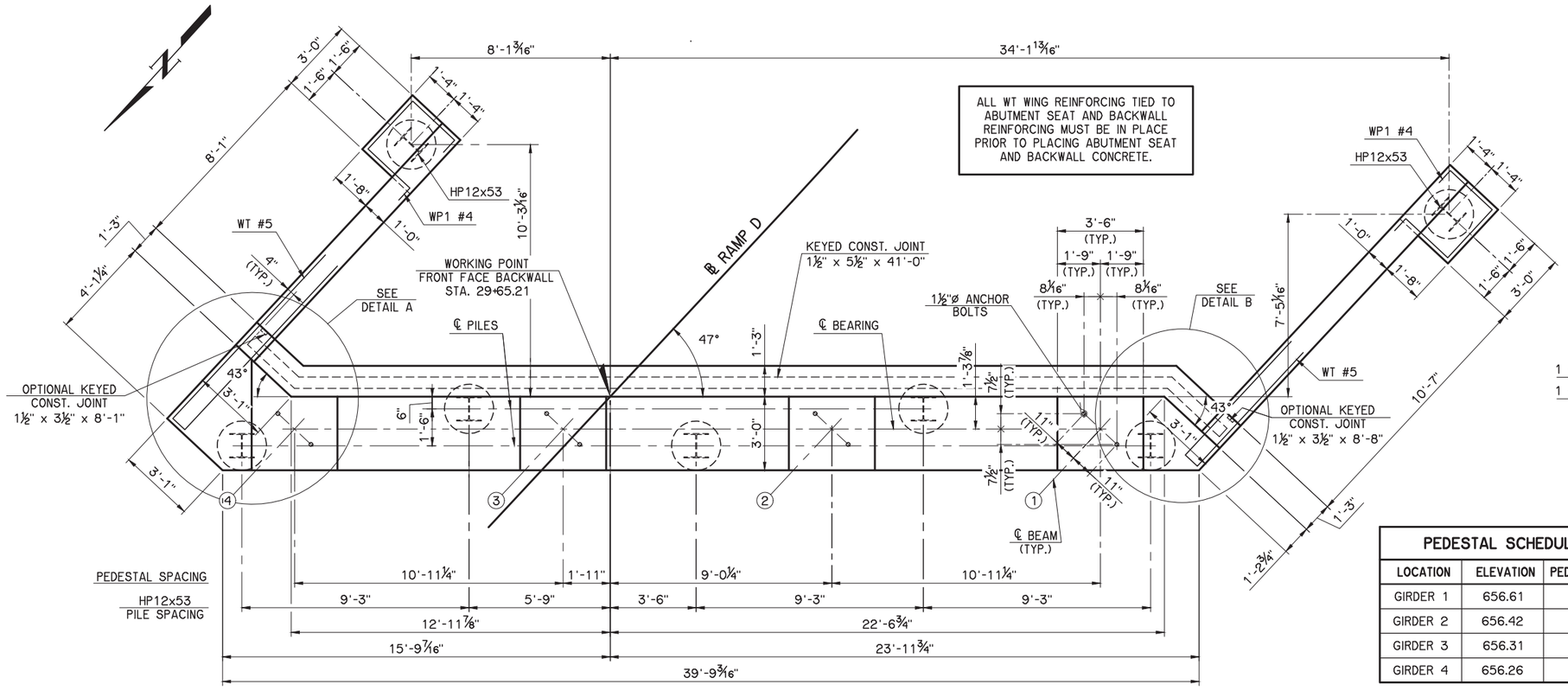

PLAN

PEDESTAL SCHEDULE		
LOCATION	ELEVATION	PED. HEIGHT
GIRDER 1	656.61	7⅛"
GIRDER 2	656.42	4⅞"
GIRDER 3	656.31	3½"
GIRDER 4	656.26	3"

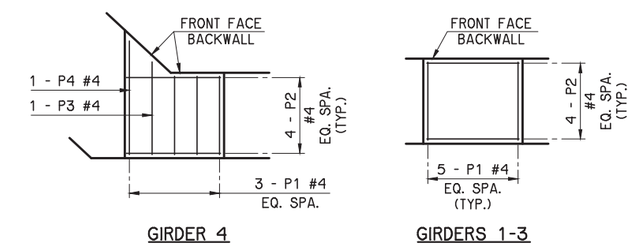

GIRDER 4 GIRDERS 1-3

PEDESTAL REINFORCING

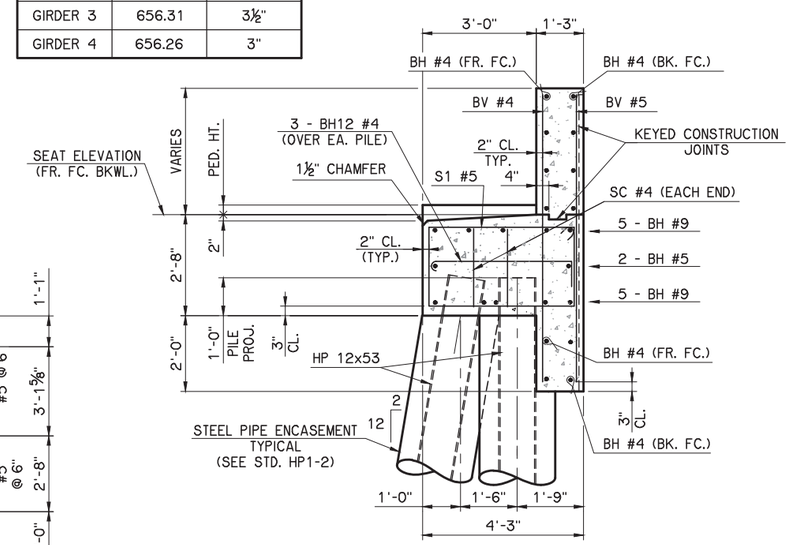

TYPICAL SECTION THRU SEAT
(PERPENDICULAR TO BACKWALL)

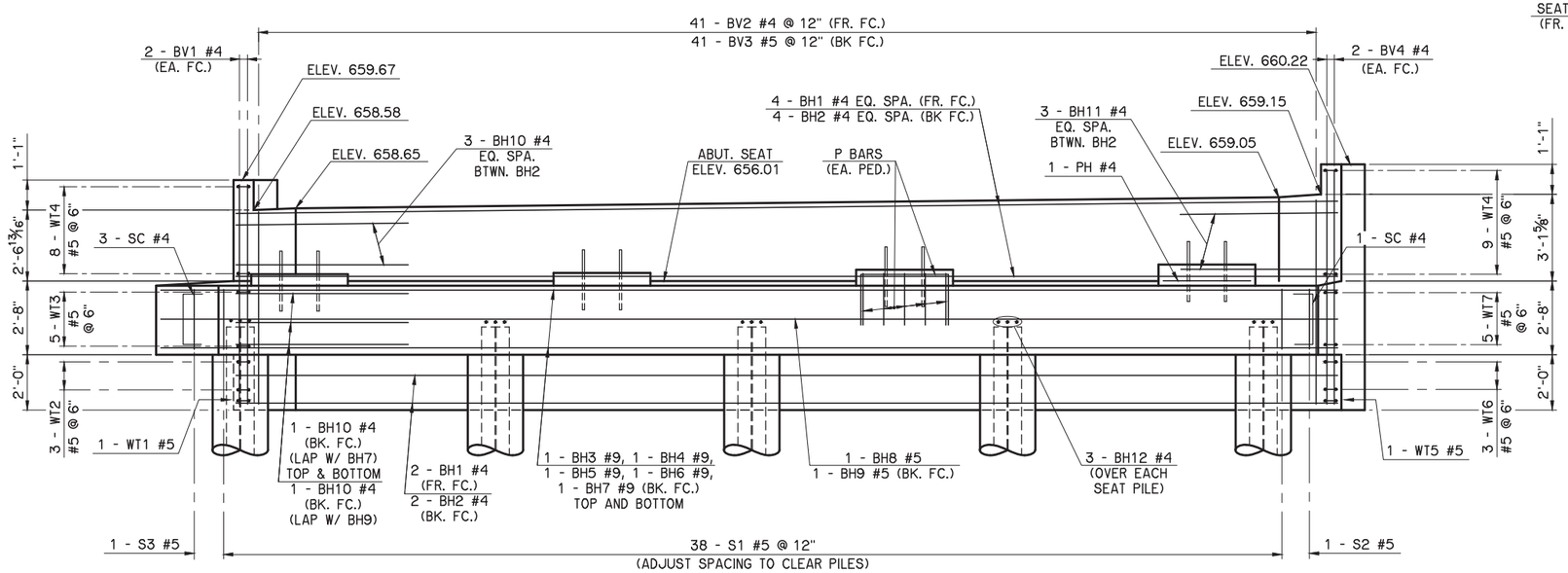

ELEVATION

I-44 E.B. TO U.S.169 N.B. RAMP D — TULSA COUNTY

ABUTMENT DETAILS
SHEET 1 OF 6
ABUTMENT NO. 1

Design	AFW
Detail	DRB
Check	ADT

WHITE ENGINEERING ASSOCIATES

STATE OF OKLAHOMA — DEPARTMENT OF TRANSPORTATION

JOB PIECE NO. 10981(05) — SHEET NO. B012

I:\Active\1611\Drawings\B012 Abut 1.dwg, 11/2/2020 1:12:42 PM, Deanne

REVISIONS		
REV. NO.	DESCRIPTION	DATE

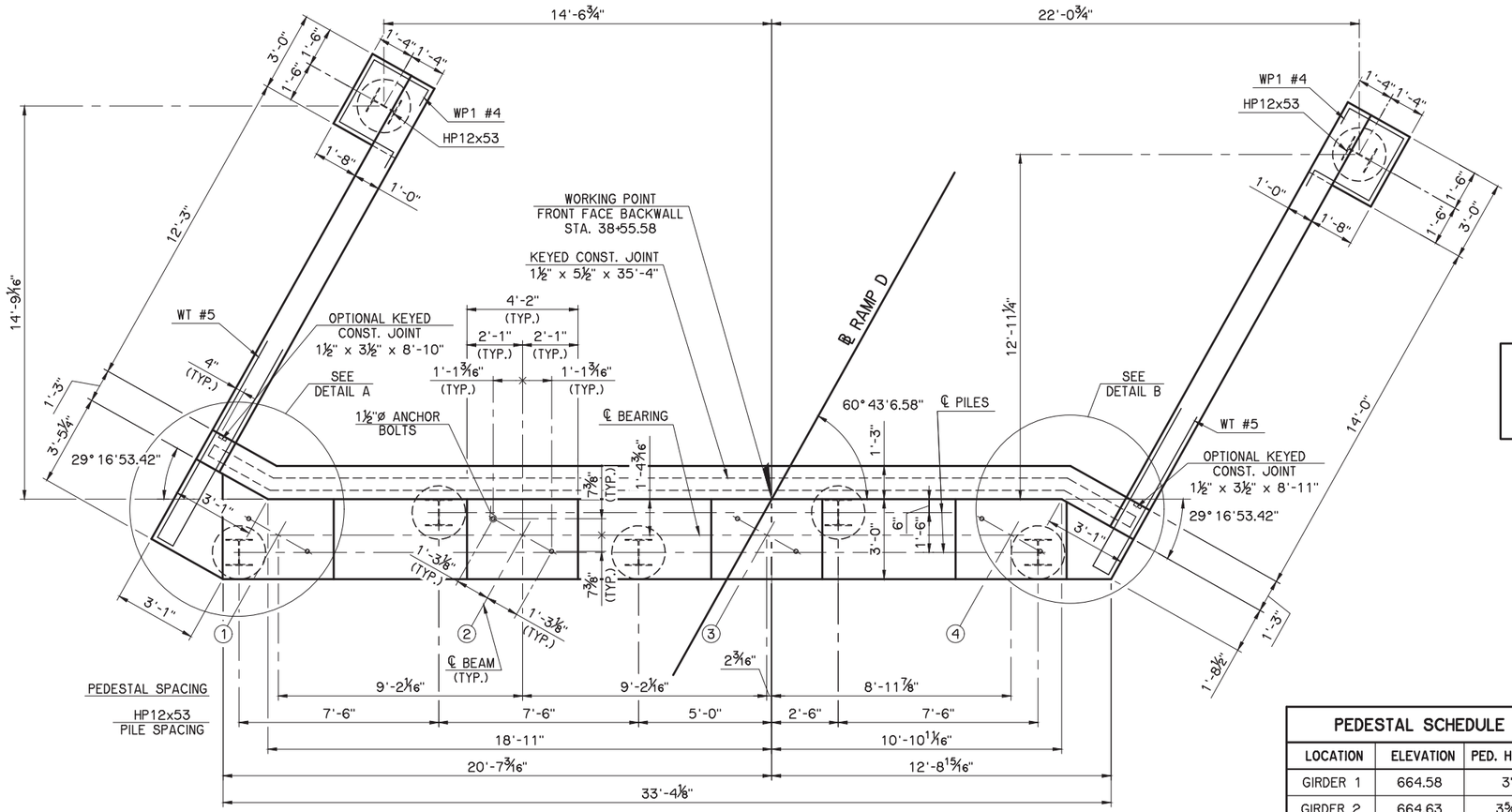

PLAN

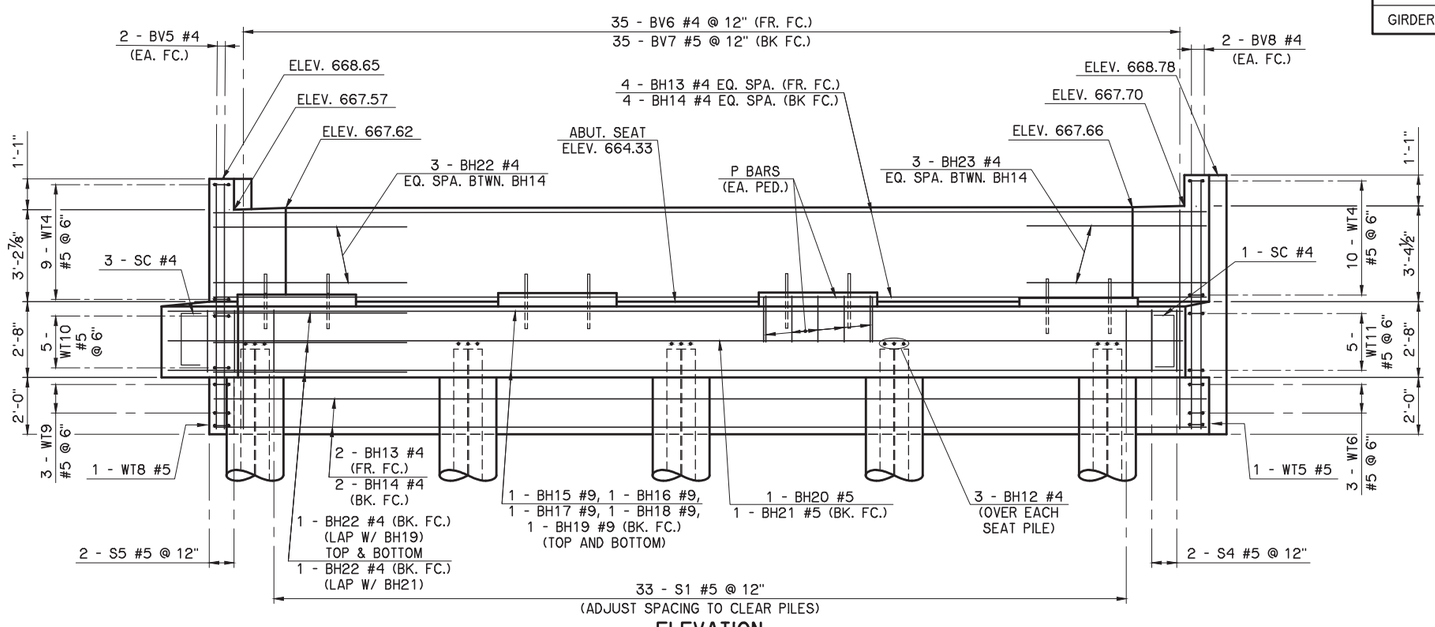

ELEVATION

NOTES:

FOR TYPICAL SECTION THRU SEAT, SEE SHEET B012.

FOR WING ELEVATIONS, SEE SHEET B014.

FOR DETAILS A & B AND SURFACE TREATMENT DETAILS, SEE SHEET B015.

FOR BAR LIST AND BAR BENDS, SEE SHEET B016.

FOR ANCHOR BOLT DETAILS, SEE SHEET B038.

ALL WT WING REINFORCING TIED TO ABUTMENT SEAT AND BACKWALL REINFORCING MUST BE IN PLACE PRIOR TO PLACING ABUTMENT SEAT AND BACKWALL CONCRETE.

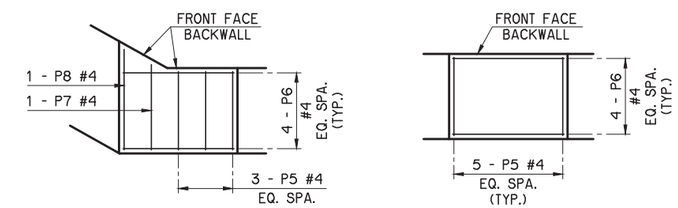

PEDESTAL REINFORCING

PEDESTAL SCHEDULE		
LOCATION	ELEVATION	PED. HEIGHT
GIRDER 1	664.58	3"
GIRDER 2	664.63	3⅝"
GIRDER 3	664.65	3⅞"
GIRDER 4	664.63	3⅝"

ABUTMENT QUANTITIES				
ITEM DESCRIPTION	UNIT	ABUT. NO. 1	ABUT. NO. 2	TOTAL
SUBSTRUCTURE EXCAVATION COMMON	C.Y.	115	75	190
CLSM BACKFILL	C.Y.	75.1	86.2	161.3
ELASTOMERIC COATING	S.F.	187.3	160.5	347.8
CLASS A CONCRETE	C.Y.	34.4	32.7	67.1
EPOXY COATED REINFORCING STEEL	LB.	4,570	4,480	9,050
PILES, FURNISHED (HP 12x53)	L.F.	205	280	485
PILES, DRIVEN (HP 12x53)	L.F.	205	280	485
PILE SPLICE, H-PILE (NON-BIDDABLE)	EA.			1
WATER REPELLENT (VISUALLY INSPECTED)	S.Y.	20	19	39
6" PERFORATED PIPE UNDERDRAIN ROUND	L.F.	39	34	73
6" NON-PERF. PIPE UNDERDRAIN RND.	L.F.	30	30	60

NOTE: ABUTMENTS CONSTRUCTED IN PHASE 3.

I-44 E.B. TO U.S.169 N.B. RAMP D — TULSA COUNTY

ABUTMENT DETAILS
SHEET 2 OF 6
ABUTMENT NO. 2

Design	AFW	
Detail	DRB	
Check	ADT	

WHITE ENGINEERING ASSOCIATES

STATE OF OKLAHOMA — DEPARTMENT OF TRANSPORTATION

JOB PIECE NO. 10981(05) — SHEET NO. B013

I:\Active\1611\Drawings\B013 Abut 2.dwg, 11/2/2020 1:13:06 PM, Deanne

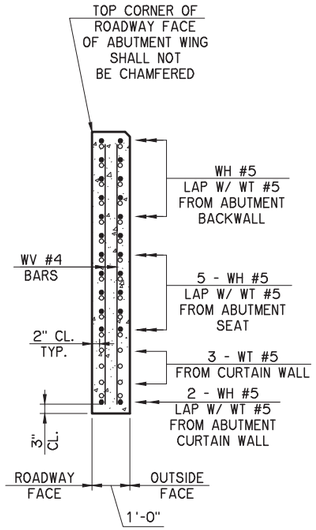

SECTION THRU WING AT BACK FACE OF ABUTMENT SEAT

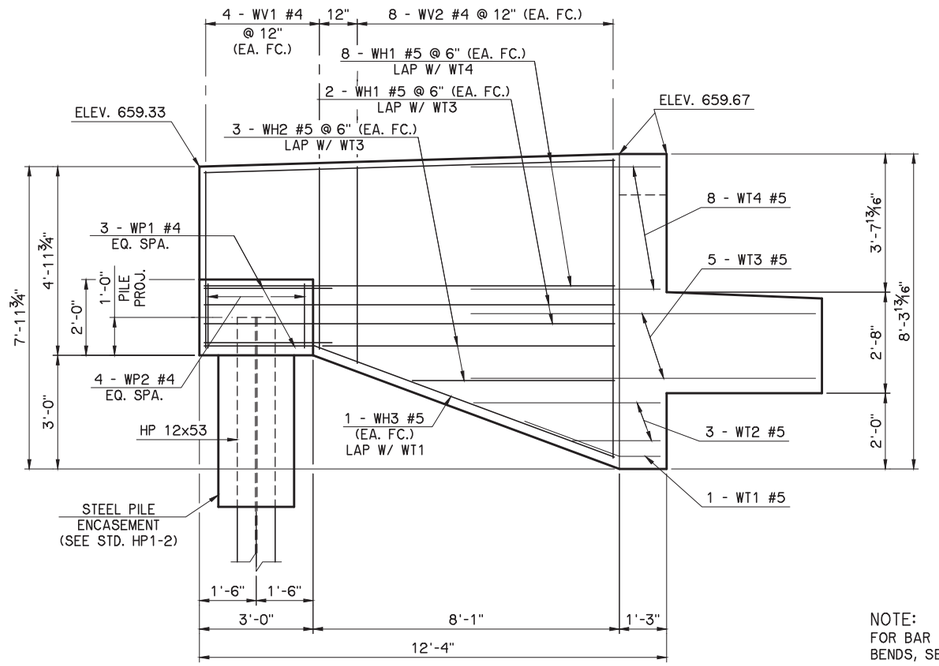

EAST WING ELEVATION
ABUTMENT NO. 1

NOTE:
FOR BAR LIST AND BAR BENDS, SEE SHEET B016.

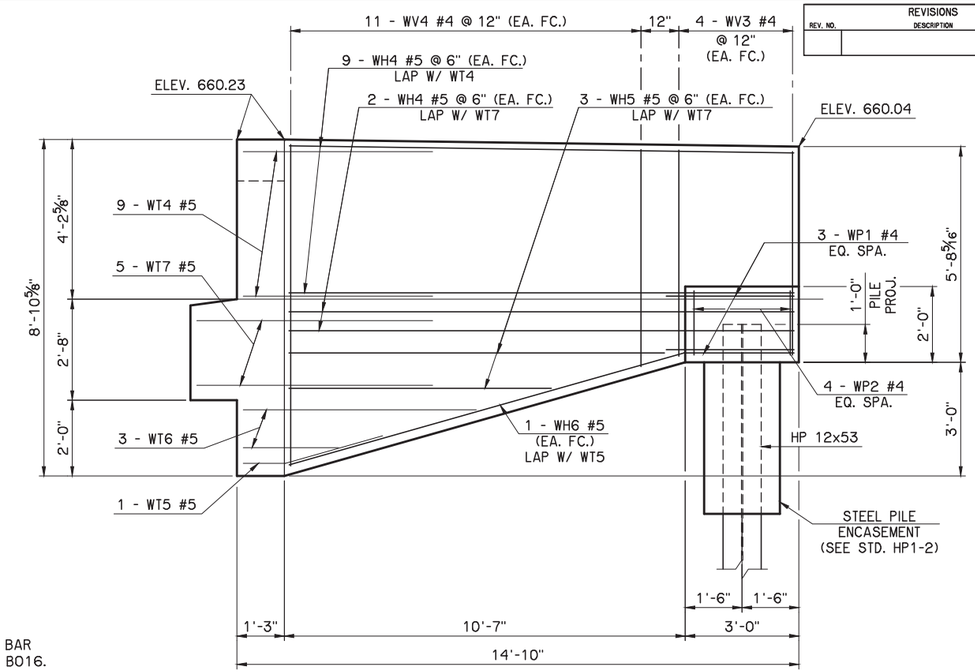

WEST WING ELEVATION
ABUTMENT NO. 1

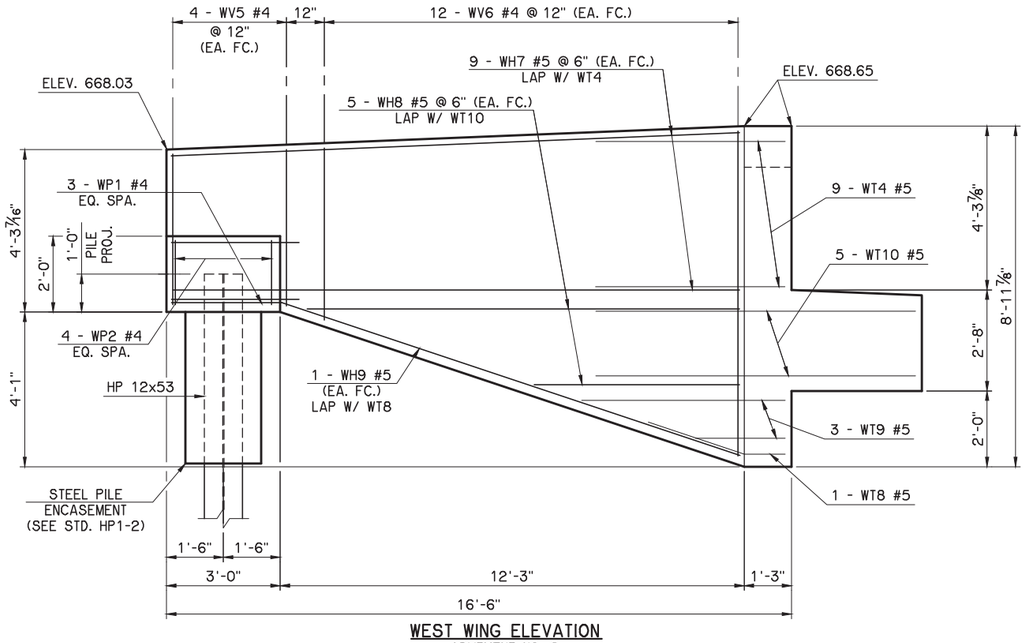

WEST WING ELEVATION
ABUTMENT NO. 2

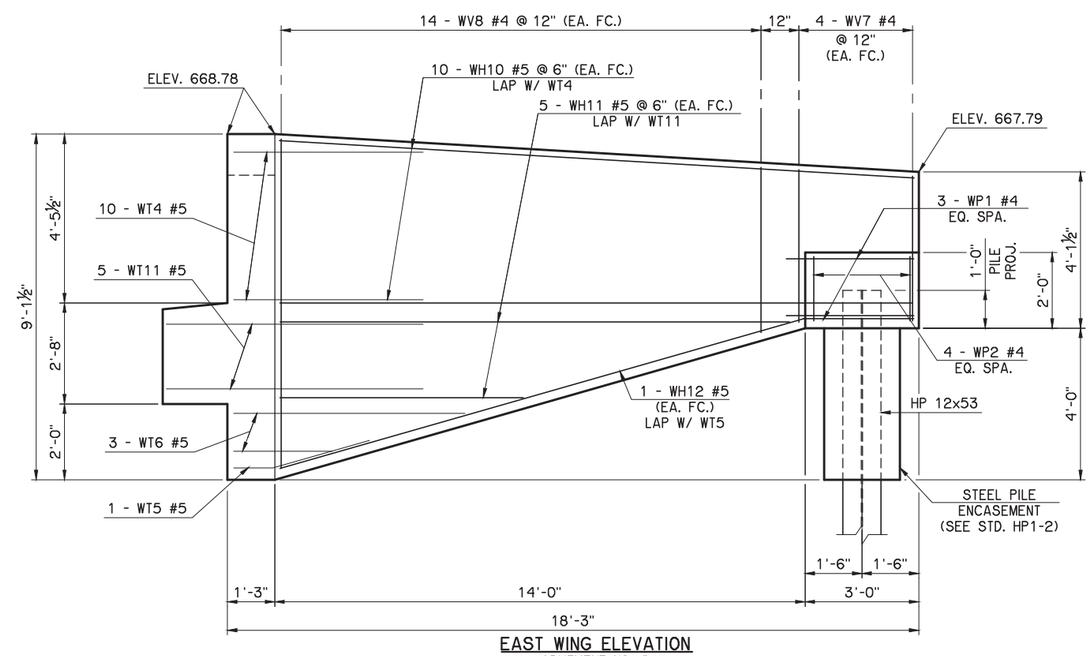

EAST WING ELEVATION
ABUTMENT NO. 2

WING ELEVATIONS

REVISIONS		
REV. NO.	DESCRIPTION	DATE

I-44 E.B. TO U.S.169 N.B. RAMP D — TULSA COUNTY

ABUTMENT DETAILS
SHEET 3 OF 6
ABUTMENT WINGS

Design	AFW	
Detail	DRB	
Check	ADT	

WHITE ENGINEERING ASSOCIATES

STATE OF OKLAHOMA — DEPARTMENT OF TRANSPORTATION

JOB PIECE NO. 10981(05) — SHEET NO. B014

I:\Active\16111\Drawings\B014 Abut wings.dwg, 11/2/2020 1:13:28 PM, Deanne

REVISIONS		
REV. NO.	DESCRIPTION	DATE

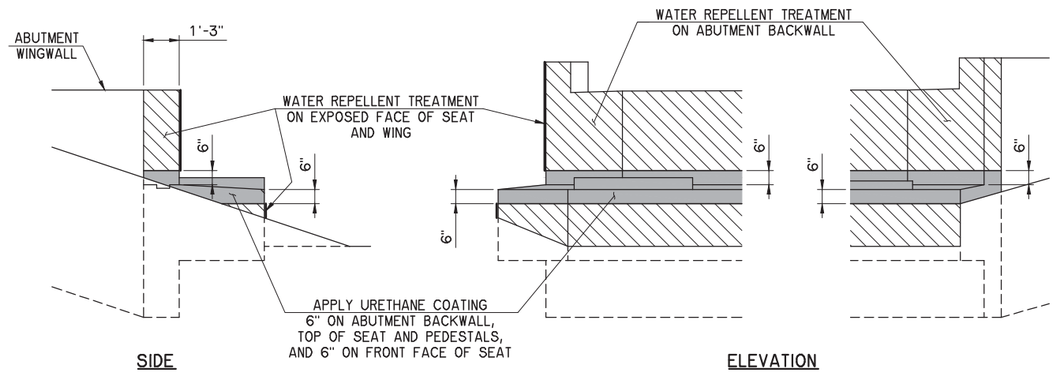

SURFACE TREATMENT DETAILS

MASK OFF BEARING PAD LOCATIONS PREVENTING URETHANE COATING FROM BEING APPLIED UNDER BEARING PAD. APPLY URETHANE COATING BEFORE OTHER SURFACE TREATMENTS.

NOTE:
INCLUDE COSTS ASSOCIATED WITH URETHANE COATING IN THE CONTRACT UNIT PRICE OF "ELASTOMERIC COATING".

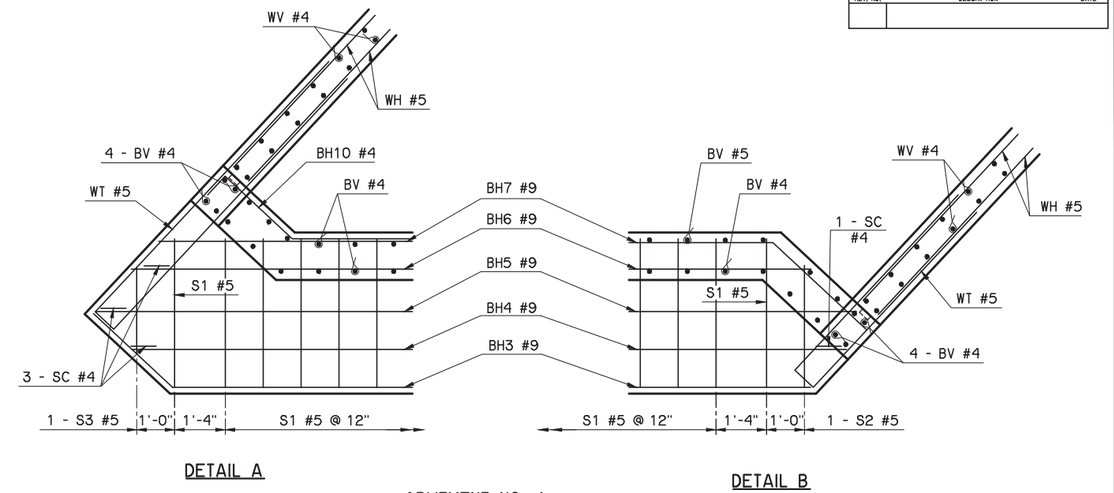

ABUTMENT NO. 1

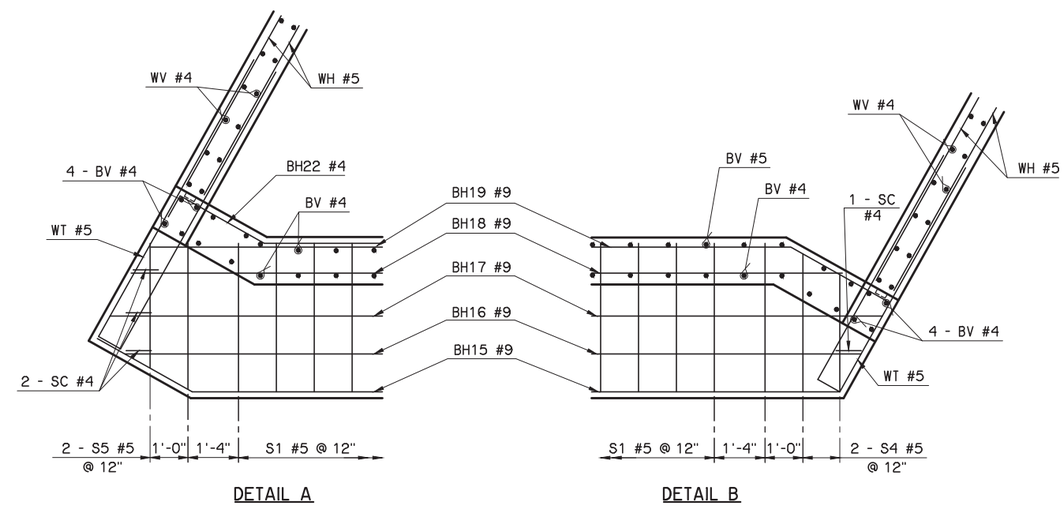

ABUTMENT NO. 2

ADDITIONAL SEAT REINFORCING DETAIL

I-44 E.B. TO U.S.169 N.B. RAMP D	TULSA COUNTY	Design	AFW
ABUTMENT DETAILS SHEET 4 OF 6 ABUTMENT DETAILS		Detail	DRB
		Check	ADT
		WHITE ENGINEERING ASSOCIATES	
STATE OF OKLAHOMA	DEPARTMENT OF TRANSPORTATION		
	JOB PIECE NO. 10981(05)	SHEET NO. B015	

I:\Active\16111\Drawings\B015 Abut details.dwg, 11/2/2020 1:13:50 PM, Deanne

REVISIONS		
REV. NO.	DESCRIPTION	DATE

ABUTMENT NO. 1 BAR LIST

	MARK	SIZE	NO.	FORM	LENGTH	LENGTH VARIATION
	EPOXY COATED REINFORCING					
	BH1	#4	6	BNT.	41'-4"	
	BH2	#4	6	BNT.	42'-8"	
	BH3	#9	2	BNT.	42'-6"	
	BH4	#9	2	STR.	41'-7"	
	BH5	#9	2	STR.	42'-9"	
	BH6	#9	2	STR.	40'-9"	
	BH7	#9	2	BNT.	42'-4"	
	BH8	#5	1	BNT.	42'-6"	
	BH9	#5	1	BNT.	42'-4"	
	BH10	#4	6	BNT.	7'-2"	
	BH11	#4	3	BNT.	8'-0"	
	BH12	#4	15	BNT.	5'-1"	
	BV1	#4	4	STR.	7'-11"	
	BV2	#4	41	STR.	7'-1" AVG.	6'-10" TO 7'-4"
	BV3	#5	41	STR.	7'-1" AVG.	6'-10" TO 7'-4"
	BV4	#4	4	STR.	8'-5"	
	PH	#4	1	BNT.	12'-5"	
	P1	#4	18	BNT.	6'-3"	
	P2	#4	16	BNT.	6'-9"	
	P3	#4	1	BNT.	6'-10"	
	P4	#4	1	BNT.	7'-6"	
	SC	#4	4	BNT.	3'-3"	
	S1	#5	38	BNT.	12'-11"	
	S2	#5	1	BNT.	11'-7"	
	S3	#5	1	BNT.	9'-7"	
	WH1	#5	20	STR.	10'-9"	
1	WH2	#5	6	STR.	6'-6" AVG.	5'-3" TO 7'-9"
	WH3	#5	2	BNT.	11'-3"	
	WH4	#5	22	STR.	13'-3"	
1	WH5	#5	6	STR.	8'-5" AVG.	6'-8" TO 10'-2"
	WH6	#5	2	BNT.	13'-7"	
	WT1	#5	1	BNT.	8'-2"	
	WT2	#5	3	BNT.	7'-10" AVG.	5'-0" TO 10'-8"
	WT3	#5	5	BNT.	18'-10"	
	WT4	#5	17	BNT.	10'-8"	
	WT5	#5	1	BNT.	8'-2"	
	WT6	#5	3	BNT.	9'-4" AVG.	5'-10" TO 12'-10"
	WT7	#5	5	BNT.	13'-2"	
	WP1	#4	6	BNT.	8'-8"	
	WP2	#4	8	STR.	1'-7"	
2	WV1	#4	8	STR.	4'-8" AVG.	4'-7" TO 4'-9"
3	WV2	#4	16	STR.	6'-6" AVG.	5'-2" TO 7'-10"
2	WV3	#4	8	STR.	5'-3"	
4	WV4	#4	22	STR.	7'-0" AVG.	5'-7" TO 8'-5"

1 2 SETS OF 3
2 2 SETS OF 4
3 2 SETS OF 8
4 2 SETS OF 11

ABUTMENT NO. 2 BAR LIST

	MARK	SIZE	NO.	FORM	LENGTH	LENGTH VARIATION
	EPOXY COATED REINFORCING					
	BH12	#4	15	BNT.	5'-1"	
	BH13	#4	6	BNT.	35'-8"	
	BH14	#4	6	BNT.	36'-11"	
	BH15	#9	2	BNT.	36'-0"	
	BH16	#9	2	STR.	35'-6"	
	BH17	#9	2	STR.	36-6"	34'-10" TO 35'-4"
	BH18	#9	2	STR.	35'-0"	
	BH19	#9	2	BNT.	36'-0"	
	BH20	#5	1	BNT.	36'-0"	
	BH21	#5	1	BNT.	36'-0"	
	BH22	#4	6	BNT.	7'-3"	
	BH23	#4	3	BNT.	7'-10"	
	BV5	#4	4	STR.	8'-7"	
	BV6	#4	35	STR.	7'-6" AVG.	7'-5" TO 7'-7"
	BV7	#5	35	STR.	7'-6" AVG.	7'-5" TO 7'-7"
	BV8	#4	4	STR.	8'-8"	
	P5	#4	18	BNT.	5'-10"	
	P6	#4	16	BNT.	7'-0"	
	P7	#4	1	BNT.	6'-1"	
	P8	#4	1	BNT.	6'-7"	
	SC	#4	4	BNT.	3'-3"	
	S1	#5	33	BNT.	12'-11"	
	S4	#5	2	BNT.	11'-9" AVG.	11'-3" TO 12'-3"
	S5	#5	2	BNT.	12'-1" AVG.	11'-5" TO 12'-9"
	WH7	#5	18	STR.	14'-11"	
5	WH8	#5	10	STR.	8'-7" AVG.	5'-7" TO 11'-7"
	WH9	#5	2	BNT.	15'-6"	
	WH10	#5	20	STR.	16'-8"	
5	WH11	#5	10	STR.	10'-1" AVG.	6'-7" TO 13'-7"
	WH12	#5	2	BNT.	17'-2"	
	WT4	#5	19	BNT.	10'-8"	
	WT5	#5	1	BNT.	8'-2"	
	WT6	#5	3	BNT.	9'-4" AVG.	5'-10" TO 12'-10"
	WT8	#5	1	BNT.	8'-2"	
	WT9	#5	3	BNT.	8'-4" AVG.	5'-4" TO 11'-4"
	WT10	#5	5	BNT.	17'-6"	
	WT11	#5	5	BNT.	14'-2"	
	WP1	#4	6	BNT.	8'-8"	
	WP2	#4	8	STR.	1'-7"	
2	WV5	#4	8	STR.	3'-11" AVG.	3'-10" TO 4'-0"
6	WV6	#4	24	STR.	6'-5" AVG.	4'-4" TO 8'-6"
2	WV7	#4	8	STR.	3'-10" AVG.	3'-9" TO 3'-11"
7	WV8	#4	28	STR.	6'-5" AVG.	4'-3" TO 8'-7"

5 2 SETS OF 5
6 2 SETS OF 12
7 2 SETS OF 14

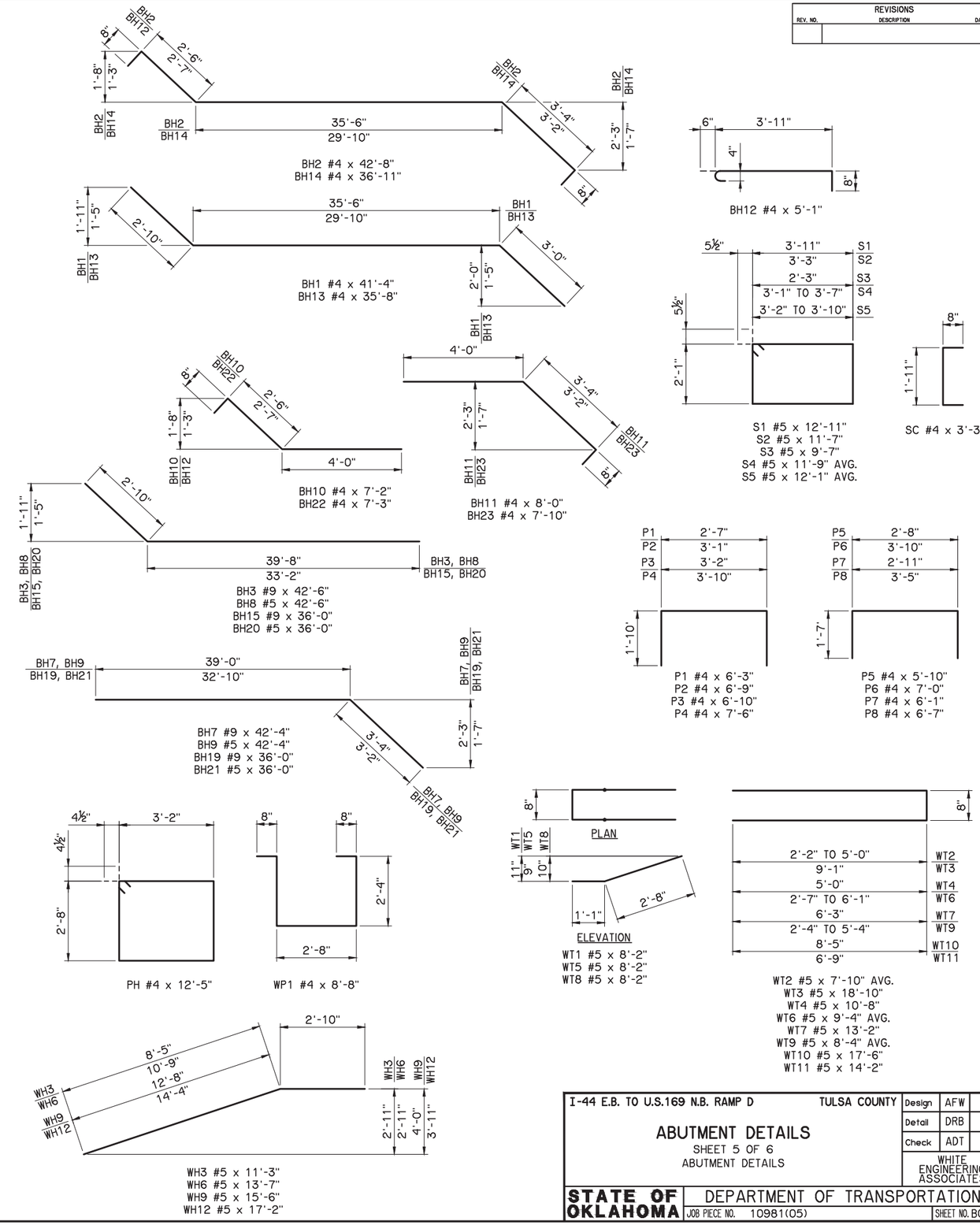

I-44 E.B. TO U.S.169 N.B. RAMP D — TULSA COUNTY	Design	AFW	
ABUTMENT DETAILS	Detail	DRB	
SHEET 5 OF 6	Check	ADT	
ABUTMENT DETAILS	WHITE ENGINEERING ASSOCIATES		
STATE OF OKLAHOMA — DEPARTMENT OF TRANSPORTATION			
JOB PIECE NO. 10981(05)	SHEET NO. B016		

I:\Active\16111\Drawings\B016 Abut bars.dwg, 11/2/2020 1:14:11 PM, Deanne

REVISIONS		
REV. NO.	DESCRIPTION	DATE

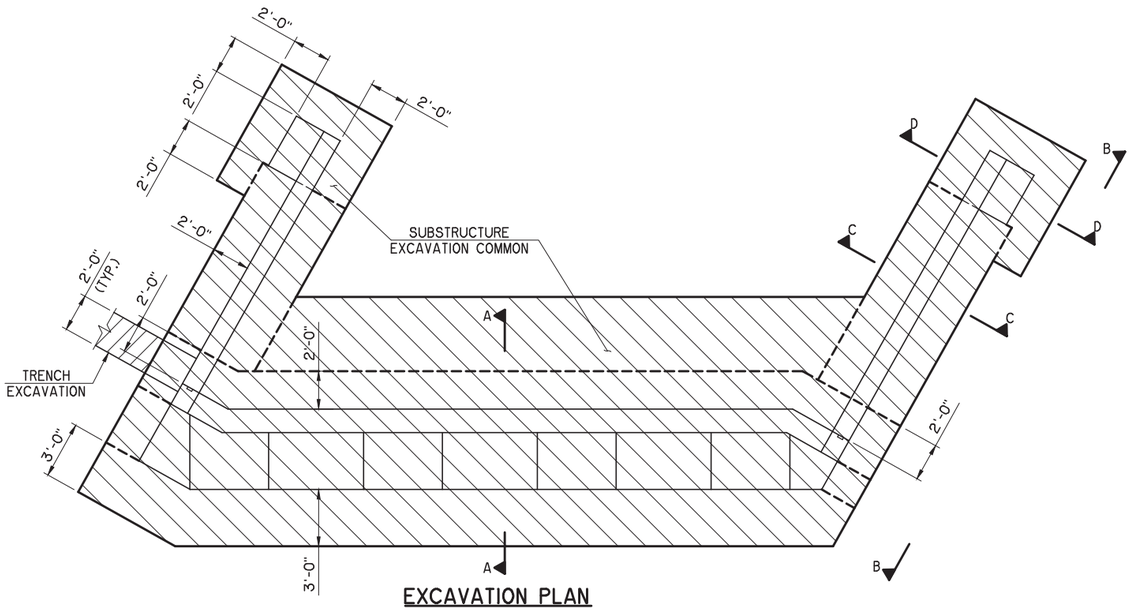

EXCAVATION PLAN

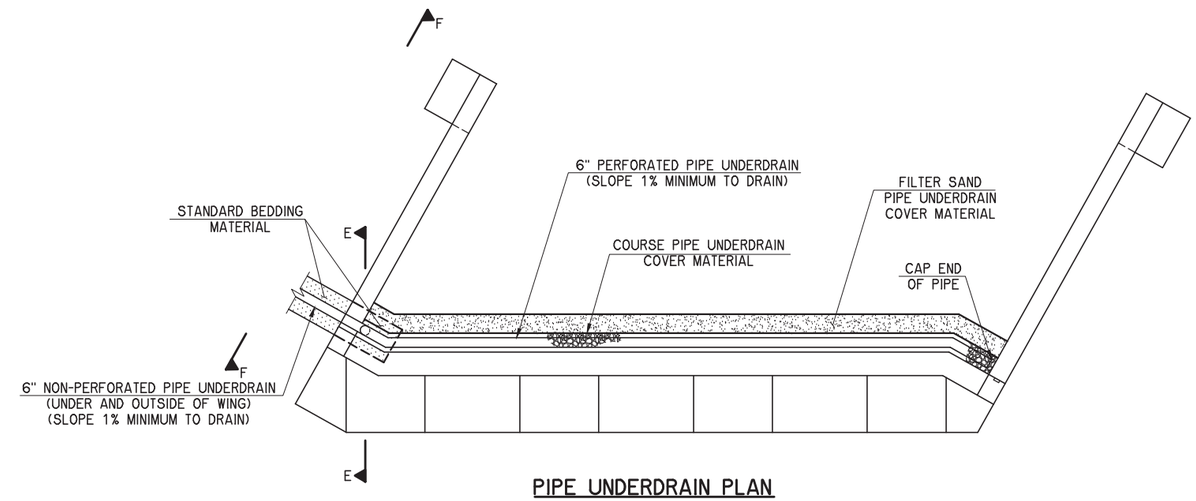

PIPE UNDERDRAIN PLAN

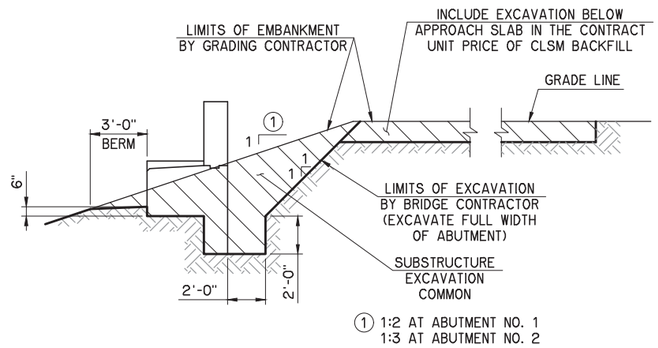

① 1:2 AT ABUTMENT NO. 1
1:3 AT ABUTMENT NO. 2

SECTION A-A

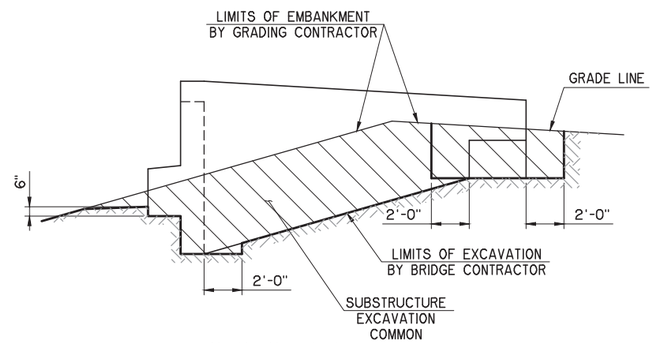

SECTION B-B

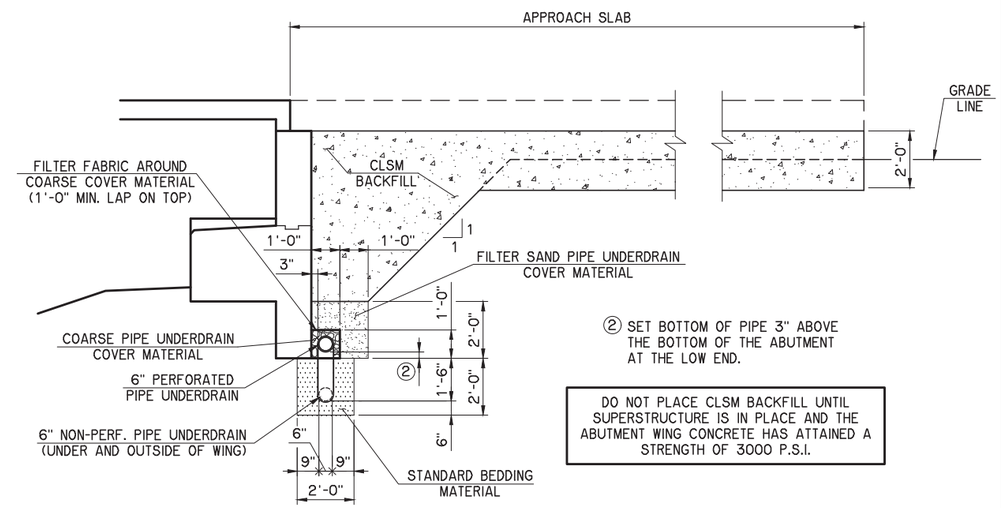

② SET BOTTOM OF PIPE 3" ABOVE THE BOTTOM OF THE ABUTMENT AT THE LOW END.

DO NOT PLACE CLSM BACKFILL UNTIL SUPERSTRUCTURE IS IN PLACE AND THE ABUTMENT WING CONCRETE HAS ATTAINED A STRENGTH OF 3000 P.S.I.

SECTION E-E

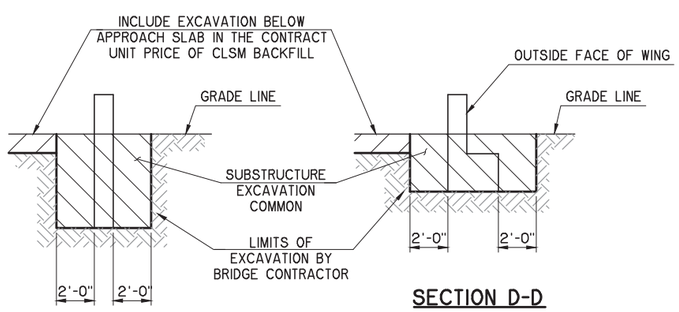

SECTION C-C

SECTION D-D

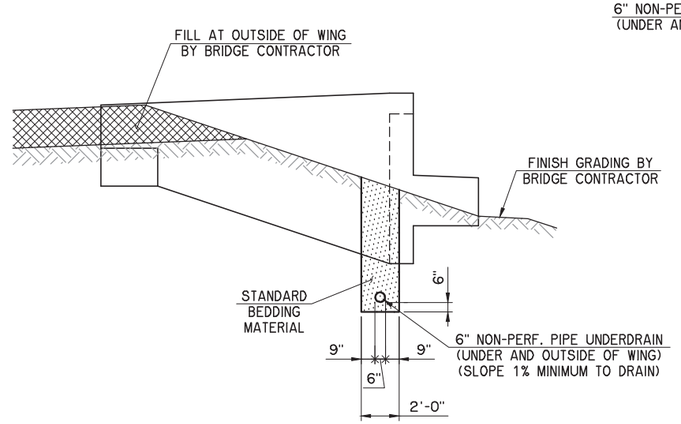

SECTION F-F

I-44 E.B. TO U.S.169 N.B. RAMP D — TULSA COUNTY

ABUTMENT DETAILS

SHEET 6 OF 6
ABUTMENT DETAILS

Design	AFW	
Detail	DRB	
Check	ADT	

WHITE ENGINEERING ASSOCIATES

STATE OF OKLAHOMA — DEPARTMENT OF TRANSPORTATION

JOB PIECE NO. 10981(05) — SHEET NO. B017

I:\Active\11611\Drawings\B017 Abut misc.dwg, 11/2/2020 1:14:31 PM, Deanne

REVISIONS		
REV. NO.	DESCRIPTION	DATE

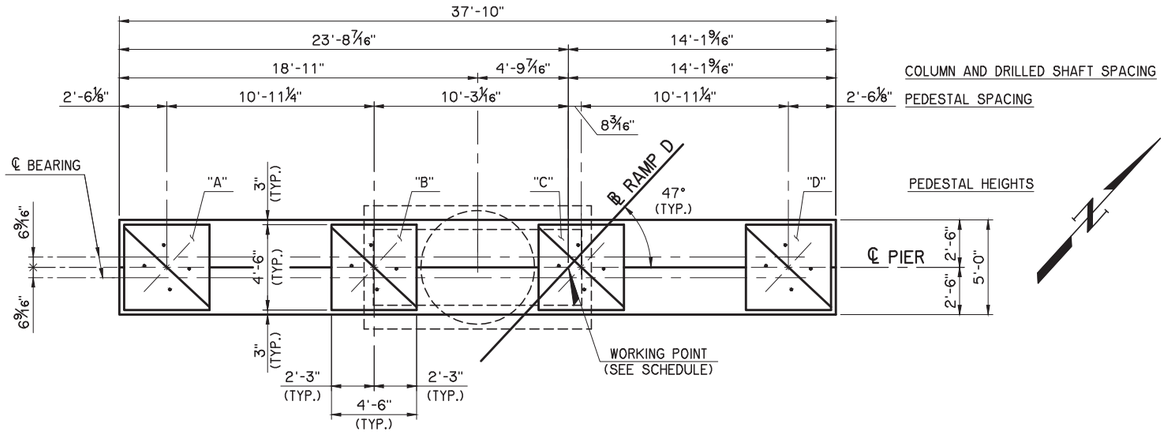

PLAN

PIER NO. 1 ONLY

PEDESTAL SCHEDULE – PIER 1			
LOCATION	DIMENSION	ELEVATION	STEP ELEVATION
"A"	3"	657.05	657.51
"B"	3¾"	657.11	657.57
"C"	4⅜"	657.17	657.62
"D"	5⅛"	657.23	657.69

NOTES:

FOR PIER NOS. 2 - 7 CAP PLAN, PEDESTAL DETAILS AND ANCHOR BOLT LAYOUT, SEE SHEET B019.

FOR SECTIONS A-A, B-B, C-C AND D-D, SURFACE TREATMENT DETAIL AND TYPICAL PIER EXCAVATION, SEE SHEET B023.

FOR BAR LIST AND QUANTITY BLOCK, SEE SHEET B024.

FOR BAR BENDS AND DRILLED SHAFT BAR LIST, SEE SHEET B025.

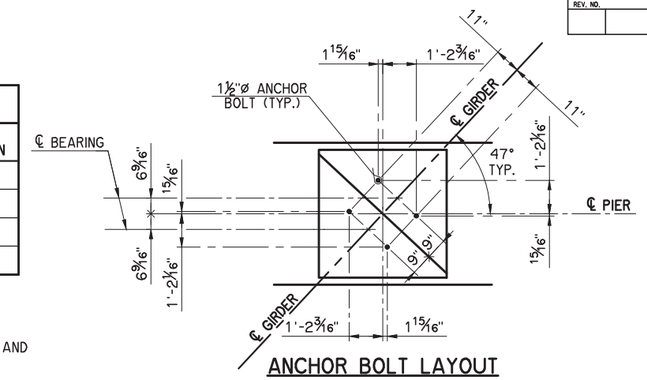

ANCHOR BOLT LAYOUT

PIER NO. 1 ONLY
FOR BOLT DETAILS, SEE SHEET B038

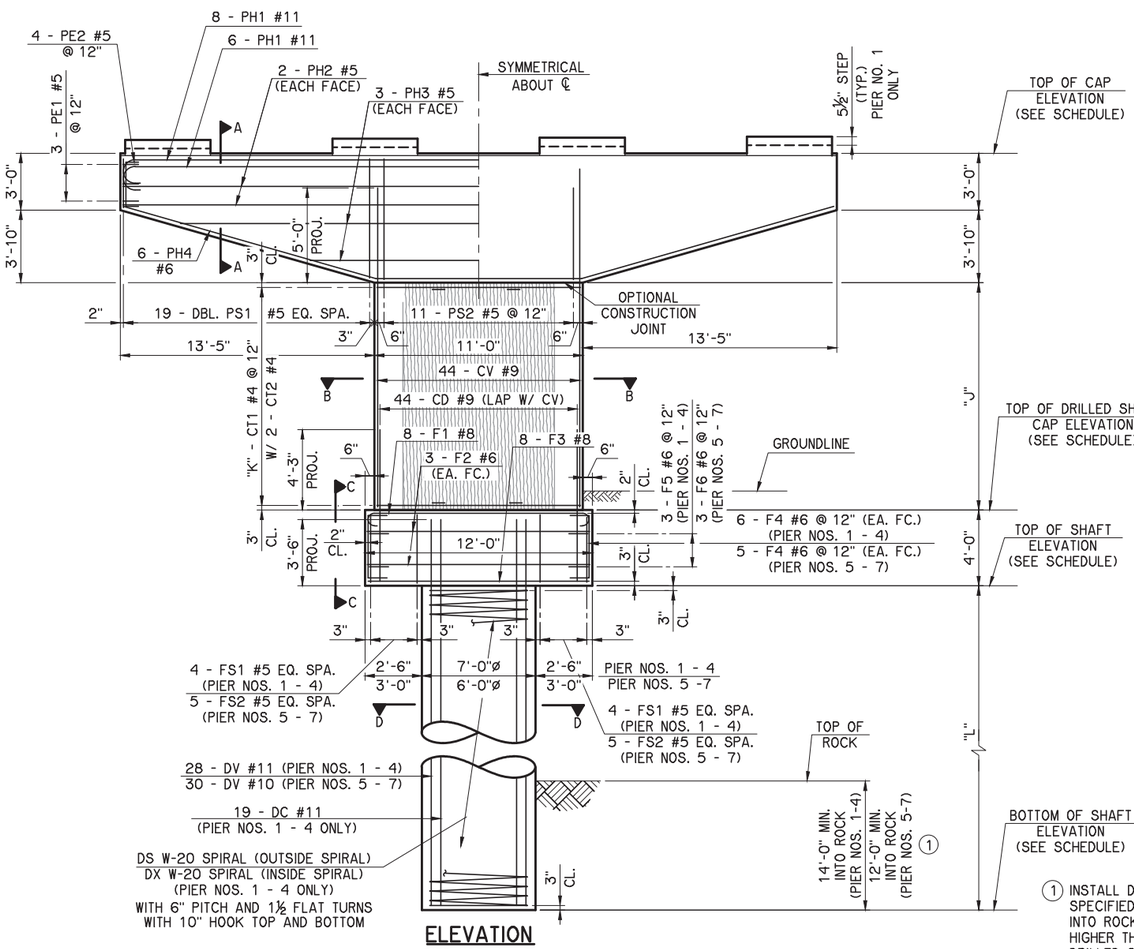

1 INSTALL DRILLED SHAFTS THE SPECIFIED MINIMUM DISTANCE INTO ROCK, BUT IN NO CASE HIGHER THAN THE BOTTOM OF DRILLED SHAFT ELEVATION SHOWN ON PLANS.

ELEVATION

PIER NOS. 1 - 7
(PIER NO. 1 SHOWN)

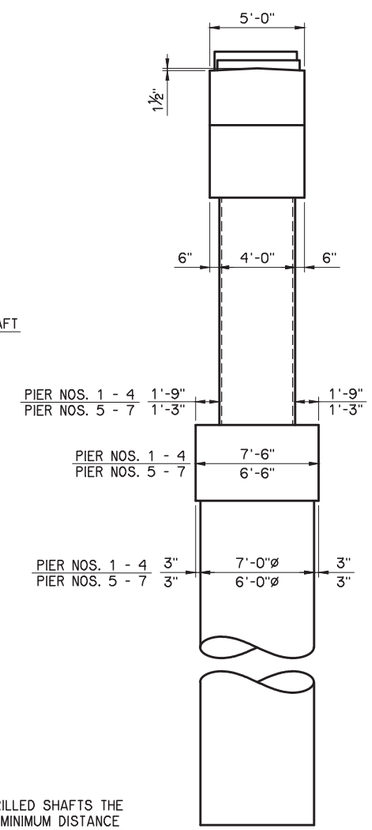

END VIEW

PIER NOS. 1 - 7
(PIER NO. 1 SHOWN)

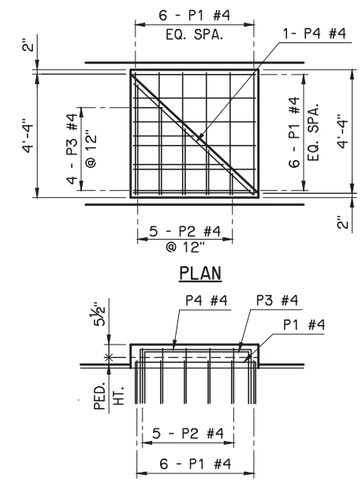

PEDESTAL REINFORCING

PIER NO. 1 ONLY
TYPICAL EACH PEDESTAL

PIER DIMENSIONS								
LOCATION	WORKING POINT STATION	TOP OF CAP ELEVATION	TOP OF D.S. CAP ELEVATION	TOP OF SHAFT ELEVATION	BOTTOM OF SHAFT ELEVATION	"J"	"K"	"L"
PIER NO. 1	30+12.44	656.80	637.47	633.47	616.47	12'-6"	13	17'-0"
PIER NO. 2	30+68.44	658.36	637.03	633.03	611.03	14'-6"	15	22'-0"
PIER NO. 3	31+46.44	660.60	637.77	633.77	612.77	16'-0"	17	21'-0"
PIER NO. 4	32+24.44	662.88	637.55	633.55	611.55	18'-6"	19	22'-0"
PIER NO. 5	33+12.44	665.41	641.08	637.08	615.08	17'-6"	18	22'-0"
PIER NO. 6	34+00.44	667.99	641.16	637.16	620.16	20'-0"	21	17'-0"
PIER NO. 7	34+88.44	670.04	645.21	641.21	615.21	18'-0"	19	26'-0"

I-44 E.B. TO U.S.169 N.B. RAMP D — TULSA COUNTY

PIER DETAILS

SHEET 1 OF 8
PIER NOS. 1 - 7

Design	AFW
Detail	DRB
Check	ADT

WHITE ENGINEERING ASSOCIATES

STATE OF OKLAHOMA — DEPARTMENT OF TRANSPORTATION

JOB PIECE NO. 10981(05) — SHEET NO. B018

I:\Active\16111\Drawings\B018 Pier 1-7.dwg, 11/2/2020 1:17:09 PM, Deanne

REVISIONS		
REV. NO.	DESCRIPTION	DATE

NOTES:
FOR PIER NOS. 2 - 7 ELEVATION, SEE SHEET B018.

FOR BAR LIST, BAR BENDS, QUANTITY BLOCK, SEE SHEETS B024 & B025.

PEDESTAL SCHEDULE								
LOCATION	"A"		"B"		"C"		"D"	
	DIM.	ELEVATION	DIM.	ELEVATION	DIM.	ELEVATION	DIM.	ELEVATION
PIER NO. 2	3"	658.61	3¾"	658.67	4⅜"	658.72	5⅛"	658.79
PIER NO. 3	3"	660.85	3¾"	660.91	4⅜"	660.97	5⅛"	661.03
PIER NO. 4	3"	663.13	3¾"	663.19	4⅜"	663.24	5⅛"	663.30
PIER NO. 5	3"	665.66	3¾"	665.72	4⅜"	665.78	5⅛"	665.84
PIER NO. 6	3"	668.24	3¾"	668.30	4⅜"	668.35	5⅛"	668.42
PIER NO. 7	3"	670.29	3⅛"	670.30	3⅞"	670.36	5¼"	670.47

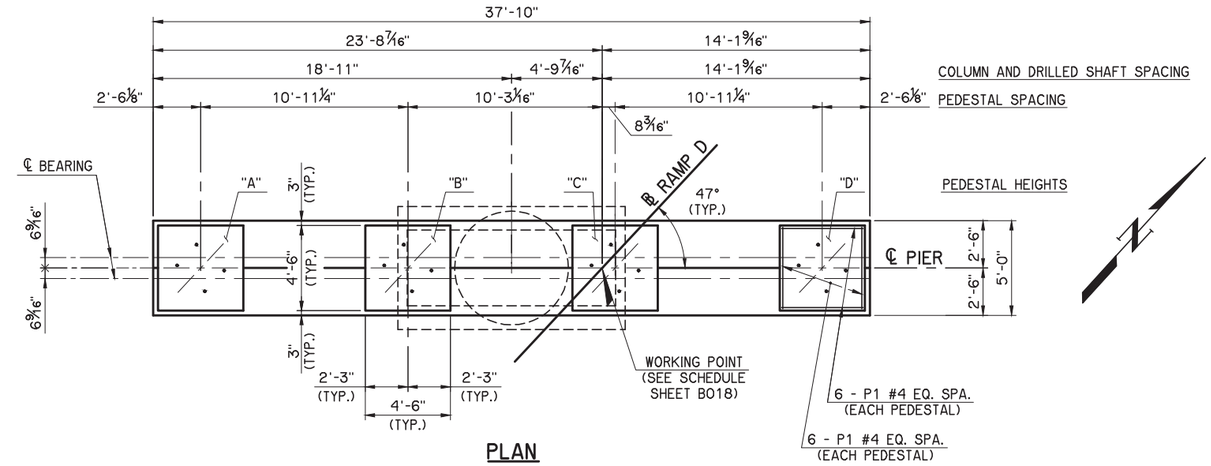

PLAN
PIER NOS. 2 - 7

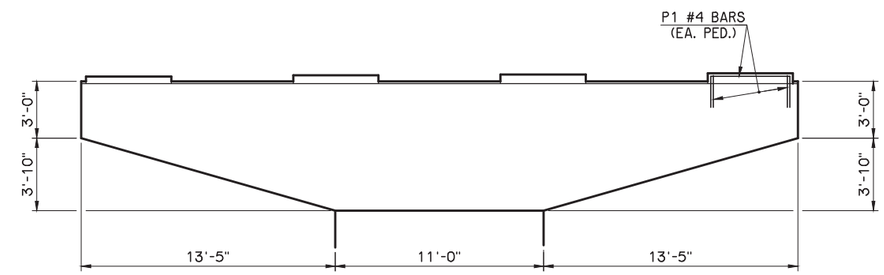

PEDESTAL ELEVATION
PIER NOS. 2 - 7

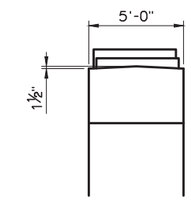

END VIEW

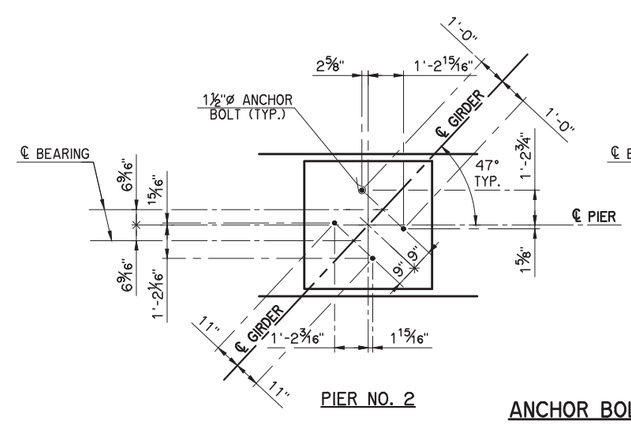

PIER NO. 2

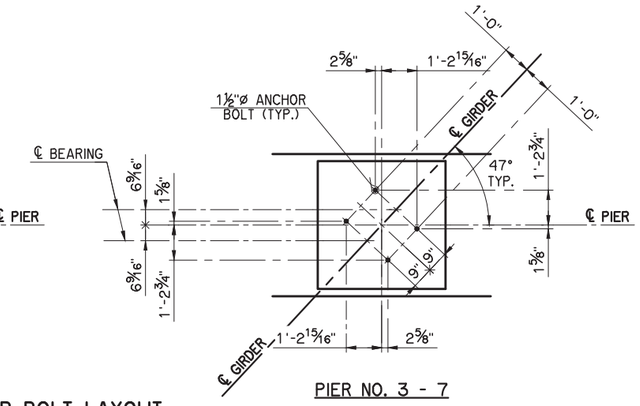

PIER NO. 3 - 7

ANCHOR BOLT LAYOUT
FOR BOLT DETAILS, SEE SHEET B038

I-44 E.B. TO U.S.169 N.B. RAMP D	TULSA COUNTY	Design	AFW
PIER DETAILS SHEET 2 OF 8 PIER NOS. 2 - 7		Detail	DRB
		Check	ADT
		WHITE ENGINEERING ASSOCIATES	
STATE OF OKLAHOMA	DEPARTMENT OF TRANSPORTATION		
	JOB PIECE NO. 10981(05)	SHEET NO. B019	

I:\Active\16111\Drawings\B019 Pier 2-7.dwg, 11/2/2020 1:17:34 PM, Deanne

REVISIONS		
REV. NO.	DESCRIPTION	DATE

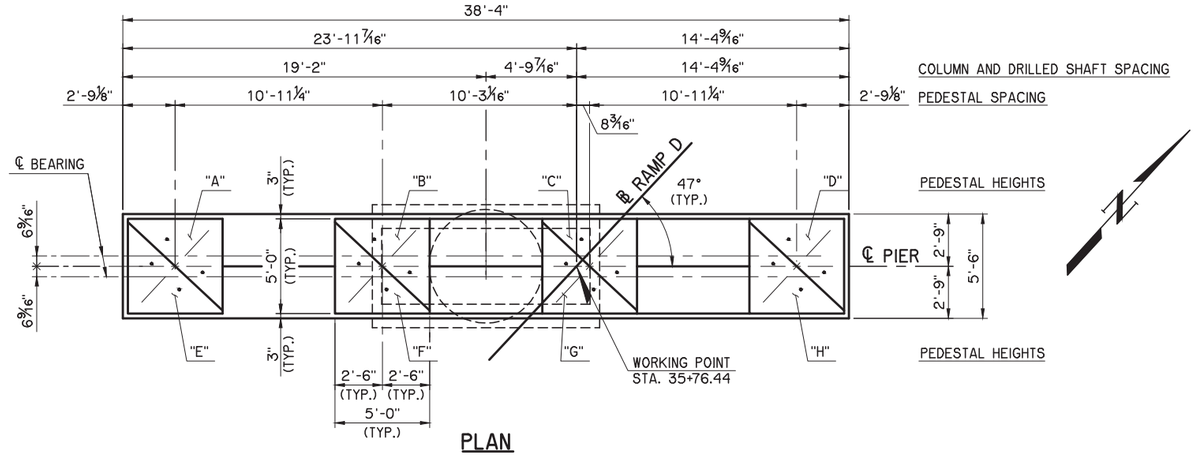

PLAN

PEDESTAL SCHEDULE		
LOCATION	DIM.	ELEVATION
"A"	3"	670.34
"B"	6"	670.59
"C"	6½"	670.88
"D"	7⅝"	671.22
"E"	5½"	670.55
"F"	8⅜"	670.79
"G"	8⅞"	671.08
"H"	9⅞"	671.41

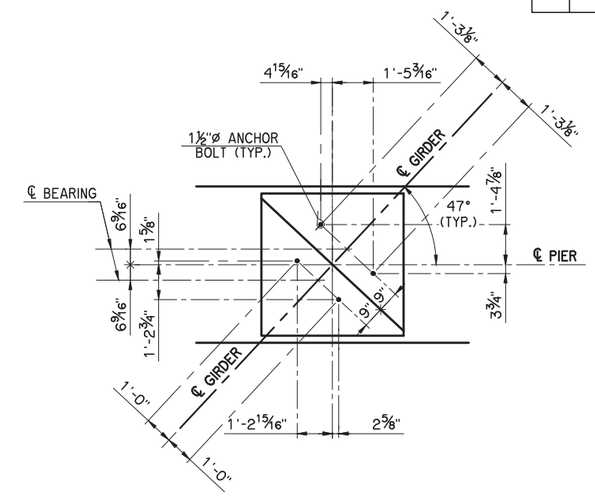

ANCHOR BOLT LAYOUT

FOR BOLT DETAILS, SEE SHEET B038

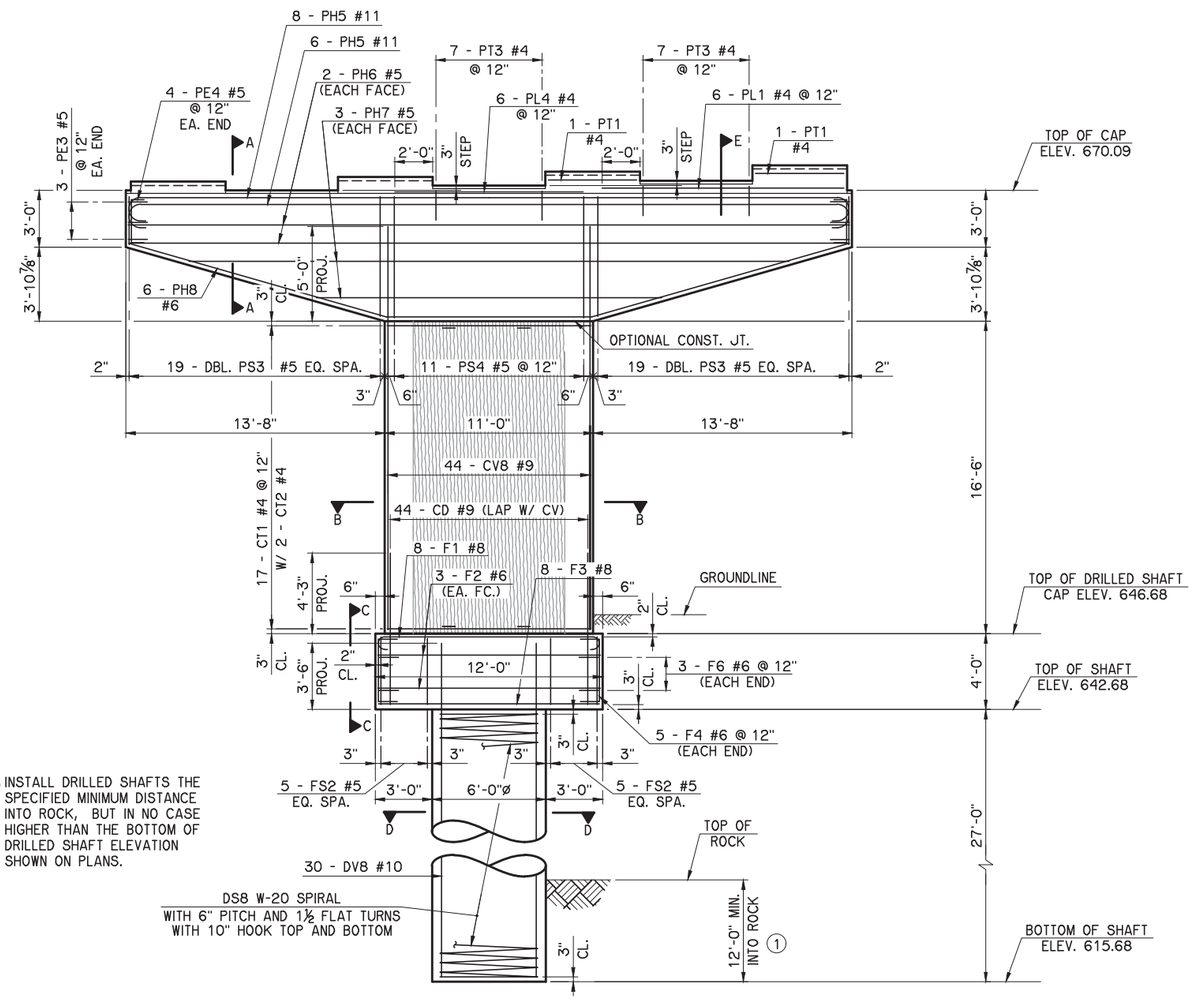

(1) INSTALL DRILLED SHAFTS THE SPECIFIED MINIMUM DISTANCE INTO ROCK, BUT IN NO CASE HIGHER THAN THE BOTTOM OF DRILLED SHAFT ELEVATION SHOWN ON PLANS.

ELEVATION

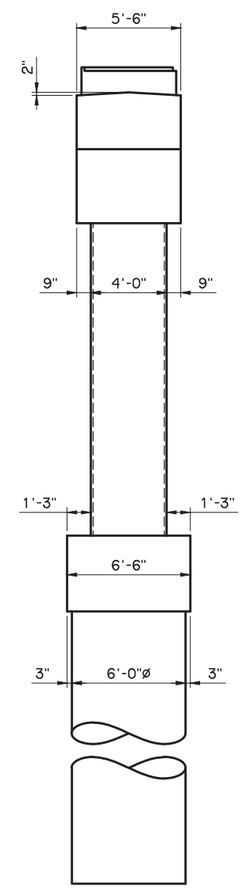

END VIEW

NOTES:

FOR SECTIONS A-A, B-B, C-C, D-D, E, AND SURFACE TREATMENT DETAIL, SEE SHEET B023.

FOR BAR LIST AND QUANTITY BLOCK, SEE SHEET B024.

FOR BAR BENDS AND DRILLED SHAFT BAR LIST, SEE SHEET B025.

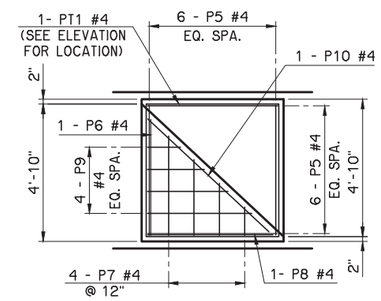

PLAN

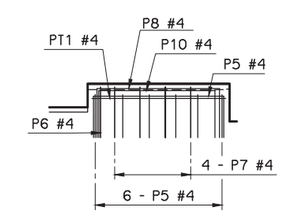

ELEVATION

PEDESTAL REINFORCING

TYPICAL EACH PEDESTAL

I-44 E.B. TO U.S.169 N.B. RAMP D	TULSA COUNTY	Design	AFW	
PIER DETAILS SHEET 3 OF 8 PIER NO. 8		Detail	DRB	
		Check	ADT	
		WHITE ENGINEERING ASSOCIATES		
STATE OF OKLAHOMA	DEPARTMENT OF TRANSPORTATION			
	JOB PIECE NO. 10981(05)	SHEET NO. B020		

I:\Active\16111\Drawings\B020 Pier 8.dwg, 11/2/2020 1:17:56 PM, Deanne

REVISIONS		
REV. NO.	DESCRIPTION	DATE

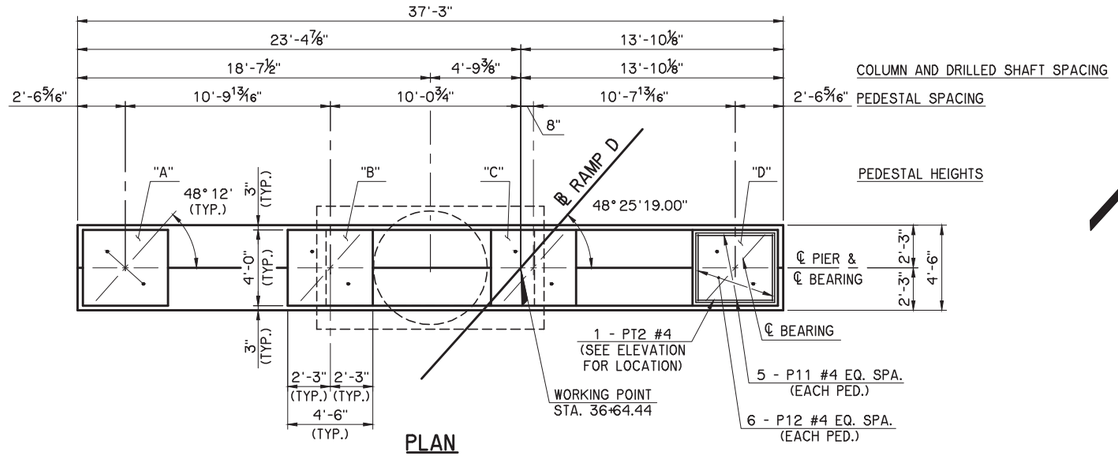

PLAN

PEDESTAL SCHEDULE		
LOCATION	DIM.	ELEVATION
"A"	3"	669.71
"B"	6⅞"	670.03
"C"	7⅝"	670.34
"D"	7⅜"	670.65

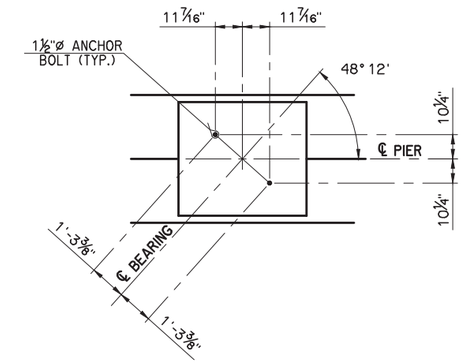

ANCHOR BOLT LAYOUT

FOR BOLT DETAILS, SEE SHEET B038

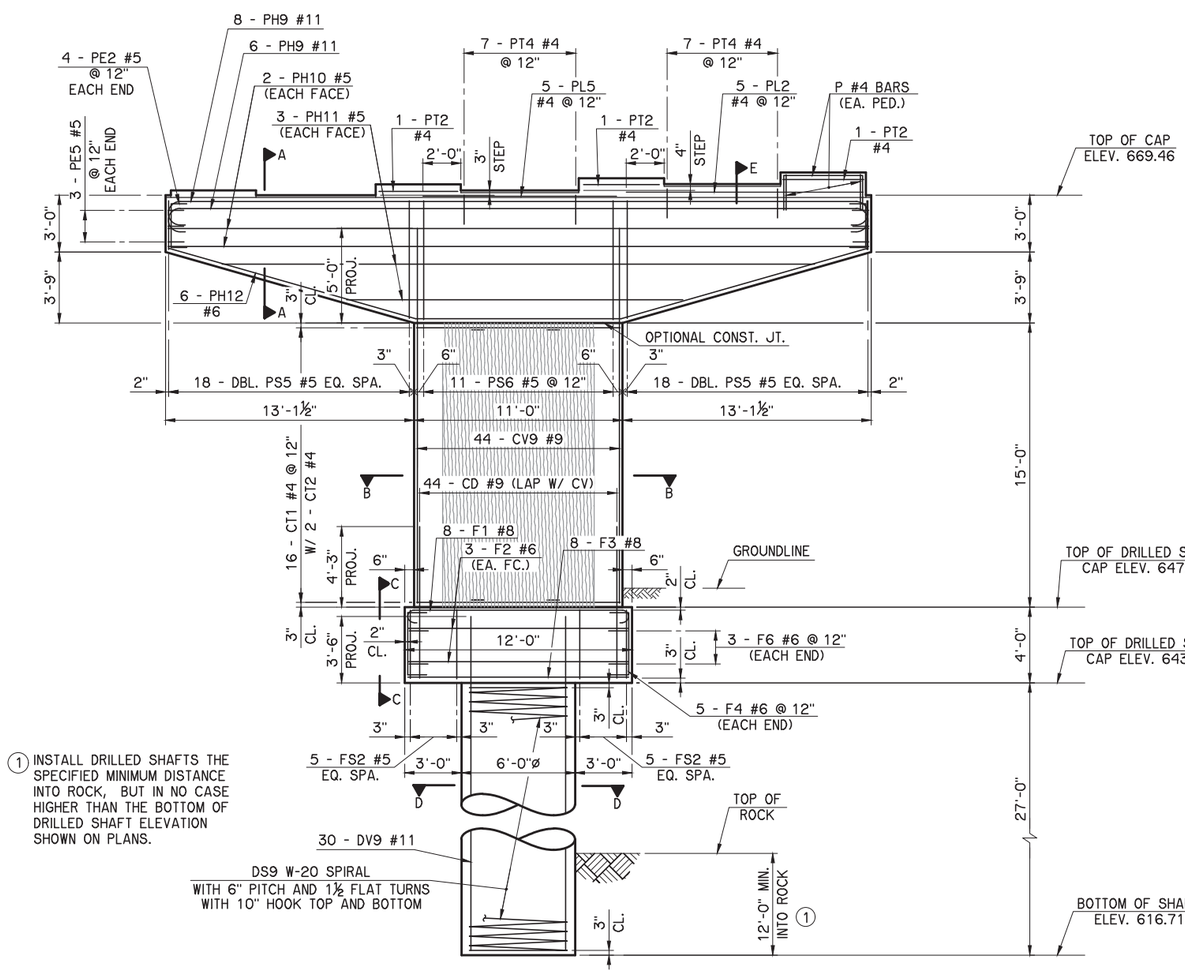

ELEVATION

1 INSTALL DRILLED SHAFTS THE SPECIFIED MINIMUM DISTANCE INTO ROCK, BUT IN NO CASE HIGHER THAN THE BOTTOM OF DRILLED SHAFT ELEVATION SHOWN ON PLANS.

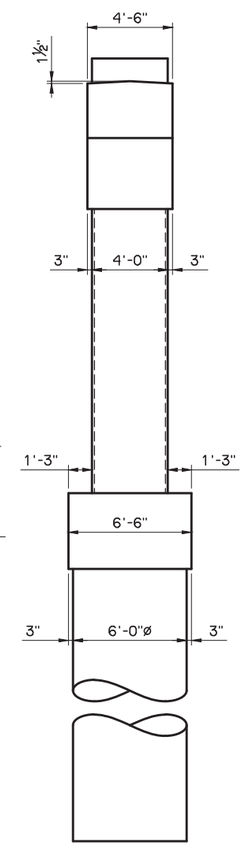

END VIEW

NOTES:

FOR SECTIONS A-A, B-B, C-C, D-D, E, AND SURFACE TREATMENT DETAIL, SEE SHEET B023.

FOR BAR LIST AND QUANTITY BLOCK, SEE SHEET B024.

FOR BAR BENDS AND DRILLED SHAFT BAR LIST, SEE SHEET B025.

I-44 E.B. TO U.S.169 N.B. RAMP D	TULSA COUNTY	Design	AFW	
PIER DETAILS SHEET 4 OF 8 PIER NO. 9		Detail	DRB	
		Check	ADT	
		WHITE ENGINEERING ASSOCIATES		
STATE OF OKLAHOMA	DEPARTMENT OF TRANSPORTATION			
	JOB PIECE NO. 10981(05)	SHEET NO. B021		

I:\Active\1611\Drawings\B021 Pier 9.dwg, 11/2/2020 1:18:18 PM, Deanne

REVISIONS		
REV. NO.	DESCRIPTION	DATE

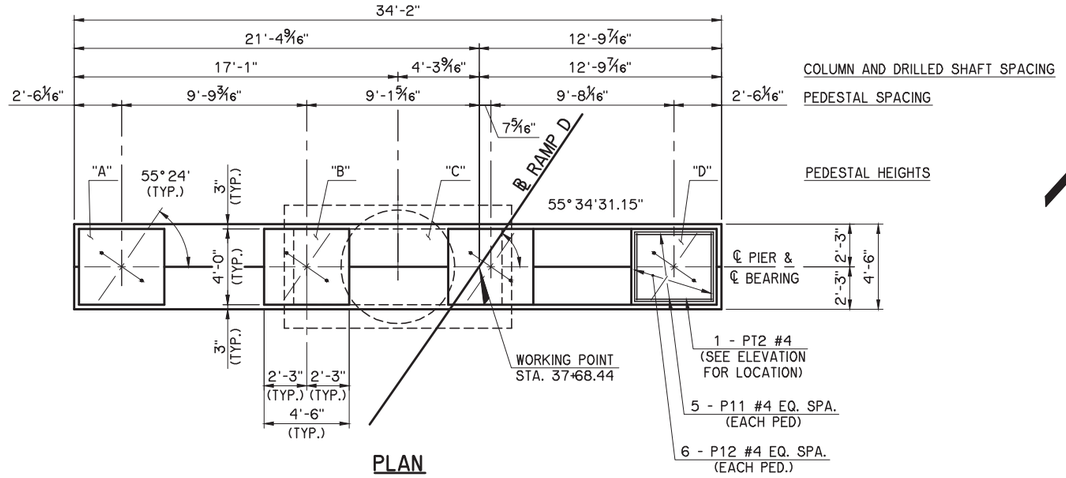

PLAN

PEDESTAL SCHEDULE		
LOCATION	DIM.	ELEVATION
"A"	3"	667.53
"B"	5 7/8"	667.77
"C"	8 3/4"	668.01
"D"	6 3/4"	668.26

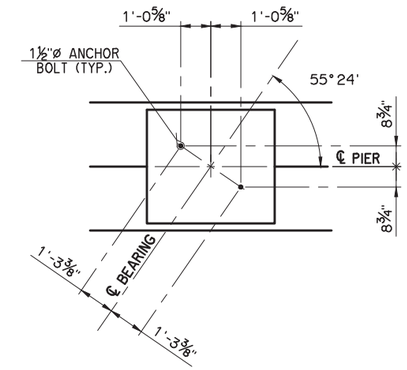

ANCHOR BOLT LAYOUT

FOR BOLT DETAILS, SEE SHEET B038

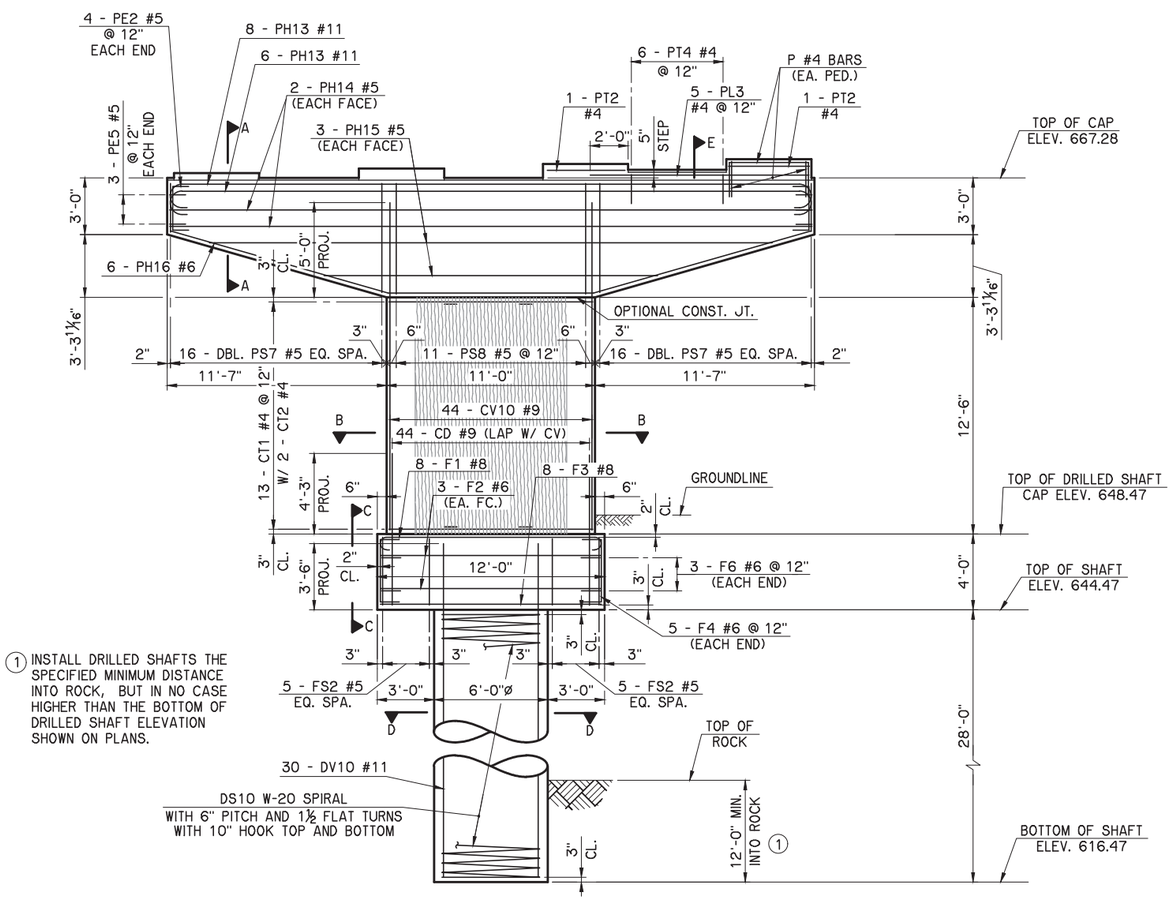

(1) INSTALL DRILLED SHAFTS THE SPECIFIED MINIMUM DISTANCE INTO ROCK, BUT IN NO CASE HIGHER THAN THE BOTTOM OF DRILLED SHAFT ELEVATION SHOWN ON PLANS.

ELEVATION

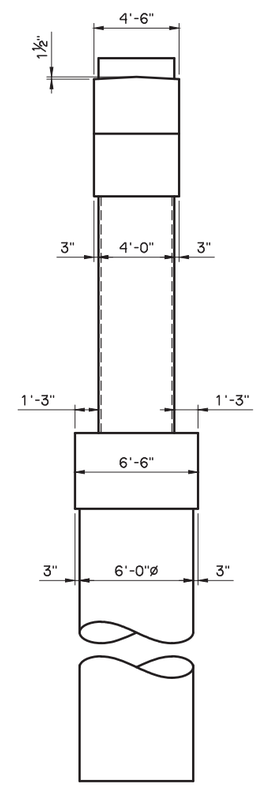

END VIEW

NOTES:

FOR SECTIONS A-A, B-B, C-C, D-D, E AND SURFACE TREATMENT DETAIL, SEE SHEET B023.

FOR QUANTITY BLOCK, SEE SHEET B024.

FOR BAR LIST, DRILLED SHAFT BAR LIST AND BAR BENDS, SEE SHEET B025.

I-44 E.B. TO U.S.169 N.B. RAMP D — TULSA COUNTY

PIER DETAILS

SHEET 5 OF 8

PIER NO. 10

Design	AFW	
Detail	DRB	
Check	ADT	

WHITE ENGINEERING ASSOCIATES

STATE OF OKLAHOMA — DEPARTMENT OF TRANSPORTATION

JOB PIECE NO. 10981(05) — SHEET NO. B022

I:\Active\1611\Drawings\B022 Pier 10.dwg, 11/2/2020 1:18:42 PM, Deanne

REVISIONS		
REV. NO.	DESCRIPTION	DATE

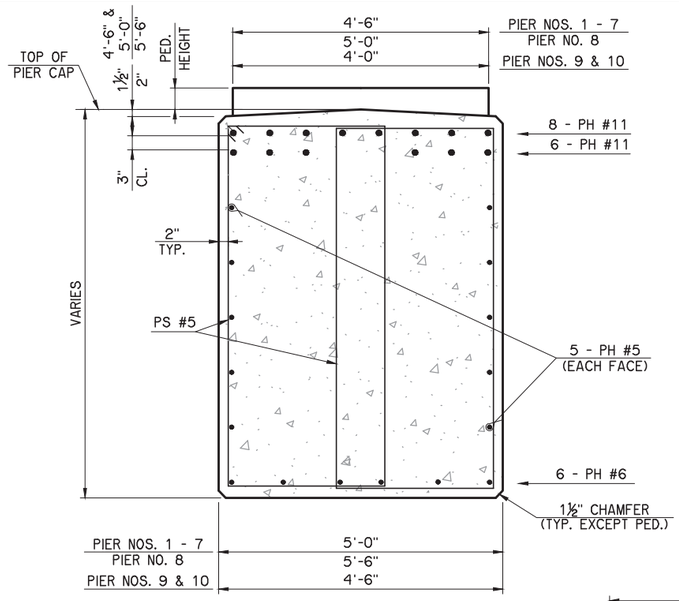

SECTION A-A

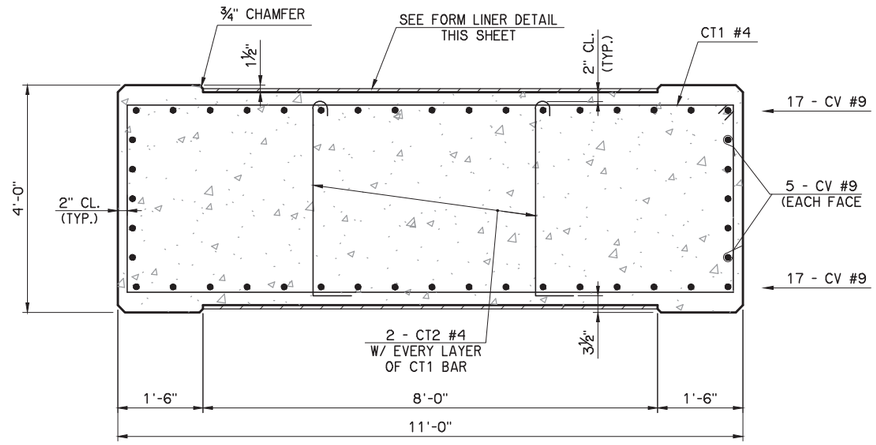

SECTION B-B

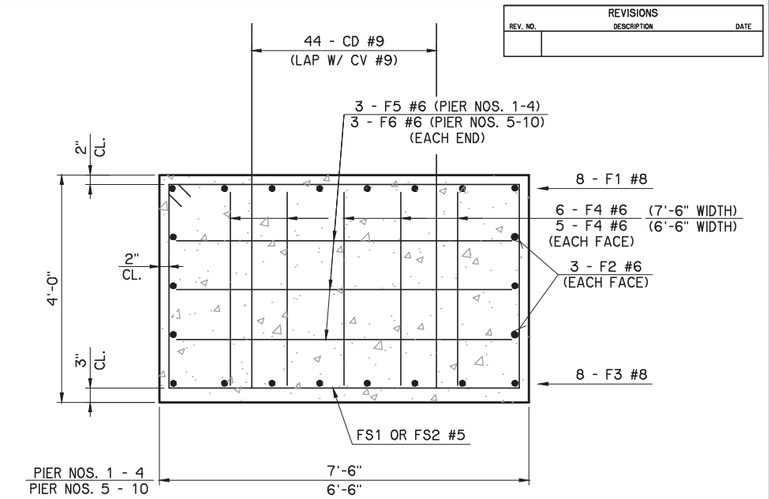

SECTION C-C

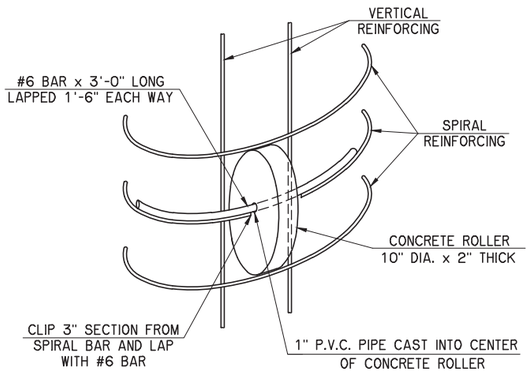

DRILLED SHAFT ROLLER DETAIL

NOTE:
USE CONCRETE IN THE ROLLER WITH A MINIMUM 28 DAY COMPRESSION STRENGTH OF 4,000 PSI. DO NOT SUBSTITUTE SLAB BOLSTERS OR HIGH CHAIRS FOR THE CONCRETE ROLLERS.

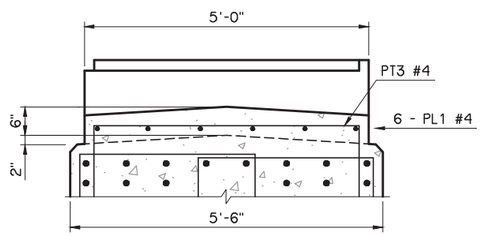

SECTION E
PIER NO. 8

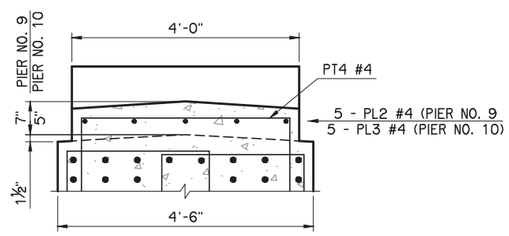

SECTION E
PIER NO. 9 & 10

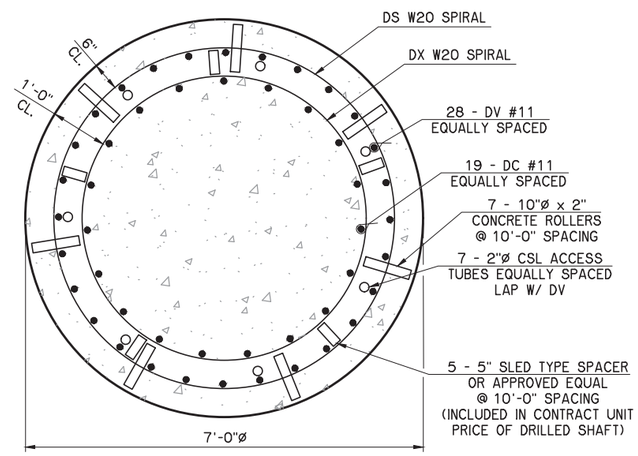

SECTION D-D
PIER NOS. 1 - 4

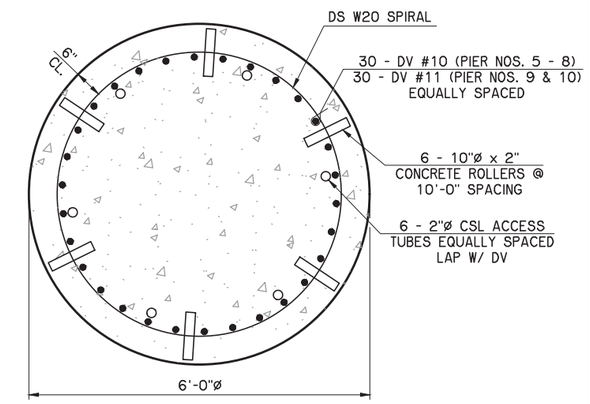

SECTION D-D
PIER NOS. 5 - 10

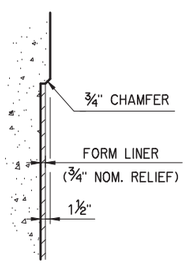

FORM LINER DETAIL
SEE "CONCRETE" ON SHEET AB01 FOR FORM LINER DESCRIPTION

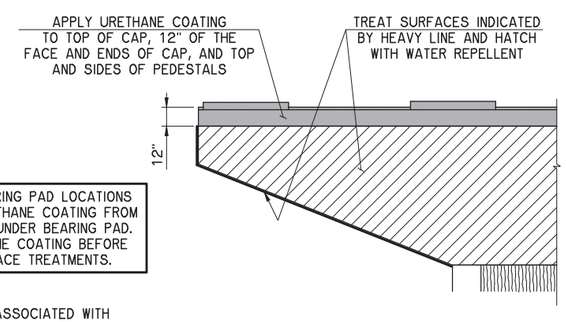

MASK OFF BEARING PAD LOCATIONS PREVENTING URETHANE COATING FROM BEING APPLIED UNDER BEARING PAD. APPLY URETHANE COATING BEFORE OTHER SURFACE TREATMENTS.

NOTE:
INCLUDE COSTS ASSOCIATED WITH URETHANE COATING IN THE CONTRACT UNIT PRICE OF "ELASTOMERIC COATING".

SURFACE TREATMENT DETAIL

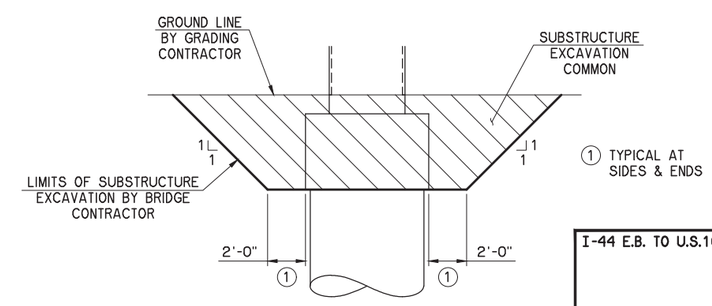

1 TYPICAL AT SIDES & ENDS

TYPICAL PIER EXCAVATION

I-44 E.B. TO U.S.169 N.B. RAMP D	TULSA COUNTY	Design	AFW	
PIER DETAILS SHEET 6 OF 8 PIER DETAILS		Detail	DRB	
		Check	ADT	
		WHITE ENGINEERING ASSOCIATES		
STATE OF OKLAHOMA	DEPARTMENT OF TRANSPORTATION			
	JOB PIECE NO. 10981(05)	SHEET NO. B023		

I:\Active\16111\Drawings\B023 Pier details.dwg, 11/2/2020 1:19:05 PM, Deanne

REVISIONS		
REV. NO.	DESCRIPTION	DATE

PIER BAR LIST
PIER NOS. 1 – 4

MARK	SIZE	NO.	FORM	LENGTH	LENGTH VARIATION
EPOXY COATED REINFORCING					
COMMON REINFORCING (ONE SHOWN, FOUR REQUIRED)					
CD	#9	44	STR.	8'-0"	
F1	#8	8	BNT.	13'-6"	
F2	#6	6	STR.	11'-8"	
F3	#8	8	STR.	11'-8"	
F4	#6	12	BNT.	5'-5"	
F5	#6	6	BNT	9'-0"	
FS1	#5	8	BNT.	22'-5"	
PE1	#5	6	BNT.	6'-2"	
PE2	#5	8	BNT.	4'-1"	
PH1	#11	14	BNT.	40'-8"	
PH2	#5	4	STR.	37'-6"	
(1) PH3	#5	6	STR.	24'-7" AVG.	17'-9" TO 31'-5"
PH4	#6	6	BNT.	38'-6"	
(2) PS1	#5	76	BNT.	15'-3" AVG.	11'-7" TO 18'-11"
PS2	#5	11	BNT.	23'-0"	
PIER NO. 1					
CT1	#4	13	BNT.	28'-9"	
CT2	#4	26	BNT.	4'-7"	
CV1	#9	44	STR.	17'-3"	
P1	#4	48	BNT.	7'-6"	
P2	#4	20	BNT.	6'-4" AVG.	4'-10" TO 7'-10"
P3	#4	16	BNT.	6'-8" AVG.	5'-2" TO 8'-2"
P4	#4	4	BNT.	9'-5"	
PIER NO. 2					
CT1	#4	15	BNT.	28'-9"	
CT2	#4	30	BNT.	4'-7"	
CV2	#9	44	STR.	19'-3"	
P1	#4	48	BNT.	7'-6"	
PIER NO. 3					
CT1	#4	17	BNT.	28'-9"	
CT2	#4	34	BNT.	4'-7"	
CV3	#9	44	STR.	20'-9"	
P1	#4	48	BNT.	7'-6"	
PIER NO. 4					
CT1	#4	19	BNT.	28'-9"	
CT2	#4	38	BNT.	4'-7"	
CV4	#9	44	STR.	23'-3"	
P1	#4	48	BNT.	7'-6"	

PIER BAR LIST
PIER NOS. 5 – 7

MARK	SIZE	NO.	FORM	LENGTH	LENGTH VARIATION
EPOXY COATED REINFORCING					
COMMON REINFORCING (ONE SHOWN, THREE REQUIRED)					
CD	#9	44	STR.	8'-0"	
F1	#8	8	BNT.	13'-6"	
F2	#6	6	STR.	11'-8"	
F3	#8	8	STR.	11'-8"	
F4	#6	10	BNT.	5'-5"	
F6	#6	6	BNT	8'-0"	
FS2	#5	10	BNT.	20'-5"	
P1	#4	48	BNT.	7'-6"	
PE1	#5	6	BNT.	6'-2"	
PE2	#5	8	BNT.	4'-1"	
PH1	#11	14	BNT.	40'-8"	
PH2	#5	4	STR.	37'-6"	
(1) PH3	#5	6	STR.	24'-7" AVG.	17'-9" TO 31'-5"
PH4	#6	6	BNT.	38'-6"	
(2) PS1	#5	76	BNT.	15'-3" AVG.	11'-7" TO 18'-11"
PS2	#5	11	BNT.	23'-0"	
PIER NO. 5					
CT1	#4	18	BNT.	28'-9"	
CT2	#4	36	BNT.	4'-7"	
CV5	#9	44	STR.	22'-3"	
PIER NO. 6					
CT1	#4	21	BNT.	28'-9"	
CT2	#4	42	BNT.	4'-7"	
CV6	#9	44	STR.	24'-9"	
PIER NO. 7					
CT1	#4	19	BNT.	28'-9"	
CT2	#4	38	BNT.	4'-7"	
CV7	#9	44	STR.	22'-9"	

PIER BAR LIST
PIER NO. 8

MARK	SIZE	NO.	FORM	LENGTH	LENGTH VARIATION
EPOXY COATED REINFORCING					
CD	#9	44	STR.	8'-0"	
CT1	#4	17	BNT.	28'-9"	
CT2	#4	34	BNT.	4'-7"	
CV8	#9	44	STR.	21'-3"	
F1	#8	8	BNT.	13'-6"	
F2	#6	6	STR.	11'-8"	
F3	#8	8	STR.	11'-8"	
F4	#6	10	BNT.	5'-5"	
F6	#6	6	BNT	8'-0"	
FS2	#5	10	BNT.	20'-5"	
P5	#4	48	BNT	8'-5"	
P6	#4	4	BNT.	8'-3"	
(3) P7	#4	16	BNT.	6'-5" AVG.	5'-2" TO 7'-8"
P8	#4	4	BNT.	8'-7"	
(3) P9	#4	16	BNT.	6'-7" AVG.	5'-4" TO 7'-10"
P10	#4	4	BNT.	10'-0"	
PE3	#5	6	BNT.	6'-8"	
PE4	#5	8	BNT.	4'-0"	
PH5	#11	14	BNT.	41'-2"	
PH6	#5	4	STR.	38'-0"	
(1) PH7	#5	6	STR.	25'-0" AVG.	18'-3" TO 31'-9"
PH8	#6	6	BNT.	39'-2"	
PL1	#4	6	STR.	12'-9"	
PL4	#4	6	STR.	9'-11"	
(2) PS3	#5	76	BNT.	15'-11" AVG.	12'-1" TO 19'-9"
PS4	#5	11	BNT.	24'-0"	
PT1	#4	2	BNT.	19'-5"	
PT3	#4	14	BNT.	7'-8"	

PIER BAR LIST
PIER NO. 9

MARK	SIZE	NO.	FORM	LENGTH	LENGTH VARIATION
EPOXY COATED REINFORCING					
CD	#9	44	STR.	8'-0"	
CT1	#4	16	BNT.	28'-9"	
CT2	#4	32	BNT.	4'-7"	
CV9	#9	44	STR.	19'-9"	
F1	#8	8	BNT.	13'-6"	
F2	#6	6	STR.	11'-8"	
F3	#8	8	STR.	11'-8"	
F4	#6	10	BNT.	5'-5"	
F6	#6	6	BNT	8'-0"	
FS2	#5	10	BNT.	20'-5"	
P11	#4	20	BNT.	7'-11"	
P12	#4	24	BNT.	7'-5"	
PE2	#5	8	BNT.	4'-1"	
PE5	#5	6	BNT.	5'-8"	
PH9	#11	14	BNT.	40'-1"	
PH10	#5	4	STR.	36'-11"	
(1) PH11	#5	6	STR.	24'-8" AVG.	18'-1" TO 31'-3"
PH12	#6	6	BNT.	38'-0"	
PL2	#4	5	STR.	12'-6"	
PL5	#4	5	STR.	10'-3"	
(4) PS5	#5	72	BNT.	14'-9" AVG.	11'-1" TO 18'-5"
PS6	#5	11	BNT.	21'-10"	
PT2	#4	3	BNT.	16'-5"	
PT4	#4	14	BNT.	6'-8"	

(1) 2 SETS OF 3
(2) 4 SETS OF 19
(3) 4 SETS OF 4
(4) 4 SETS OF 18

PIER QUANTITIES

ITEM DESCRIPTION	UNIT	PHASE 3				PHASE 2	PHASE 1						
		PIER NO. 1	PIER NO. 2	PIER NO. 3	TOTAL	PIER NO. 4	PIER NO. 5	PIER NO. 6	PIER NO. 7	PIER NO. 8	PIER NO. 9	PIER NO. 10	TOTAL
SUBSTRUCTURE EXCAVATION COMMON	C.Y.	89	98	98	285	98	62	62	62	62	62	62	372
ELASTOMERIC COATING	S.F.	321.8	305.3	305.3	932.4	305.3	305.3	305.3	303.8	380.9	314.6	282.8	1,892.7
CLASS A CONCRETE	C.Y.	73.1	75.6	78.0	226.7	81.9	78.6	82.6	79.3	84.2	71.7	62.8	459.2
EPOXY COATED REINFORCING STEEL	LB.	10,770	10,940	11,210	32,920	11,640	11,460	11,910	11,560	11,830	11,020	10,050	67,830
WATER REPELLENT (VISUALLY INSPECTED)	S.Y.	55	55	55	165	55	55	55	55	57	52	45	319
DRILLED SHAFTS 72" DIAMETER	L.F.						22	17	26	27	27	28	147
DRILLED SHAFTS 84" DIAMETER	L.F.	17	22	21	60	22							
CROSSHOLE SONIC LOGGING	EA.	1	1	1	3	1	1	1	1	1	1	1	6

I-44 E.B. TO U.S.169 N.B. RAMP D — TULSA COUNTY

PIER DETAILS
SHEET 7 OF 8
PIER DETAILS

Design	AFW	
Detail	DRB	
Check	ADT	

WHITE ENGINEERING ASSOCIATES

STATE OF OKLAHOMA — DEPARTMENT OF TRANSPORTATION

JOB PIECE NO. 10981(05) — SHEET NO. B024

I:\Active\16111\Drawings\B024 Pier bars7.dwg, 11/2/2020 1:19:27 PM, Deanne

REVISIONS		
REV. NO.	DESCRIPTION	DATE

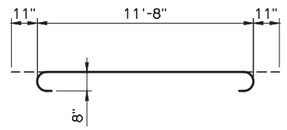

F1 #8 x 13'-6"

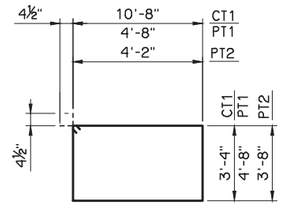

CT1 #4 x 28'-9"
PT1 #4 x 19'-5"
PT2 #4 x 16'-5"

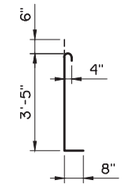

CT2 #4 x 4'-7"

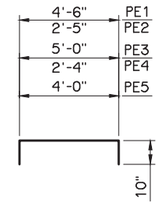

PE1 #5 x 6'-2"
PE2 #5 x 4'-1"
PE3 #5 x 6'-8"
PE4 #5 x 4'-0"
PE5 #5 x 5'-8"

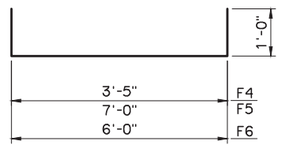

F4 #6 x 5'-5"
F5 #6 x 9'-0"
F6 #6 x 8'-0"

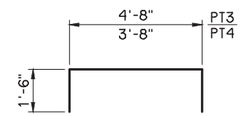

PT3 #4 x 7'-8"
PT4 #4 x 6'-8"

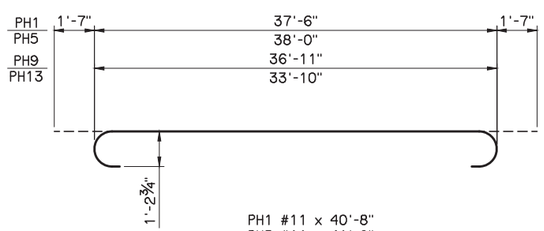

PH1 #11 x 40'-8"
PH5 #11 x 41'-2"
PH9 #11 x 40'-1"
PH13 #11 x 37'-0"

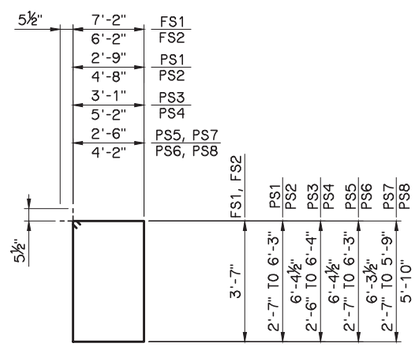

FS1 #5 x 22'-5"
FS2 #5 x 20'-5"
PS1 #5 x 15'-3" AVG.
PS2 #5 x 23'-0"
PS3 #5 x 15'-11" AVG.
PS4 #5 x 24'-0"
PS5 #5 x 14'-9" AVG.
PS6 #5 x 21'-10"
PS7 #5 x 14'-3" AVG.
PS8 #5 x 20'-11"

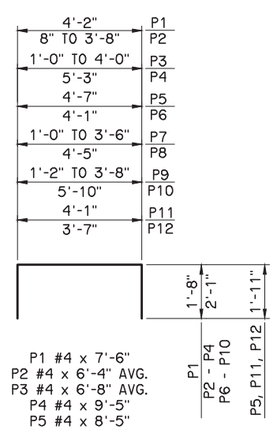

P1 #4 x 7'-6"
P2 #4 x 6'-4" AVG.
P3 #4 x 6'-8" AVG.
P4 #4 x 9'-5"
P5 #4 x 8'-5"
P6 #4 x 8'-3"
P7 #4 x 6'-5" AVG.
P8 #4 x 8'-7"
P9 #4 x 6'-7" AVG.
P10 #4 x 10'-0"
P11 #4 x 7'-11"
P12 #4 x 7'-5"

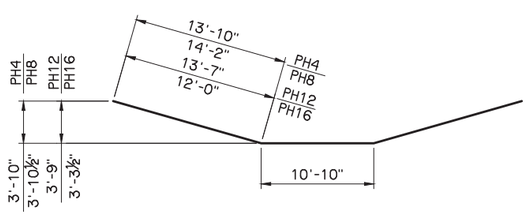

PH4 #6 x 38'-6"
PH8 #6 x 39'-2"
PH12 #6 x 38'-0"
PH16 #6 x 34'-10"

PIER BAR LIST

PIER NO. 10

	MARK	SIZE	NO.	FORM	LENGTH	LENGTH VARIATION
	EPOXY COATED REINFORCING					
	CD	#9	44	STR.	8'-0"	
	CT1	#4	13	BNT.	28'-9"	
	CT2	#4	26	BNT.	4'-7"	
	CV10	#9	44	STR.	17'-3"	
	F1	#8	8	BNT.	13'-6"	
	F2	#6	6	STR.	11'-8"	
	F3	#8	8	STR.	11'-8"	
	F4	#6	10	BNT.	5'-5"	
	F6	#6	6	BNT	8'-0"	
	FS2	#5	10	BNT.	20'-5"	
	P11	#4	20	BNT.	7'-11"	
	P12	#4	24	BNT.	7'-5"	
	PE2	#5	8	BNT.	4'-1"	
	PE5	#5	6	BNT.	5'-8"	
	PH13	#11	14	BNT.	37'-0"	
	PH14	#5	4	STR.	33'-10"	
(1)	PH15	#5	6	STR.	23'-8" AVG.	17'-8" TO 29'-8"
	PH16	#6	6	BNT.	34'-10"	
	PL3	#4	5	STR.	11'-6"	
(2)	PS7	#5	64	BNT.	14'-3" AVG.	11'-1" TO 17'-5"
	PS8	#5	11	BNT.	20'-11"	
	PT2	#4	2	BNT.	16'-5"	
	PT4	#4	6	BNT.	6'-8"	

(1) 2 SETS OF 3

(2) 4 SETS OF 16

(3) LENGTH SHOWN DOES NOT ACCOUNT FOR SPLICES. CONTRACTOR MAY ADD SPLICES AS NECESSARY, BUT PAYMENT WILL NOT BE MADE FOR EXTRA LENGTH REQUIRED FOR SPLICES.

(4) INCLUDED IN CONTRACT UNIT PRICE OF DRILLED SHAFT.

DRILLED SHAFT BAR LIST

	MARK	SIZE	NO.	FORM	LENGTH
	PLAIN REINFORCING				
	PIER NO. 1				
(4)	DC1	#11	19	STR.	20'-3"
(3)(4)	DS1	W20	1	BNT.	679'-2"
(4)	DV1	#11	28	STR.	20'-3"
(3)(4)	DX1	W20	1	BNT.	565'-8"
	PIER NO. 2				
(4)	DC2	#11	19	STR.	25'-3"
(3)(4)	DS2	W20	1	BNT.	863'-4"
(4)	DV2	#11	28	STR.	25'-3"
(3)(4)	DX2	W20	1	BNT.	719'-1"
	PIER NO. 3				
(4)	DC3	#11	19	STR.	24'-3"
(3)(4)	DS3	W20	1	BNT.	825'-11"
(4)	DV3	#11	28	STR.	24'-3"
(3)(4)	DX3	W20	1	BNT.	687'-10"
	PIER NO. 4				
(4)	DC4	#11	19	STR.	25'-3"
(3)(4)	DS4	W20	1	BNT.	863'-4"
(4)	DV4	#11	28	STR.	25'-3"
(3)(4)	DX4	W20	1	BNT.	719'-1"
	PIER NO. 5				
(3)(4)	DS5	W20	1	BNT.	719'-1"
(4)	DV5	#10	30	STR.	25'-3"
	PIER NO. 6				
(3)(4)	DS6	W20	1	BNT.	565'-8"
(4)	DV6	#10	30	STR.	20'-3"
	PIER NO. 7				
(3)(4)	DS7	W20	1	BNT.	843'-10"
(4)	DV7	#10	30	STR.	29'-3"
	PIER NO. 8				
(3)(4)	DS8	W20	1	BNT.	875'-0"
(4)	DV8	#10	30	STR.	30'-3"
	PIER NO. 9				
(3)(4)	DS9	W20	1	BNT.	875'-0"
(4)	DV9	#11	30	STR.	30'-3"
	PIER NO. 10				
(3)(4)	DS10	W20	1	BNT.	906'-2"
(4)	DV10	#11	30	STR.	31'-3"

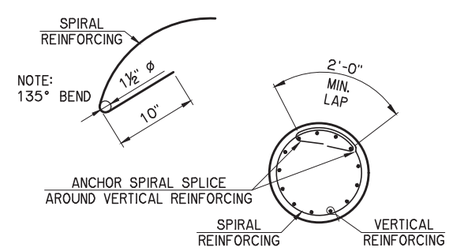

SPIRAL REINFORCING SPLICE DETAIL

I-44 E.B. TO U.S.169 N.B. RAMP D — TULSA COUNTY

PIER DETAILS
SHEET 8 OF 8
PIER DETAILS

Design	AFW	
Detail	DRB	
Check	ADT	

WHITE ENGINEERING ASSOCIATES

STATE OF OKLAHOMA — DEPARTMENT OF TRANSPORTATION

JOB PIECE NO. 10981(05) — SHEET NO. B025

I:\Active\1611\Drawings\B025 Pier bars8.dwg, 11/2/2020 1:19:49 PM, Deanne

REVISIONS		
REV. NO.	DESCRIPTION	DATE

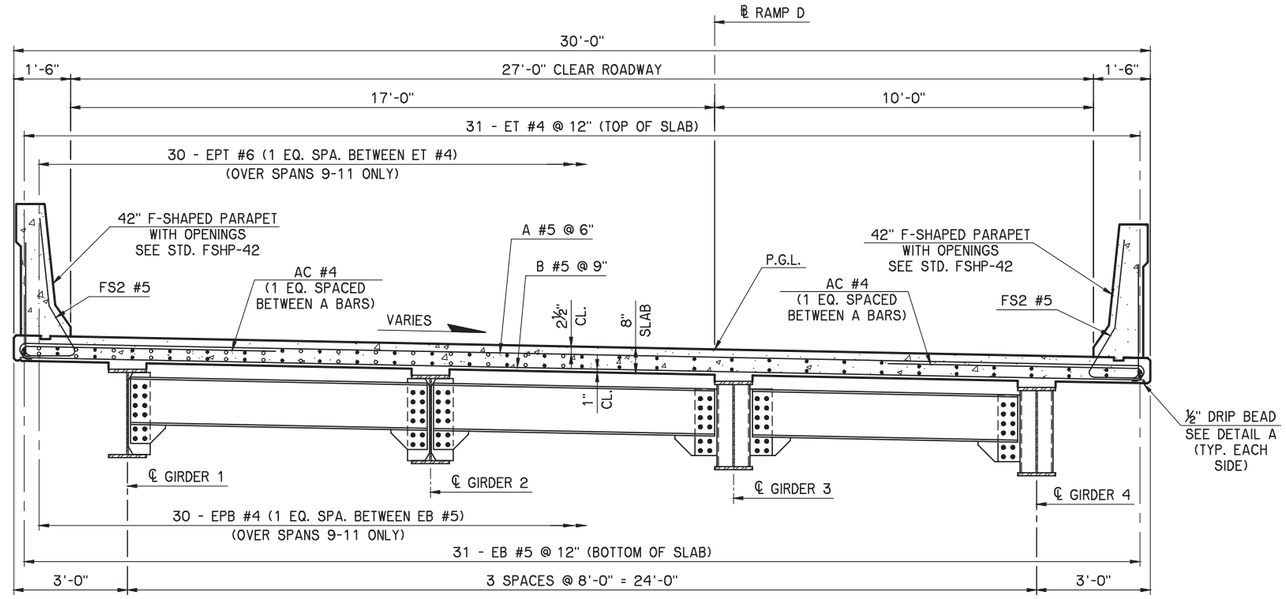

HALF SECTION AT INTERMEDIATE DIAPHRAGM

HALF SECTION AT END DIAPHRAGM

TYPICAL CROSS SECTION

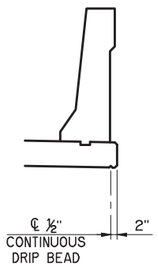

DETAIL A

NOTES:
ROTATE HOOKS ON A AND AC BARS TO MAINTAIN MINIMUM CLEARANCE.

CROSS SLOPE VARIES IN BOTH DIRECTIONS. SEE SUPERELEVATION TRANSITION DATA ON SHEET B003 FOR CROSS SLOPE.

FOR BAR BENDS AND BAR LIST, SEE SHEET B044.

FOR PARAPET LAYOUT WITH DRAIN OPENINGS, SEE SHEET B045.

SUPERSTRUCTURE CONSTRUCTED IN PHASE 3.

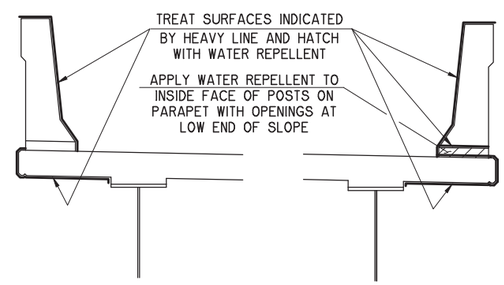

WATER REPELLENT TREATMENT DETAILS

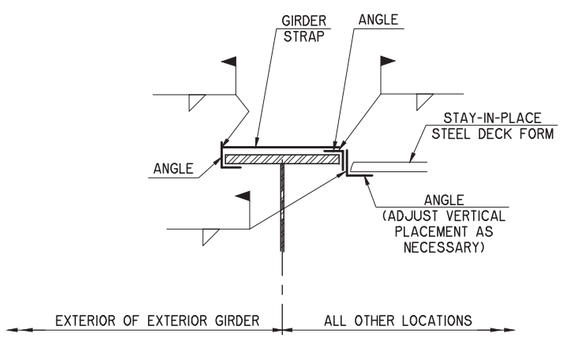

STAY-IN-PLACE STEEL DECK FORM FLANGE CONNECTION DETAIL

NOTE:
DO NOT WELD TO THE TOP FLANGE OR STUDS. REPORT ANY ARC STRIKE, WELD SPLATTER OR WELDING ON TOP FLANGE TO THE ENGINEER OF RECORD IMMEDIATELY.

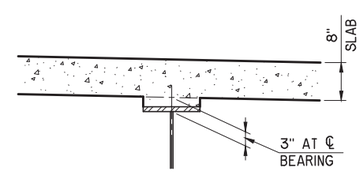

GIRDER HAUNCH DETAIL

NOTE:
PLAN QUANTITIES FOR CLASS AA CONCRETE INCLUDE GIRDER HAUNCHES. THE HAUNCH HEIGHT SHOWN IS THE THEORETICAL HAUNCH HEIGHT MEASURED FROM THE BOTTOM OF THE DECK SLAB TO THE TOP OF THE GIRDER WEB, AND VARIES ACROSS THE SPAN. DETERMINE THE ACTUAL HAUNCH HEIGHT (ACCOUNTING FOR GIRDER CAMBER, DEAD LOAD DEFLECTION AND ROADWAY GRADE) AFTER ERECTION OF THE GIRDERS AND SUBMIT TO THE ENGINEER FOR APPROVAL. THE ENGINEER WILL NOT MEASURE DIFFERENCES BETWEEN THE THEORETICAL AND THE ACTUAL HAUNCH HEIGHTS FOR PAYMENT.

SUPERSTRUCTURE QUANTITIES

ITEM DESCRIPTION	UNIT	TOTAL
ENGINEERED FALSEWORK	L.SUM	1
SAW-CUT GROOVING	S.Y.	2,678.2
42" F-SHAPED PARAPET	L.F.	1,785.5
STRUCTURAL STEEL	LB.	874,110
STAINLESS STEEL FIXED BEARING ASSEMBLY	EA.	24
STAINLESS STEEL EXP. BEARING ASSEMBLY	EA.	56
CLASS AA CONCRETE	C.Y.	695.8
EPOXY COATED REINFORCING STEEL	LB.	189,290
WATER REPELLENT (VISUALLY INSPECTED)	S.Y.	1,616
SEALED EXPANSION JOINTS	L.F.	112.66
SEALER CRACK PREPARATION	L.F.	323
SEALER RESIN	GAL.	3.6

I-44 E.B. TO U.S.169 N.B. RAMP D — TULSA COUNTY

SUPERSTRUCTURE DETAILS
SHEET 1 OF 21
TYPICAL SECTION

Design	AFW	
Detail	DRB	
Check	AFW	

WHITE ENGINEERING ASSOCIATES

STATE OF OKLAHOMA — DEPARTMENT OF TRANSPORTATION

JOB PIECE NO. 10981(05) — SHEET NO. B026

I:\Active\1611\Drawings\B026 SS1 Typ.dwg, 11/2/2020 1:21:46 PM, Deanne

REVISIONS		
REV. NO.	DESCRIPTION	DATE

INSTALL ALL DIAPHRAGMS AND TIGHTEN ALL BOLTS BEFORE PLACING CONCRETE FOR THE DECK SLAB OR APPLYING OTHER MASSIVE LOADS TO THE GIRDERS.

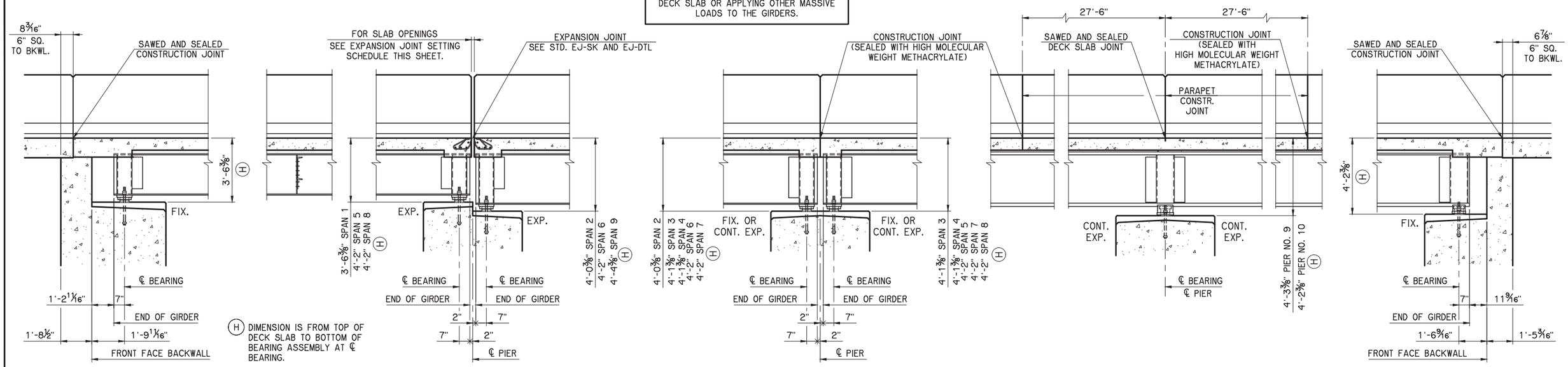

ABUTMENT NO. 1 | INTERMEDIATE DIAPHRAGM | PIER NOS. 1, 5 & 8 | PIER NOS. 2, 3, 4, 6 & 7 | PIER NOS. 9 & 10 | ABUTMENT NO. 2

LONGITUDINAL SECTION

DIMENSIONS ALONG ℄ OF GIRDER
(END DIAPHRAGMS NOT SHOWN FOR CLARITY)

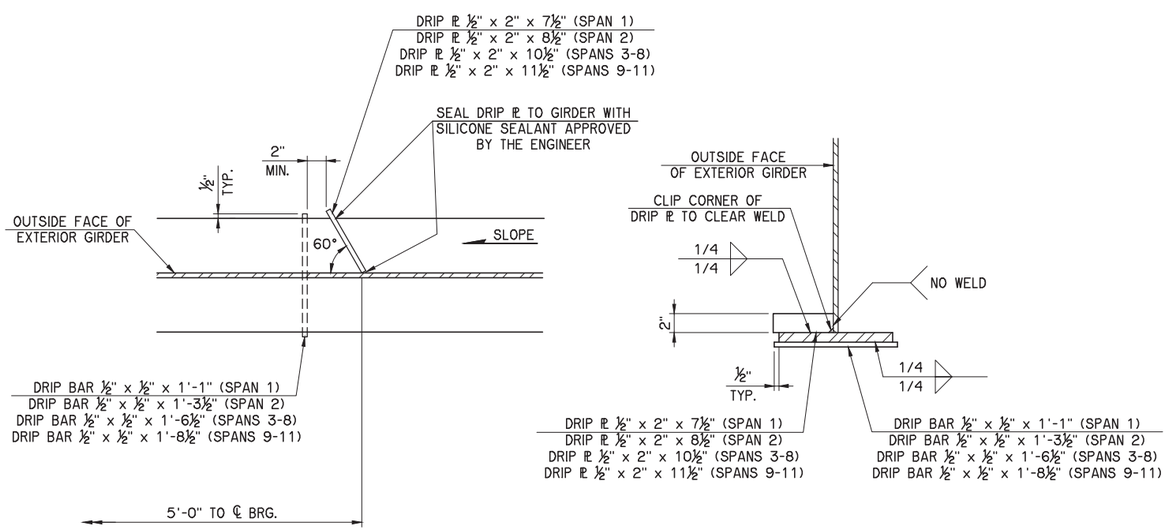

PLAN | ELEVATION

NOTE:
INCLUDE ALL COSTS OF SILICONE SEALER IN OTHER ITEMS OF WORK.

DRIP PLATE AND DRIP BAR DETAILS

SPANS 1-8 SHOWN,
SPANS 9-11 OPP. HAND

EXPANSION JOINT SETTING SCHEDULE

EXP. JOINT OPENING	TEMPERATURE F°		
	PIER NO. 1	PIER NO. 5	PIER NO. 8
3 1/4"			0
3 1/8"		2	6
3"		9	12
2 7/8"		15	18
2 3/4"		21	24
2 5/8"		28	30
2 1/2"	11	34	36
2 3/8"	23	41	42
2 1/4"	35	47	48
2 1/8"	48	54	54
2"	60	60	60
1 7/8"	72	66	66
1 3/4"	85	73	72
1 5/8"	97	79	78
1 1/2"	109	86	84
1 3/8"		92	90
1 1/4"		99	96
1 1/8"		105	102
1"		111	108
7/8"		118	114
3/4"			120

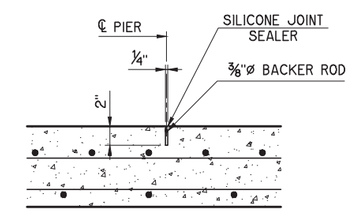

SAWED AND SEALED JOINT DETAIL

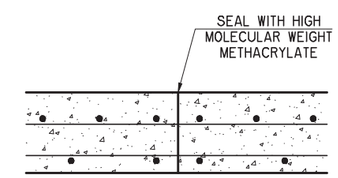

CONSTRUCTION JOINT DETAIL

(SCHEDULED SHOWN, UNSCHEDULED SIMILAR)

I-44 E.B. TO U.S.169 N.B. RAMP D	TULSA COUNTY	Design	AFW	
SUPERSTRUCTURE DETAILS SHEET 2 OF 21 LONGITUDINAL SECTION		Detail	DRB	
		Check	AFW	
		WHITE ENGINEERING ASSOCIATES		
STATE OF OKLAHOMA	DEPARTMENT OF TRANSPORTATION			
	JOB PIECE NO. 10981(05)			SHEET NO. B027

I:\Active\1611\Drawings\B027 SS2 Long.dwg, 11/2/2020 1:22:11 PM, Deanne

REVISIONS		
REV. NO.	DESCRIPTION	DATE

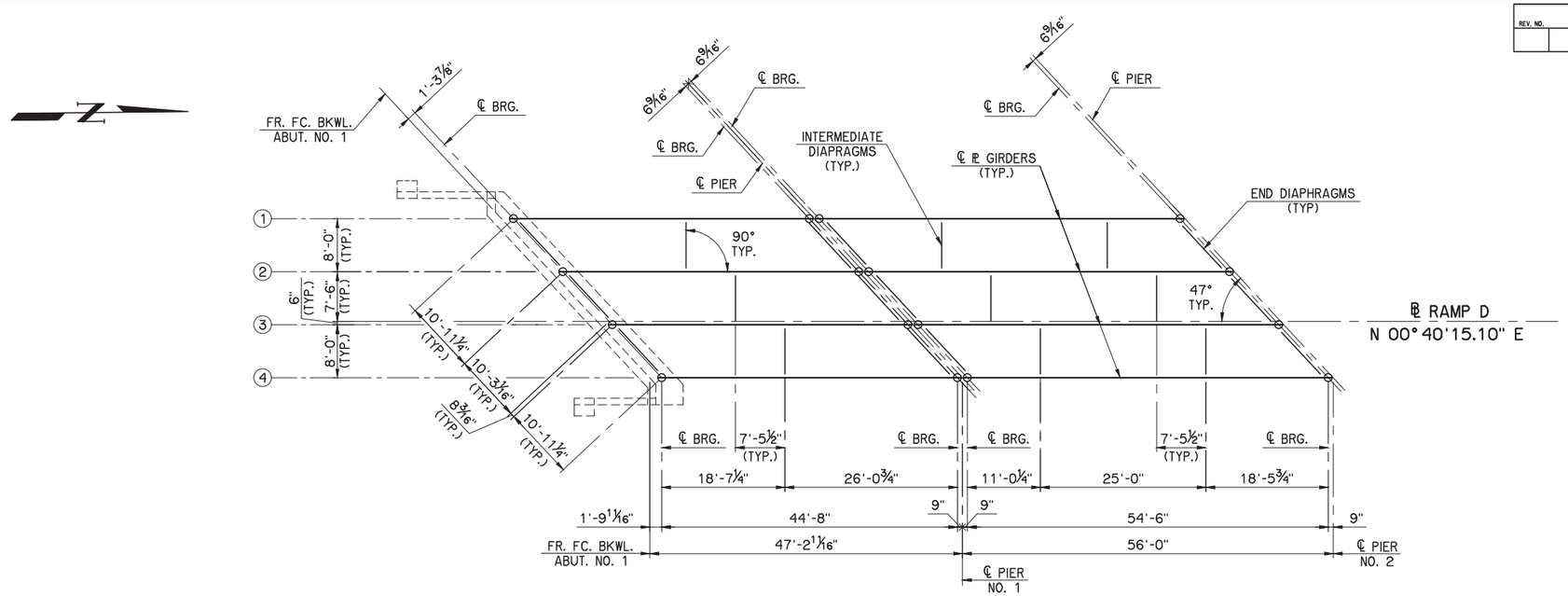

SPAN NO. 1

SPAN NO. 2

NOTE:
ALL SUBSTRUCTURE IS PARALLEL WITH
A BEARING OF N 47° 40'15.10" E

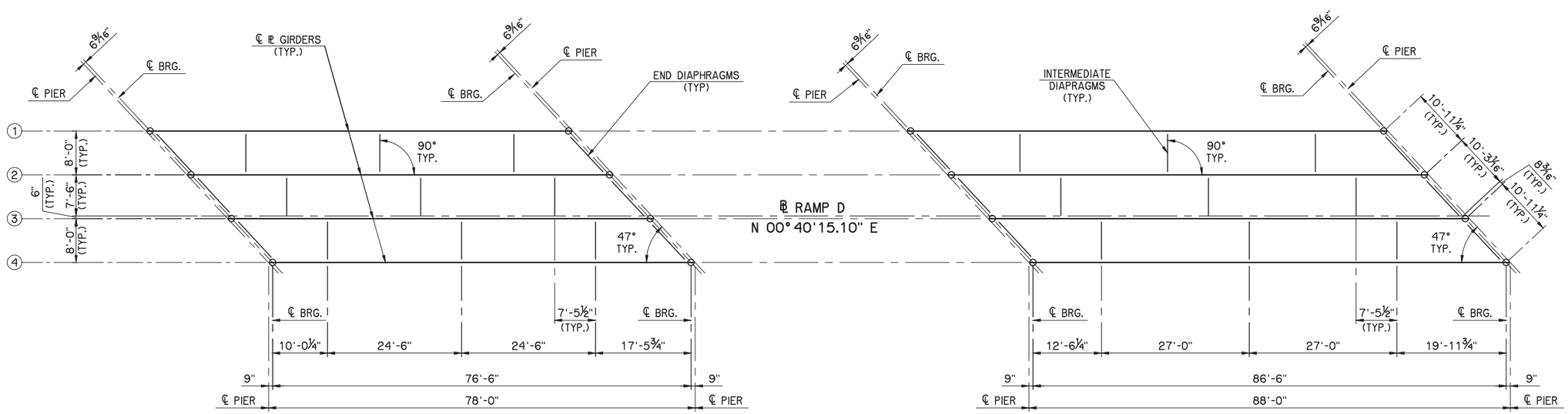

SPAN NOS. 3 & 4

SPAN NOS. 5 - 8

FRAMING PLAN

ALL DIMENSIONS ARE SHOWN AT ℄ GIRDER

I-44 E.B. TO U.S.169 N.B. RAMP D — TULSA COUNTY

SUPERSTRUCTURE DETAILS
SHEET 3 OF 21
FRAMING PLAN

Design	AFW	
Detail	DRB	
Check	AFW	
WHITE ENGINEERING ASSOCIATES		

STATE OF OKLAHOMA — DEPARTMENT OF TRANSPORTATION

JOB PIECE NO. 10981(05) — SHEET NO. B028

I:\Active\1611\Drawings\B028 SS3 Framing.dwg, 11/2/2020 1:22:35 PM, Deanne

REVISIONS		
REV. NO.	DESCRIPTION	DATE

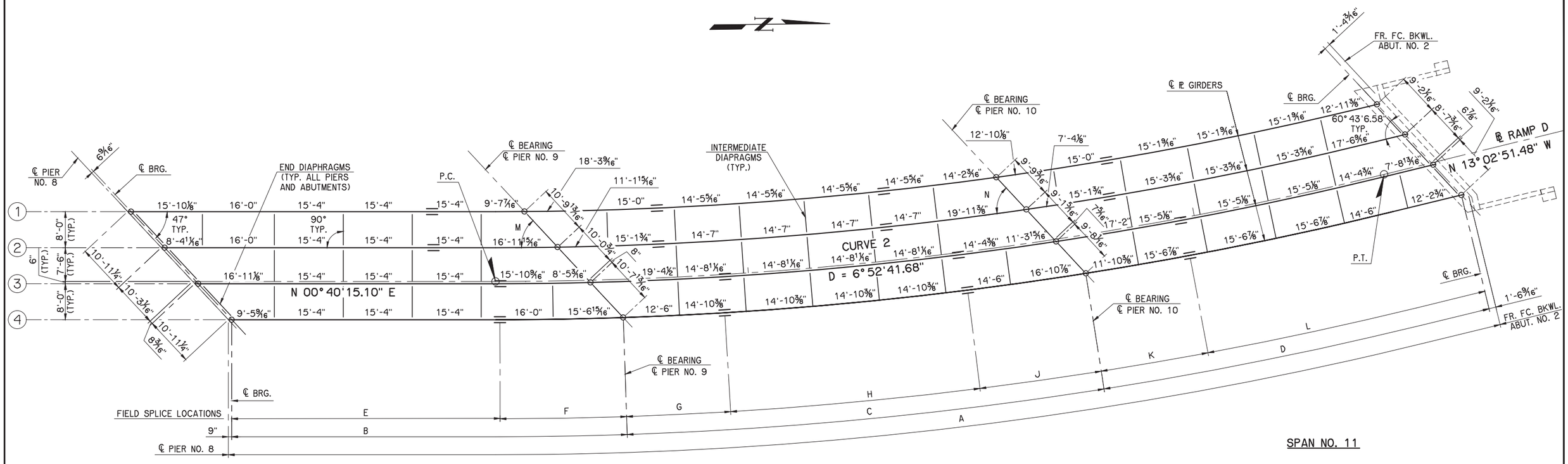

FRAMING PLAN

ALL DIMENSIONS ARE SHOWN AT ℄ GIRDER

NOTES:

ALL SUBSTRUCTURE IS PARALLEL WITH A BEARING OF N 47° 40'15.10" E

ALL DIAPHRAGM LOCATIONS DIMENSIONS ON FRAMING PLAN ARE ALONG ℄ GIRDER AND FROM ℄ CONNECTION PLATE TO ℄ CONNECTION PLATE.

ALL ANGLES ARE AT ℄ GIRDERS.

DIMENSION TABLE

LOCATION	℄ BRG. TO P.C.	P.T. TO ℄ BRG.	A	B	C	D	E	F	G	H	J	K	L	M	N
GIRDER 1	81'-0 3/8"	2'-1 9/16"	281'-2 5/16"	87'-5 9/16"	105'-3"	86'-2 3/16"	66'-10 7/8"	20'-6 1/16"	29'-5 5/16"	50'-7"	25'-2 1/16"	24'-9 5/16"	61'-4 7/8"	47° 27'03.03"	54° 49'38.76"
GIRDER 2	73'-6 7/8"	6'-7 3/8"	280'-1 5/8"	87'-4 9/16"	104'-7 1/16"	85'-10 7/16"	59'-9 1/4"	27'-7 5/16"	22'-4 1/16"	50'-10"	31'-4 3/8"	18'-7 5/8"	67'-2 13/16"	47° 57'30.47"	55° 13'04.05"
GIRDER 3	66'-1 5/16"	11'-1 3/16"	279'-0 15/16"	87'-2 7/8"	103'-11 9/16"	85'-6 15/16"	67'-2 1/8"	20'-0 3/4"	29'-11 1/4"	52'-1"	21'-11 5/16"	28'-0 1/16"	57'-6 1/4"	48° 27'08.75"	55° 35'55.94"
GIRDER 4	58'-7 13/16"	15'-7"	278'-0 3/16"	87'-0 9/16"	103'-4 5/16"	85'-3 3/4"	59'-7 1/2"	27'-5 1/16"	22'-6 15/16"	54'-3"	26'-6 3/8"	23'-5 3/8"	61'-10 1/8"	48° 56'00.11"	55° 58'15.70"

I-44 E.B. TO U.S.169 N.B. RAMP D — TULSA COUNTY

SUPERSTRUCTURE DETAILS

SHEET 4 OF 21

FRAMING PLAN

Design	AFW	
Detail	DRB	
Check	AFW	

WHITE ENGINEERING ASSOCIATES

STATE OF OKLAHOMA — DEPARTMENT OF TRANSPORTATION

JOB PIECE NO. 10981(05) — SHEET NO. B029

I:\Active\1611\Drawings\B029 SS4 Framing.dwg, 11/2/2020 1:23:23 PM, Deanne

REVISIONS		
REV. NO.	DESCRIPTION	DATE

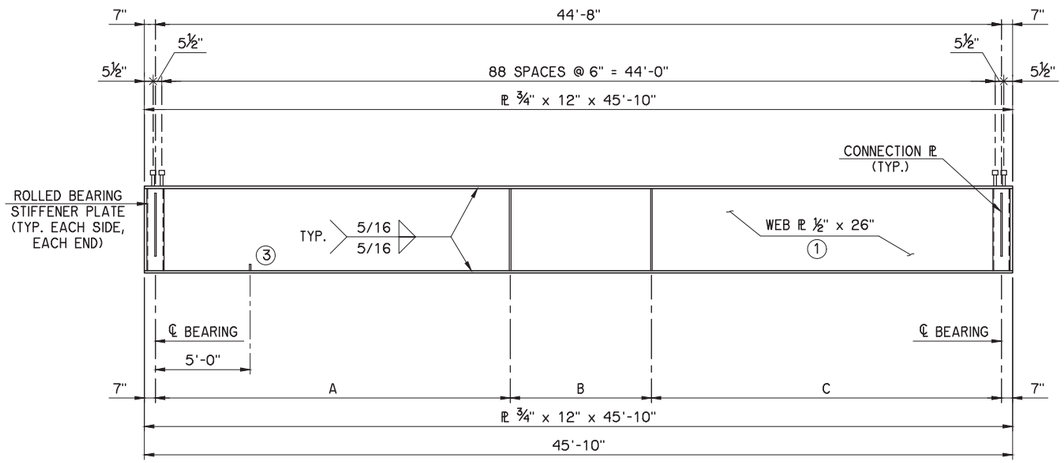

ELEVATION
SPAN 1

SPAN LENGTH
SHEAR CONNECTOR LOCATIONS
① TOP FLANGE PL
℄ DRIP PL & DRIP BAR
② DIAPHRAGM SPACING
① BOTTOM FLANGE PL
GIRDER LENGTH

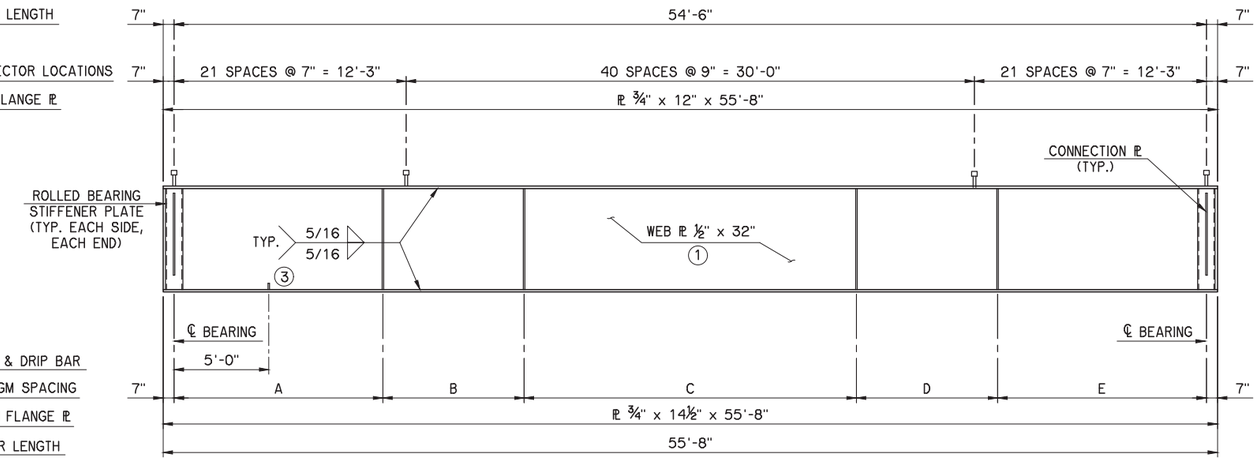

ELEVATION
SPAN 2

NOTES:

① PROVIDE STRUCTURAL STEEL TESTED FOR NON-FRACTURE CRITICAL CHARPY V-NOTCH REQUIREMENTS FOR ZONE 2.

SEE GENERAL NOTES FOR MATERIAL AND FABRICATION REQUIREMENTS.

② ALL DIAPHRAGM CONNECTION PLATES ARE ½" x 7". SEE SHEET B036 FOR PLATE DETAILS AND ADDITIONAL GIRDER DETAILS.

③ DRIP PLATE & DRIP BAR ON GIRDERS 1 & 4 ONLY. SEE SHEET B027 FOR DETAILS.

THE STEEL DEFLECTIONS SHOWN AT THE TENTH POINTS ARE DUE TO THE STEEL WEIGHT OF THE GIRDER AND DIAPHRAGMS.

THE CONCRETE DEFLECTIONS SHOWN AT THE TENTH POINTS ARE DEFLECTIONS DUE TO DECK SLAB + HAUNCH + CONCRETE PARAPET. IT DOES NOT INCLUDE THE GIRDER WEIGHT, DIAPHRAGMS OR FUTURE WEARING SURFACE.

PLATE GIRDER DIMENSION SCHEDULE – SPAN 1

LOCATION	A	B	C
GIRDER 1	26'-0¾"		18'-7¼"
GIRDER 2	18'-7¼"	7'-5½"	18'-7¼"
GIRDER 3	18'-7¼"	7'-5½"	18'-7¼"
GIRDER 4	18'-7¼"		26'-0¾"

PLATE GIRDER DIMENSION SCHEDULE – SPAN 2

LOCATION	A	B	C	D	E
GIRDER 1	18'-5¾"		25'-0"		11'-0¼"
GIRDER 2	11'-0¼"	7'-5½"	17'-6½"	7'-5½"	11'-0¼"
GIRDER 3	11'-0¼"	7'-5½"	17'-6½"	7'-5½"	11'-0¼"
GIRDER 4	11'-0¼"		25'-0"		18'-5¾"

FINISH GRADE ELEVATION SCHEDULE – SPAN 1

LOCATION	0.0	0.1	0.2	0.3	0.4	0.5	0.6	0.7	0.8	0.9	1.0
GIRDER 1	660.14	660.23	660.32	660.41	660.50	660.59	660.68	660.77	660.86	660.95	661.04
GIRDER 2	659.95	660.06	660.17	660.29	660.40	660.51	660.62	660.73	660.84	660.97	661.10
GIRDER 3	659.84	659.97	660.10	660.24	660.37	660.50	660.63	660.76	660.89	661.03	661.16
GIRDER 4	659.80	659.95	660.10	660.25	660.41	660.56	660.69	660.82	660.95	661.08	661.22

FINISH GRADE ELEVATION SCHEDULE – SPAN 2

LOCATION	0.0	0.1	0.2	0.3	0.4	0.5	0.6	0.7	0.8	0.9	1.0
GIRDER 1	661.08	661.24	661.40	661.56	661.72	661.88	662.04	662.20	662.36	662.52	662.68
GIRDER 2	661.14	661.30	661.46	661.62	661.78	661.94	662.10	662.26	662.42	662.58	662.74
GIRDER 3	661.20	661.36	661.52	661.68	661.84	662.00	662.16	662.32	662.48	662.64	662.80
GIRDER 4	661.26	661.42	661.58	661.74	661.90	662.06	662.22	662.38	662.54	662.70	662.86

DEAD LOAD DEFLECTION SCHEDULE (IN.) – SPAN 1

LOCATION	0.0	0.1	0.2	0.3	0.4	0.5	0.6	0.7	0.8	0.9	1.0
GIRDERS 1 & 4											
STEEL	0.00"	0.03"	0.06"	0.08"	0.10"	0.10"	0.10"	0.08"	0.06"	0.03"	0.00"
CONCRETE	0.00"	0.23"	0.44"	0.61"	0.71"	0.75"	0.71"	0.61"	0.44"	0.23"	0.00"
TOTAL	0.00"	0.26"	0.50"	0.69"	0.81"	0.85"	0.81"	0.69"	0.50"	0.26"	0.00"
GIRDERS 2 & 3											
STEEL	0.00"	0.03"	0.06"	0.08"	0.10"	0.10"	0.10"	0.08"	0.06"	0.03"	0.00"
CONCRETE	0.00"	0.27"	0.50"	0.69"	0.80"	0.85"	0.80"	0.69"	0.50"	0.27"	0.00"
TOTAL	0.00"	0.30"	0.56"	0.77"	0.90"	0.95"	0.90"	0.77"	0.56"	0.30"	0.00"

DEAD LOAD DEFLECTION SCHEDULE (IN.) – SPAN 2

LOCATION	0.0	0.1	0.2	0.3	0.4	0.5	0.6	0.7	0.8	0.9	1.0
GIRDERS 1 & 4											
STEEL	0.00"	0.05"	0.09"	0.12"	0.13"	0.14"	0.13"	0.12"	0.09"	0.05"	0.00"
CONCRETE	0.00"	0.31"	0.55"	0.72"	0.82"	0.86"	0.83"	0.72"	0.55"	0.31"	0.00"
TOTAL	0.00"	0.36"	0.64"	0.84"	0.95"	1.00"	0.96"	0.84"	0.64"	0.36"	0.00"
GIRDERS 2 & 3											
STEEL	0.00"	0.05"	0.09"	0.12"	0.14"	0.15"	0.14"	0.12"	0.09"	0.05"	0.00"
CONCRETE	0.00"	0.31"	0.57"	0.78"	0.91"	0.96"	0.91"	0.79"	0.57"	0.31"	0.00"
TOTAL	0.00"	0.36"	0.66"	0.90"	1.05"	1.11"	1.05"	0.91"	0.66"	0.36"	0.00"

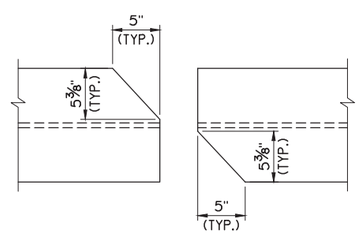

SPAN NO. 1 SPAN NO. 2

TOP FLANGE CLIP DETAIL
AT PIER NO. 1

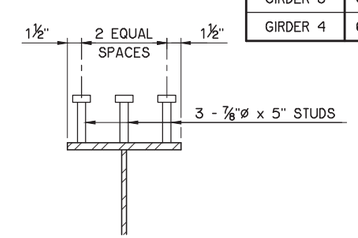

SHEAR CONNECTOR DETAIL

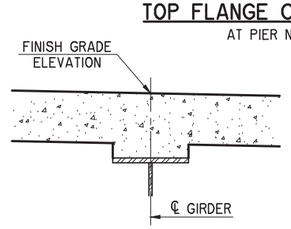

FINISH GRADE ELEVATION DIAGRAM

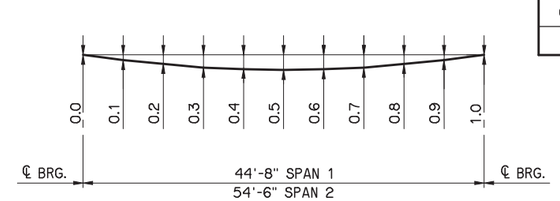

DEAD LOAD DEFLECTION DIAGRAM

I-44 E.B. TO U.S.169 N.B. RAMP D — TULSA COUNTY

SUPERSTRUCTURE DETAILS
SHEET 5 OF 21
GIRDER DETAILS SPAN NOS. 1 & 2

Design	AFW	
Detail	DRB	
Check	AFW	

WHITE ENGINEERING ASSOCIATES

STATE OF OKLAHOMA — DEPARTMENT OF TRANSPORTATION

JOB PIECE NO. 10981(05) — SHEET NO. B030

I:\Active\11611\Drawings\B030 SS5 girder span 1&2.dwg, 11/2/2020 1:23:47 PM, Deanne

REVISIONS		
REV. NO.	DESCRIPTION	DATE

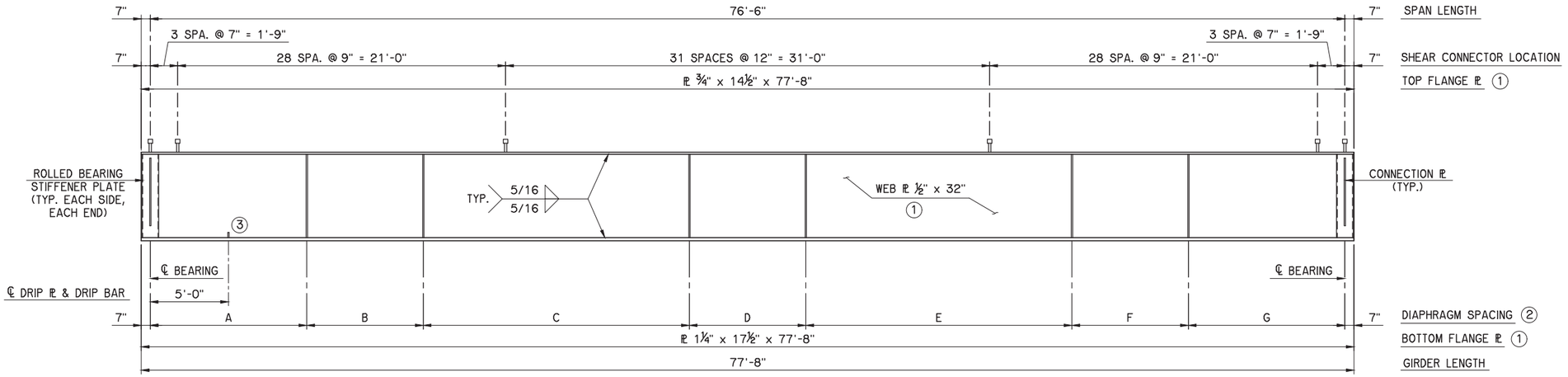

ELEVATION

SPANS 3 & 4

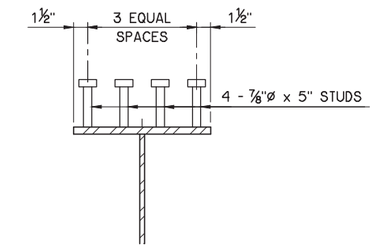

SHEAR CONNECTOR DETAIL

PLATE GIRDER DIMENSION SCHEDULE – SPANS 3 & 4							
LOCATION	A	B	C	D	E	F	G
GIRDER 1	17'-5¾"		24'-6"		24'-6"		10'-0¼"
GIRDER 2	10'-0¼"	7'-5½"	17'-0½"	7'-5½"	17'-0½"	7'-5½"	10'-0¼"
GIRDER 3	10'-0¼"	7'-5½"	17'-0½"	7'-5½"	17'-0½"	7'-5½"	10'-0¼"
GIRDER 4	10'-0¼"		24'-6"		24'-6"		17'-5¾"

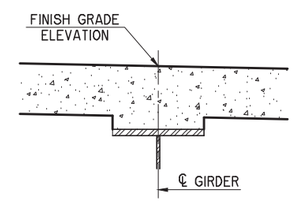

FINISH GRADE ELEVATION DIAGRAM

NOTES:

(1) PROVIDE STRUCTURAL STEEL TESTED FOR NON-FRACTURE CRITICAL CHARPY V-NOTCH REQUIREMENTS FOR ZONE 2.

SEE GENERAL NOTES FOR MATERIAL AND FABRICATION REQUIREMENTS.

(2) ALL DIAPHRAGM CONNECTION PLATES ARE ½" x 7". SEE SHEET B036 FOR PLATE DETAILS AND ADDITIONAL GIRDER DETAILS.

(3) DRIP PLATE & DRIP BAR ON GIRDERS 1 & 4 ONLY. SEE SHEET B027 FOR DETAILS.

THE STEEL DEFLECTIONS SHOWN AT THE TENTH POINTS ARE DUE TO THE STEEL WEIGHT OF THE GIRDER AND DIAPHRAGMS.

THE CONCRETE DEFLECTIONS SHOWN AT THE TENTH POINTS ARE DEFLECTIONS DUE TO DECK SLAB + HAUNCH + CONCRETE PARAPET. IT DOES NOT INCLUDE THE GIRDER WEIGHT, DIAPHRAGMS OR FUTURE WEARING SURFACE.

FINISH GRADE ELEVATION SCHEDULE – SPAN 3											
LOCATION	0.0	0.1	0.2	0.3	0.4	0.5	0.6	0.7	0.8	0.9	1.0
GIRDER 1	662.72	662.95	663.17	663.40	663.62	663.84	664.07	664.29	664.52	664.74	664.97
GIRDER 2	662.78	663.01	663.23	663.46	663.68	663.90	664.13	664.35	664.58	664.80	665.02
GIRDER 3	662.84	663.07	663.29	663.51	663.74	663.96	664.19	664.41	664.63	664.86	665.08
GIRDER 4	662.90	663.12	663.35	663.57	663.80	664.02	664.24	664.47	664.69	664.92	665.14

FINISH GRADE ELEVATION SCHEDULE – SPAN 4											
LOCATION	0.0	0.1	0.2	0.3	0.4	0.5	0.6	0.7	0.8	0.9	1.0
GIRDER 1	665.01	665.23	665.46	665.68	665.91	666.13	666.35	666.58	666.80	667.03	667.25
GIRDER 2	665.07	665.29	665.52	665.74	665.96	666.19	666.41	666.64	666.86	667.09	667.31
GIRDER 3	665.13	665.35	665.57	665.80	666.02	666.25	666.47	666.70	666.92	667.14	667.37
GIRDER 4	665.19	665.41	665.63	665.86	666.08	666.31	666.53	666.75	666.98	667.20	667.43

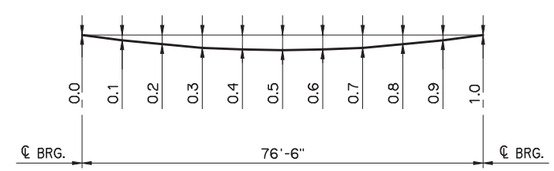

DEAD LOAD DEFLECTION DIAGRAM

DEAD LOAD DEFLECTION SCHEDULE (IN.) – SPANS 3 & 4											
LOCATION	0.0	0.1	0.2	0.3	0.4	0.5	0.6	0.7	0.8	0.9	1.0
GIRDERS 1 & 4											
STEEL	0.00"	0.17"	0.31"	0.41"	0.49"	0.52"	0.50"	0.43"	0.32"	0.17"	0.00"
CONCRETE	0.00"	0.80"	1.45"	1.95"	2.29"	2.44"	2.35"	2.02"	1.49"	0.80"	0.00"
TOTAL	0.00"	0.97"	1.76"	2.36"	2.78"	2.96"	2.85"	2.45"	1.81"	0.97"	0.00"
GIRDERS 2 & 3											
STEEL	0.00"	0.17"	0.31"	0.43"	0.50"	0.53"	0.50"	0.43"	0.31"	0.17"	0.00"
CONCRETE	0.00"	0.81"	1.51"	2.07"	2.42"	2.56"	2.44"	2.09"	1.52"	0.81"	0.00"
TOTAL	0.00"	0.98"	1.82"	2.50"	2.92"	3.09"	2.94"	2.52"	1.83"	0.98"	0.00"

I-44 E.B. TO U.S.169 N.B. RAMP D — TULSA COUNTY

SUPERSTRUCTURE DETAILS

SHEET 6 OF 21

GIRDER DETAILS SPAN NOS. 3 & 4

Design	AFW	
Detail	DRB	
Check	AFW	

WHITE ENGINEERING ASSOCIATES

STATE OF OKLAHOMA — DEPARTMENT OF TRANSPORTATION

JOB PIECE NO. 10981(05) — SHEET NO. B031

I:\Active\1611\Drawings\B031 SS6 girder span 3-4.dwg, 11/2/2020 1:24:11 PM, Deanne

REVISIONS		
REV. NO.	DESCRIPTION	DATE

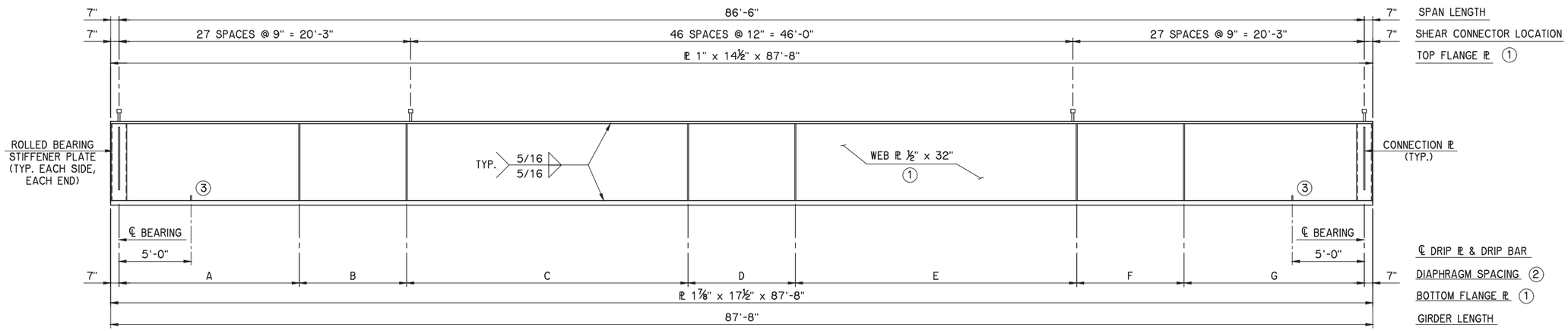

ELEVATION

SPANS 5 - 8

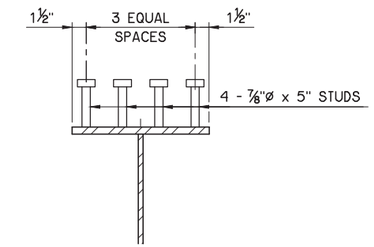

SHEAR CONNECTOR DETAIL

PLATE GIRDER DIMENSION SCHEDULE – SPANS 5 THRU 8							
LOCATION	A	B	C	D	E	F	G
GIRDER 1	19'-11¾"		27'-0"		27'-0"		12'-6¼"
GIRDER 2	12'-6¼"	7'-5½"	19'-6½"	7'-5½"	19'-6½"	7'-5½"	12'-6¼"
GIRDER 3	12'-6¼"	7'-5½"	19'-6½"	7'-5½"	19'-6½"	7'-5½"	12'-6¼"
GIRDER 4	12'-6¼"		27'-0"		27'-0"		19'-11¾"

FINISH GRADE ELEVATION SCHEDULE – SPAN 5											
LOCATION	0.0	0.1	0.2	0.3	0.4	0.5	0.6	0.7	0.8	0.9	1.0
GIRDER 1	667.29	667.55	667.80	668.06	668.31	668.56	668.82	669.07	669.32	669.58	669.83
GIRDER 2	667.35	667.61	667.86	668.11	668.37	668.62	668.87	669.13	669.38	669.63	669.89
GIRDER 3	667.41	667.67	667.92	668.17	668.43	668.68	668.93	669.19	669.44	669.69	669.95
GIRDER 4	667.47	667.72	667.98	668.23	668.48	668.74	668.99	669.24	669.50	669.75	670.00

FINISH GRADE ELEVATION SCHEDULE – SPAN 6											
LOCATION	0.0	0.1	0.2	0.3	0.4	0.5	0.6	0.7	0.8	0.9	1.0
GIRDER 1	669.87	670.13	670.38	670.63	670.89	671.14	671.39	671.65	671.90	672.15	672.41
GIRDER 2	669.93	670.18	670.44	670.69	670.95	671.20	671.45	671.71	671.96	672.21	672.47
GIRDER 3	669.99	670.24	670.50	670.75	671.00	671.26	671.51	671.76	672.02	672.27	672.52
GIRDER 4	670.05	670.30	670.56	670.81	671.06	671.32	671.57	671.82	672.08	672.33	672.58

FINISH GRADE ELEVATION SCHEDULE – SPAN 7											
LOCATION	0.0	0.1	0.2	0.3	0.4	0.5	0.6	0.7	0.8	0.9	1.0
GIRDER 1	672.45	672.70	672.96	673.21	673.44	673.67	673.88	674.07	674.25	674.36	674.45
GIRDER 2	672.51	672.76	673.01	673.25	673.48	673.69	673.89	674.07	674.22	674.35	674.47
GIRDER 3	672.57	672.82	673.06	673.29	673.50	673.70	673.89	674.07	674.23	674.39	674.53
GIRDER 4	672.63	672.87	673.09	673.31	673.51	673.70	673.91	674.11	674.30	674.47	674.64

FINISH GRADE ELEVATION SCHEDULE – SPAN 8											
LOCATION	0.0	0.1	0.2	0.3	0.4	0.5	0.6	0.7	0.8	0.9	1.0
GIRDER 1	674.47	674.55	674.62	674.67	674.72	674.75	674.77	674.77	674.76	674.74	674.71
GIRDER 2	674.49	674.59	674.68	674.76	674.82	674.88	674.92	674.94	674.96	674.96	674.95
GIRDER 3	674.55	674.68	674.79	674.89	674.98	675.05	675.12	675.17	675.20	675.23	675.24
GIRDER 4	674.66	674.81	674.95	675.07	675.18	675.28	675.37	675.44	675.50	675.55	675.58

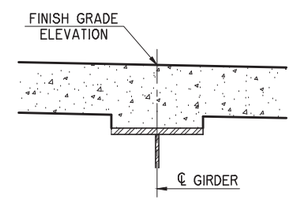

FINISH GRADE ELEVATION DIAGRAM

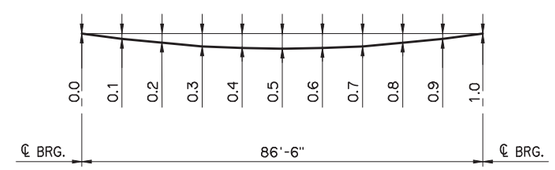

DEAD LOAD DEFLECTION DIAGRAM

NOTES:

① PROVIDE STRUCTURAL STEEL TESTED FOR NON-FRACTURE CRITICAL CHARPY V-NOTCH REQUIREMENTS FOR ZONE 2.

SEE GENERAL NOTES FOR MATERIAL AND FABRICATION REQUIREMENTS.

② ALL DIAPHRAGM CONNECTION PLATES ARE ½" x 7". SEE SHEET B036 FOR PLATE DETAILS AND ADDITIONAL GIRDER DETAILS.

③ DRIP PLATE & DRIP BAR ON GIRDERS 1 & 4 ONLY. SEE SHEET B027 FOR DETAILS.

THE STEEL DEFLECTIONS SHOWN AT THE TENTH POINTS ARE DUE TO THE STEEL WEIGHT OF THE GIRDER AND DIAPHRAGMS.

THE CONCRETE DEFLECTIONS SHOWN AT THE TENTH POINTS ARE DEFLECTIONS DUE TO DECK SLAB + HAUNCH + CONCRETE PARAPET. IT DOES NOT INCLUDE THE GIRDER WEIGHT, DIAPHRAGMS OR FUTURE WEARING SURFACE.

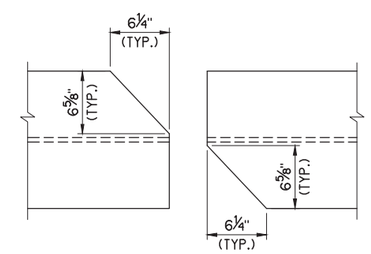

SPAN NO. 5 & 8 SPAN NO. 6

TOP FLANGE CLIP DETAIL

AT PIER NO. 5 & PIER NO. 8 (SPAN 8)

DEAD LOAD DEFLECTION SCHEDULE (IN.) – SPANS 5 THRU 8											
LOCATION	0.0	0.1	0.2	0.3	0.4	0.5	0.6	0.7	0.8	0.9	1.0
GIRDERS 1 & 4											
STEEL	0.00"	0.26"	0.48"	0.64"	0.75"	0.80"	0.77"	0.66"	0.49"	0.26"	0.00"
CONCRETE	0.00"	0.97"	1.75"	2.35"	2.75"	2.94"	2.82"	2.43"	1.78"	0.97"	0.00"
TOTAL	0.00"	1.23"	2.23"	2.99"	3.50"	3.74"	3.59"	3.09"	2.27"	1.23"	0.00"
GIRDERS 2 & 3											
STEEL	0.00"	0.26"	0.48"	0.65"	0.76"	0.80"	0.77"	0.66"	0.48"	0.26"	0.00"
CONCRETE	0.00"	0.97"	1.81"	2.47"	2.90"	3.06"	2.92"	2.50"	1.82"	0.97"	0.00"
TOTAL	0.00"	1.23"	2.29"	3.12"	3.66"	3.86"	3.69"	3.16"	2.30"	1.23"	0.00"

I-44 E.B. TO U.S.169 N.B. RAMP D — TULSA COUNTY

SUPERSTRUCTURE DETAILS
SHEET 7 OF 21
GIRDER DETAILS SPAN NOS. 5 - 8

Design	AFW	
Detail	DRB	
Check	AFW	

WHITE ENGINEERING ASSOCIATES

STATE OF OKLAHOMA — DEPARTMENT OF TRANSPORTATION

JOB PIECE NO. 10981(05) — SHEET NO. B032

I:\Active\16111\Drawings\B032 SS7 girder span 5-8.dwg, 11/2/2020 1:24:33 PM, Deanne

REVISIONS		
REV. NO.	DESCRIPTION	DATE

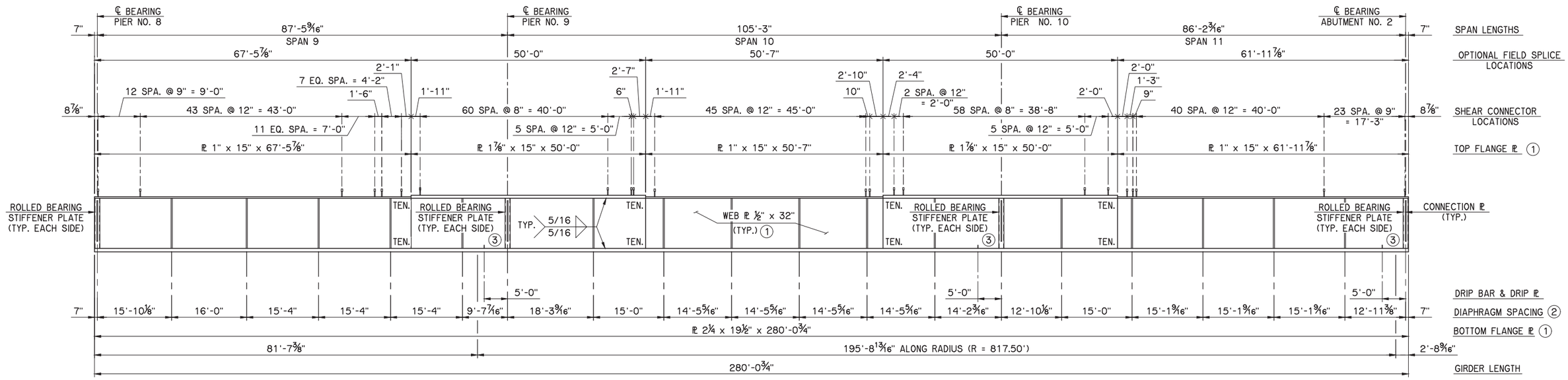

GIRDER 1 ELEVATION

SPANS 9 -11

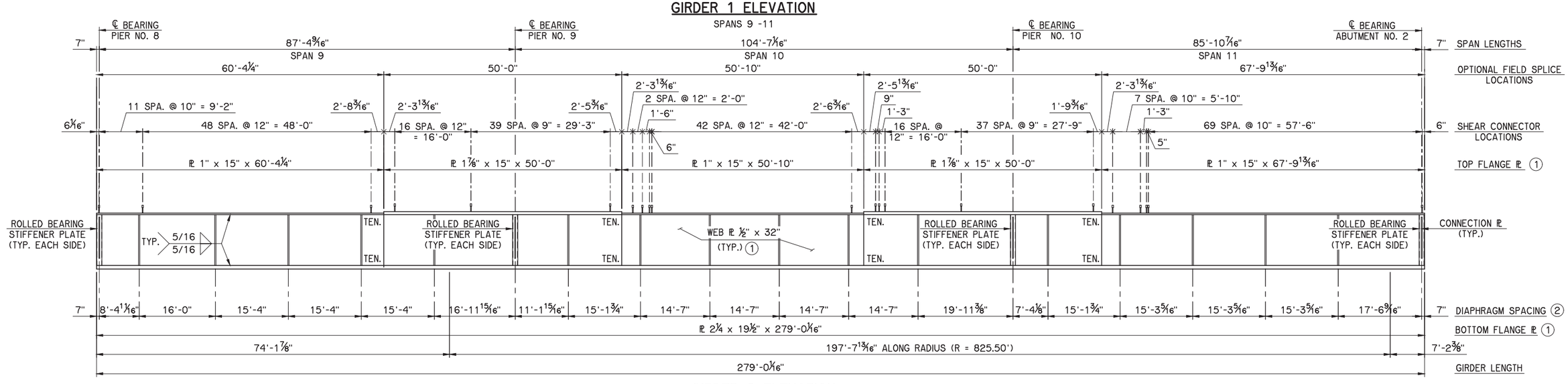

GIRDER 2 ELEVATION

SPANS 9 -11

NOTES:

(1) PROVIDE STRUCTURAL STEEL TESTED FOR NON-FRACTURE CRITICAL CHARPY V-NOTCH REQUIREMENTS FOR ZONE 2.

SEE GENERAL NOTES FOR MATERIAL AND FABRICATION REQUIREMENTS.

(2) ALL DIAPHRAGM CONNECTION PLATES ARE 1/2" x 7". SEE SHEET B036 FOR PLATE DETAILS AND ADDITIONAL GIRDER DETAILS.

(3) FOR DRIP PLATE & DRIP BAR DETAILS, SEE SHEET B027.

CONTRACTOR MAY ELECT TO OMIT ANY FIELD SPLICE. PLAN QUANTITY FOR STRUCTURAL STEEL INCLUDES TWO FIELD SPLICES PER GIRDER. SEE SHEET B036 FOR FIELD SPLICE DETAILS.

SEE SHEET B035 FOR SHEAR CONNECTOR DETAIL.

I-44 E.B. TO U.S.169 N.B. RAMP D — TULSA COUNTY

SUPERSTRUCTURE DETAILS

SHEET 8 OF 21

GIRDER DETAILS SPAN NOS. 9 - 11

Design	AFW	
Detail	DRB	
Check	AFW	

WHITE ENGINEERING ASSOCIATES

STATE OF OKLAHOMA — DEPARTMENT OF TRANSPORTATION

JOB PIECE NO. 10981(05) — SHEET NO. B033

I:\Active\16111\Drawings\B033 SS8 girder span 9-11.dwg, 11/2/2020 1:24:55 PM, Deanne

REVISIONS		
REV. NO.	DESCRIPTION	DATE

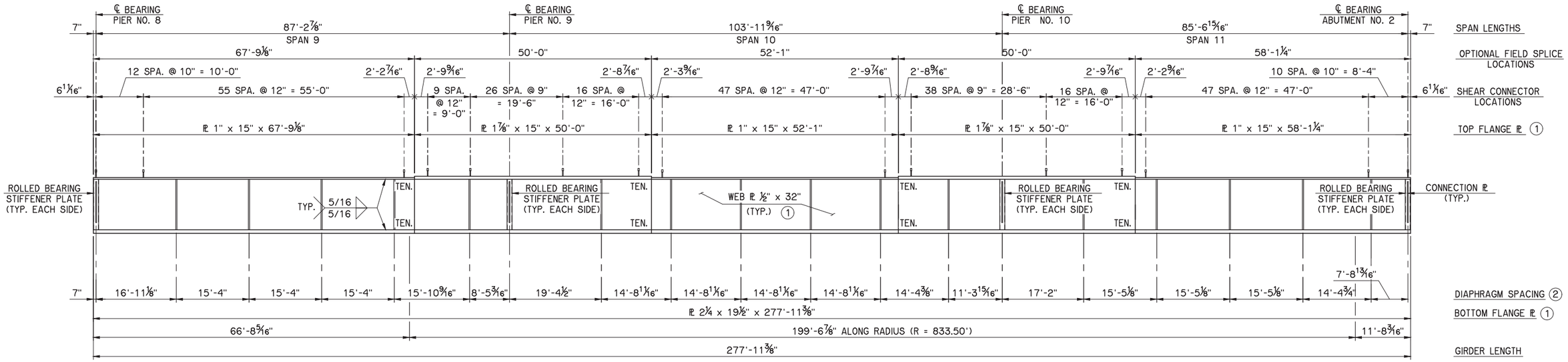

GIRDER 3 ELEVATION

SPANS 9 -11

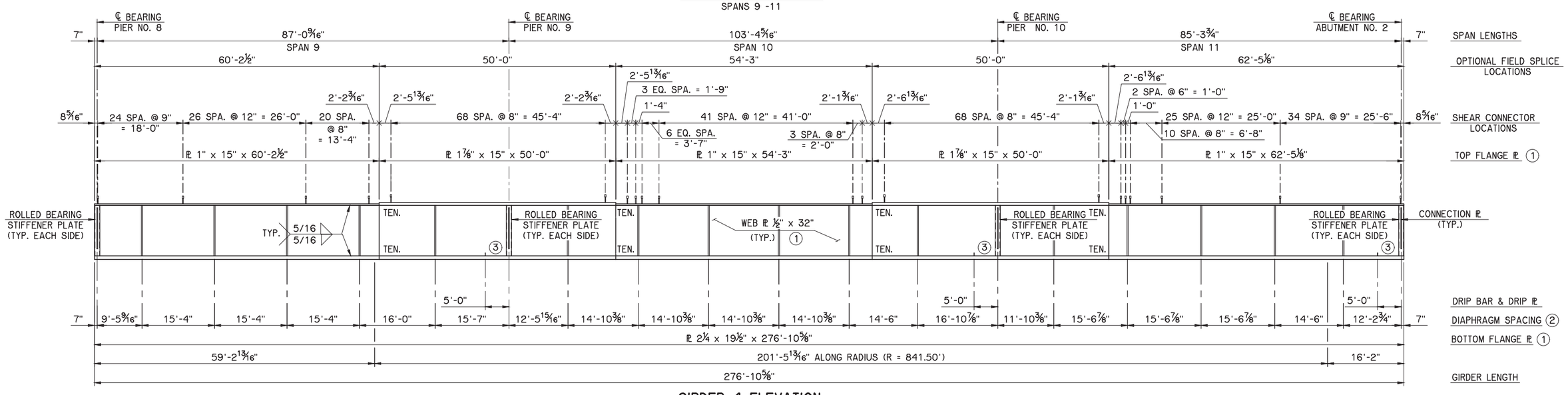

GIRDER 4 ELEVATION

SPANS 9 -11

NOTES:

(1) PROVIDE STRUCTURAL STEEL TESTED FOR NON-FRACTURE CRITICAL CHARPY V-NOTCH REQUIREMENTS FOR ZONE 2.

SEE GENERAL NOTES FOR MATERIAL AND FABRICATION REQUIREMENTS.

(2) ALL DIAPHRAGM CONNECTION PLATES ARE ½" x 7". SEE SHEET B036 FOR PLATE DETAILS AND ADDITIONAL GIRDER DETAILS.

(3) FOR DRIP PLATE & DRIP BAR DETAILS, SEE SHEET B027.

CONTRACTOR MAY ELECT TO OMIT ANY FIELD SPLICE. PLAN QUANTITY FOR STRUCTURAL STEEL INCLUDES TWO FIELD SPLICES PER GIRDER. SEE SHEET B036 FOR FIELD SPLICE DETAILS.

SEE SHEET B035 FOR SHEAR CONNECTOR DETAIL.

I-44 E.B. TO U.S.169 N.B. RAMP D — TULSA COUNTY

SUPERSTRUCTURE DETAILS

SHEET 9 OF 21

GIRDER DETAILS SPAN NOS. 9 - 11

Design	AFW	
Detail	DRB	
Check	AFW	

WHITE ENGINEERING ASSOCIATES

STATE OF OKLAHOMA — DEPARTMENT OF TRANSPORTATION

JOB PIECE NO. 10981(05) — SHEET NO. B034

I:\Active\16111\Drawings\B034 SS9 girder span 9-11.dwg, 11/2/2020 1:25:17 PM, Deanne

REVISIONS		
REV. NO.	DESCRIPTION	DATE

DEAD LOAD DEFLECTION SCHEDULE (IN.)

LOCATION	0.0	0.1	0.2	0.3	0.4	0.5	0.6	0.7	0.8	0.9	1.0	1.1	1.2	1.3	1.4	1.5	1.6	1.7	1.8	1.9	2.0	2.1	2.2	2.3	2.4	2.5	2.6	2.7	2.8	2.9	3.0
GIRDER 1																															
STEEL	0.00"	0.14"	0.25"	0.33"	0.37"	0.36"	0.31"	0.22"	0.13"	0.05"	0.00"	0.01"	0.09"	0.17"	0.24"	0.27"	0.26"	0.20"	0.12"	0.04"	0.00"	0.03"	0.09"	0.17"	0.24"	0.29"	0.31"	0.28"	0.22"	0.12"	0.00"
CONCRETE	0.00"	0.44"	0.78"	1.01"	1.14"	1.10"	0.94"	0.68"	0.41"	0.14"	0.00"	0.03"	0.26"	0.50"	0.71"	0.80"	0.75"	0.57"	0.33"	0.10"	0.00"	0.09"	0.29	0.53"	0.74"	0.91"	0.95"	0.87"	0.67"	0.37"	0.00"
TOTAL	0.00"	0.58"	1.03"	1.34"	1.51"	1.46"	1.25"	0.90"	0.54"	0.19"	0.00"	0.04"	0.35"	0.67"	0.95"	1.07"	1.01"	0.77"	0.45"	0.14"	0.00"	0.12"	0.38"	0.70"	0.98"	1.20"	1.26"	1.15"	0.89"	0.49"	0.00"
GIRDER 2																															
STEEL	0.00"	0.13"	0.23"	0.31"	0.34"	0.33"	0.28"	0.20"	0.11"	0.05"	0.00"	0.02"	0.09"	0.18"	0.25"	0.27"	0.25"	0.19"	0.10"	0.04"	0.00"	0.03"	0.10"	0.18"	0.25"	0.31"	0.32"	0.29"	0.23"	0.13"	0.00"
CONCRETE	0.00"	0.41"	0.74"	0.98"	1.07"	1.04"	0.87"	0.64"	0.36"	0.15"	0.00"	0.07"	0.27"	0.52"	0.73"	0.81"	0.75"	0.56"	0.30"	0.12"	0.00"	0.11"	0.31"	0.57"	0.79"	0.95"	1.00"	0.92"	0.70"	0.40"	0.00"
TOTAL	0.00"	0.54"	0.97"	1.29"	1.41"	1.37"	1.15"	0.84"	0.47"	0.20"	0.00"	0.09"	0.36"	0.70"	0.98"	1.08"	1.00"	0.75"	0.40"	0.16"	0.00"	0.14"	0.41"	0.75"	1.04"	1.26"	1.32"	1.21"	0.93"	0.53"	0.00"
GIRDER 3																															
STEEL	0.00"	0.13"	0.23"	0.30"	0.33"	0.32"	0.27"	0.19"	0.11"	0.04"	0.00"	0.02"	0.10"	0.18"	0.25"	0.27"	0.25"	0.18"	0.10"	0.02"	0.00"	0.03"	0.11"	0.19"	0.27"	0.32"	0.34"	0.31"	0.24"	0.13"	0.00"
CONCRETE	0.00"	0.41"	0.73"	0.94"	1.05"	1.01"	0.85"	0.61"	0.36"	0.12"	0.00"	0.05"	0.29"	0.52"	0.72"	0.80"	0.73"	0.54"	0.29"	0.06"	0.00"	0.10"	0.35"	0.58"	0.84"	0.98"	1.04"	0.95"	0.73"	0.40"	0.00"
TOTAL	0.00"	0.54"	0.96"	1.24"	1.38"	1.33"	1.12"	0.80"	0.47"	0.16"	0.00"	0.07"	0.39"	0.70"	0.97"	1.07"	0.98"	0.72"	0.39"	0.08"	0.00"	0.13"	0.46"	0.77"	1.11"	1.30"	1.38"	1.26"	0.97"	0.53"	0.00"
GIRDER 4																															
STEEL	0.00"	0.13"	0.23"	0.31"	0.33"	0.32"	0.26"	0.19"	0.10"	0.04"	0.00"	0.03"	0.10"	0.19"	0.25"	0.27"	0.25"	0.17"	0.09"	0.03"	0.00"	0.04"	0.12"	0.21"	0.29"	0.35"	0.36"	0.33"	0.25"	0.14"	0.00"
CONCRETE	0.00"	0.40"	0.73"	0.96"	1.05"	1.01"	0.85"	0.61"	0.34"	0.13"	0.00"	0.07"	0.27"	0.53"	0.72"	0.79"	0.72"	0.51"	0.27"	0.08"	0.00"	0.13"	0.35"	0.63"	0.87"	1.05"	1.08"	0.99"	0.76"	0.42"	0.00"
TOTAL	0.00"	0.53"	0.96"	1.27"	1.38"	1.33"	1.11"	0.80"	0.44"	0.17"	0.00"	0.10"	0.37"	0.72"	0.97"	1.06"	0.97"	0.68"	0.36"	0.11"	0.00"	0.17"	0.47"	0.84"	1.16"	1.40"	1.44"	1.32"	1.01"	0.56"	0.00"

NOTES:

THE STEEL DEFLECTIONS SHOWN AT THE TENTH POINTS ARE DUE TO THE STEEL WEIGHT OF THE GIRDER AND DIAPHRAGM.

THE CONCRETE DEFLECTIONS SHOWN AT THE TENTH POINTS ARE DEFLECTIONS DUE TO DECK SLAB + S.I.P. STEEL DECK FORM ALLOWANCE + HAUNCH + CONCRETE PARAPET. IT DOES NOT INCLUDE THE GIRDER WEIGHT, DIAPHRAGMS OR FUTURE WEARING SURFACE.

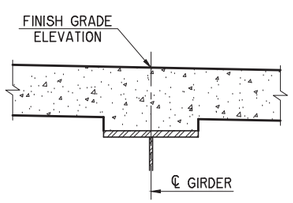

FINISH GRADE ELEVATION DIAGRAM

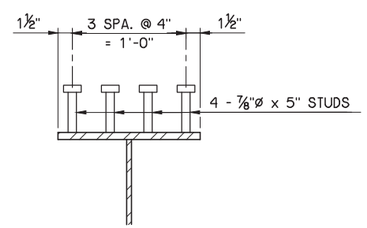

SHEAR CONNECTOR DETAIL

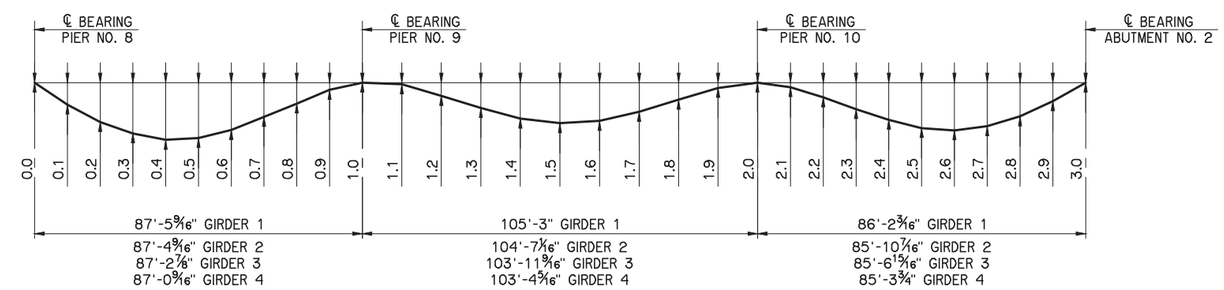

DEAD LOAD DEFLECTION DIAGRAM

FINISH GRADE ELEVATION SCHEDULE – SPANS 9, 10 & 11

LOCATION	0.0	0.1	0.2	0.3	0.4	0.5	0.6	0.7	0.8	0.9	1.0	1.1	1.2	1.3	1.4	1.5	1.6	1.7	1.8	1.9	2.0	2.1	2.2	2.3	2.4	2.5	2.6	2.7	2.8	2.9	3.0
GIRDER 1	674.70	674.66	674.59	674.52	674.43	674.35	674.31	674.25	674.17	674.09	673.99	673.85	673.69	673.51	673.32	673.10	672.86	672.61	672.33	672.04	671.73	671.46	671.17	670.88	670.57	670.25	669.98	669.70	669.41	669.10	668.77
GIRDER 2	674.95	674.92	674.89	674.83	674.78	674.73	674.67	674.60	674.52	674.42	674.31	674.16	673.99	673.81	673.60	673.37	673.13	672.87	672.59	672.29	671.97	671.70	671.41	671.11	670.79	670.49	670.18	669.86	669.53	669.19	668.83
GIRDER 3	675.24	675.24	675.23	675.20	675.15	675.10	675.03	674.95	674.85	674.75	674.63	674.47	674.29	674.09	673.88	673.65	673.40	673.13	672.84	672.53	672.21	671.93	671.64	671.34	671.02	670.69	670.34	669.99	669.62	669.24	668.85
GIRDER 4	675.58	675.60	675.61	675.58	675.52	675.46	675.38	675.29	675.18	675.07	674.94	674.77	674.58	674.38	674.15	673.92	673.66	673.38	673.09	672.78	672.45	672.17	671.87	671.56	671.21	670.84	670.46	670.07	669.67	669.25	668.82

I-44 E.B. TO U.S.169 N.B. RAMP D — TULSA COUNTY

SUPERSTRUCTURE DETAILS

SHEET 10 OF 21

GIRDER DETAILS SPAN NOS. 9 - 11

Design	AFW	
Detail	DRB	
Check	AFW	

WHITE ENGINEERING ASSOCIATES

STATE OF OKLAHOMA — DEPARTMENT OF TRANSPORTATION

JOB PIECE NO. 10981(05) — SHEET NO. B035

I:\Active\1611\Drawings\B035 SS10 girder span 9-11.dwg, 11/2/2020 1:27:28 PM, Deanne

REVISIONS		
REV. NO.	DESCRIPTION	DATE

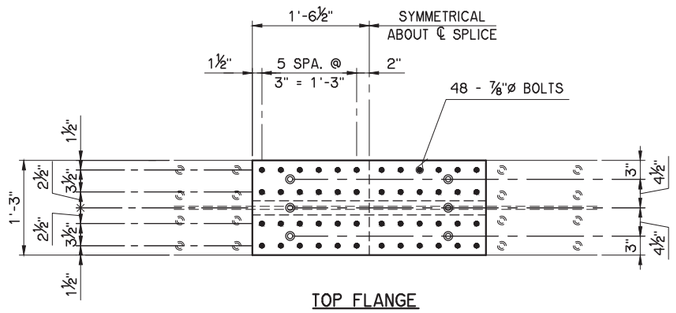

TOP FLANGE

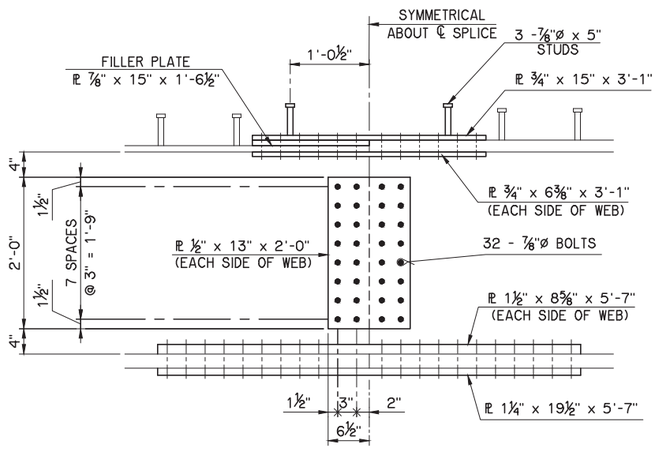

ELEVATION

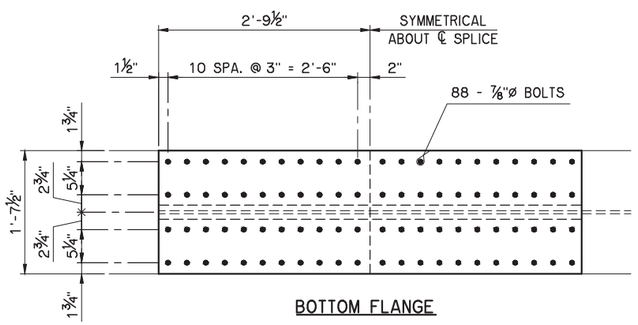

BOTTOM FLANGE

BOLTED FIELD SPLICE DETAILS

(168 - ⅞"ø BOLTS AND 6 - ⅞"ø x 5" STUDS REQUIRED AT EACH FIELD SPLICE)

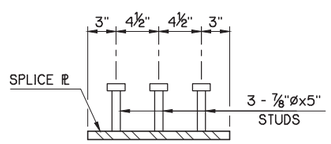

SPLICE ℞ SHEAR CONNECTOR DETAIL

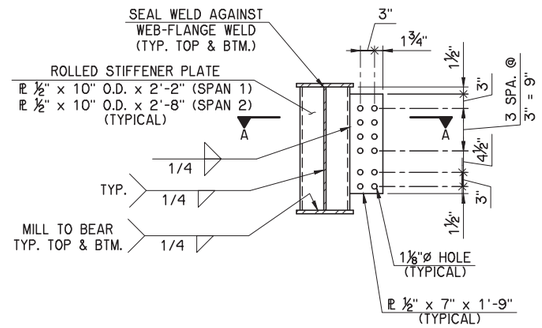

SPAN 1
SPAN 2 SIMILAR

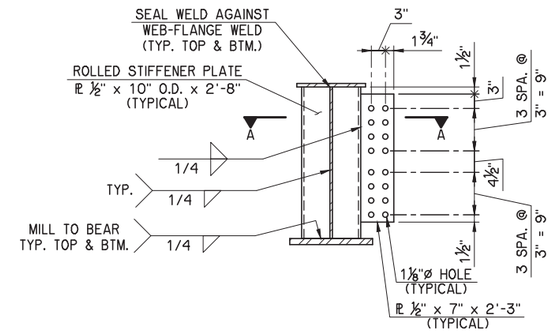

SPANS 3 - 8

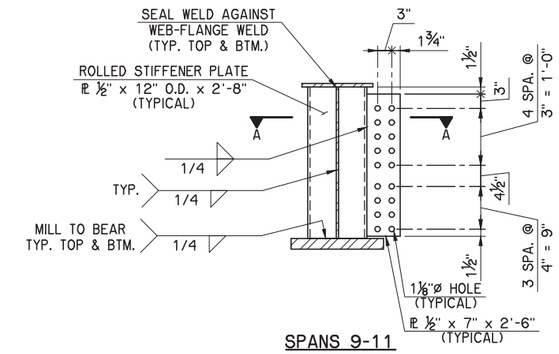

SPANS 9-11

BEARING STIFFENER & END DIAPHRAGM CONNECTION PLATES

(EXTERIOR SHOWN, INTERIOR SIMILAR)
OMIT CONNECTION PLATE ON OUTSIDE FACE OF EXTERIOR GIRDERS

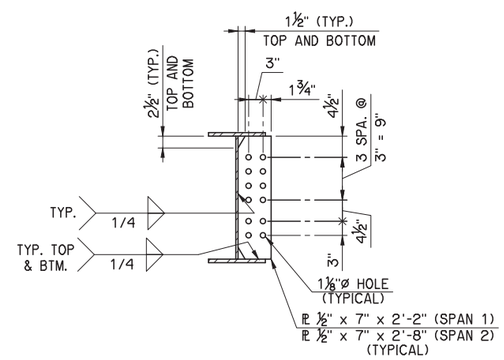

SPAN 1
SPAN 2 SIMILAR

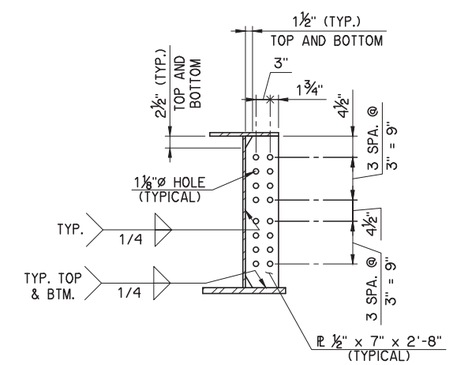

SPANS 3 - 8

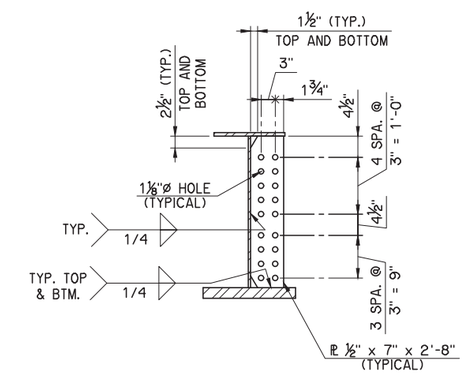

SPANS 9 - 11

INTERMEDIATE DIAPHRAGM CONNECTION PLATES

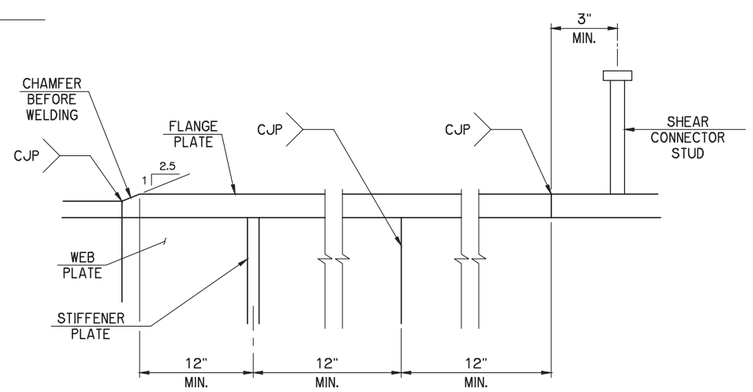

SHOP SPLICE DETAIL

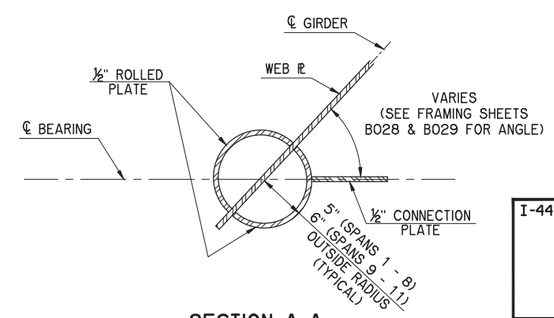

SECTION A-A

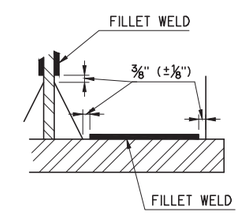

WELD TERMINATION DETAILS

I-44 E.B. TO U.S.169 N.B. RAMP D	TULSA COUNTY	Design	AFW
SUPERSTRUCTURE DETAILS SHEET 11 OF 21 GIRDER DETAILS		Detail	DRB
		Check	AFW
		WHITE ENGINEERING ASSOCIATES	
STATE OF OKLAHOMA	DEPARTMENT OF TRANSPORTATION		
JOB PIECE NO. 10981(05)		SHEET NO. B036	

I:\Active\1611\Drawings\B036 SS11 girder details.dwg, 11/2/2020 1:27:54 PM, Deanne

REVISIONS		
REV. NO.	DESCRIPTION	DATE

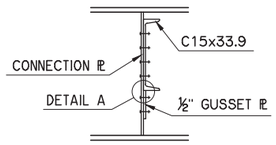

SECTION B-B

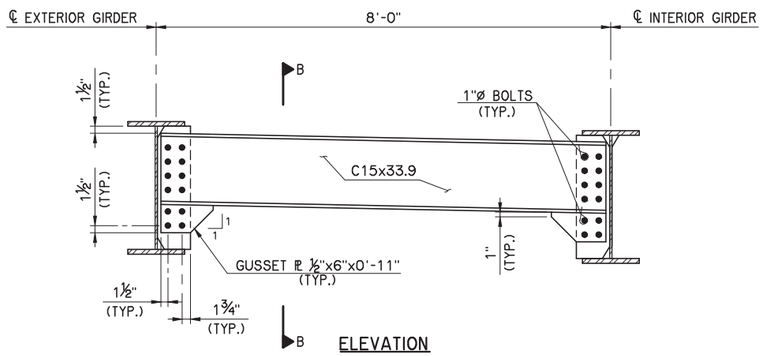

ELEVATION
(SPANS 1 & 2)

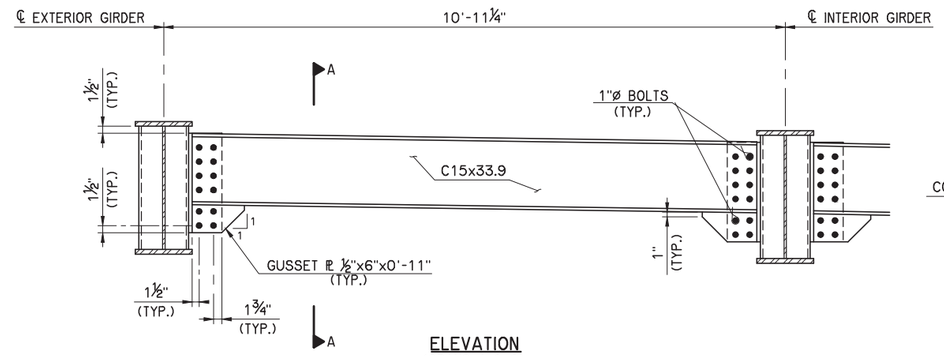

ELEVATION
(SPANS 1 & 2)

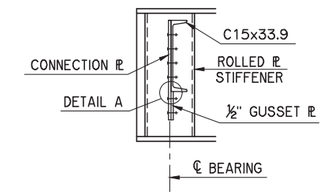

SECTION A-A

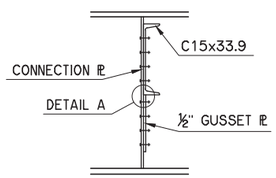

SECTION D-D

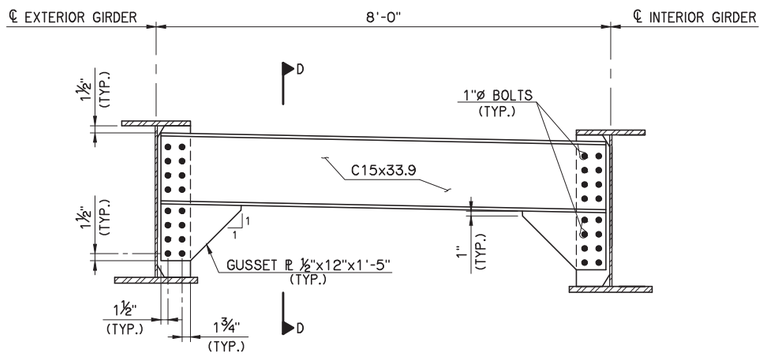

ELEVATION
(SPANS 3 - 8)

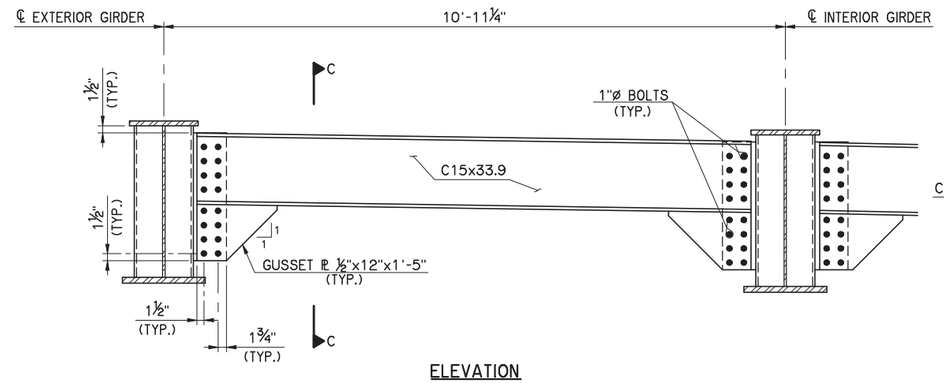

ELEVATION
(SPANS 3 - 8)

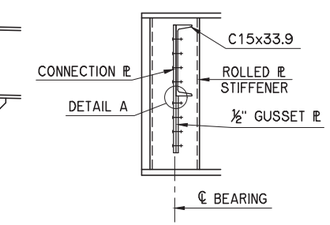

SECTION C-C

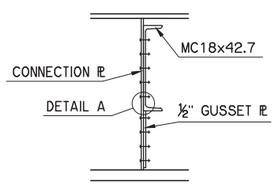

SECTION F-F

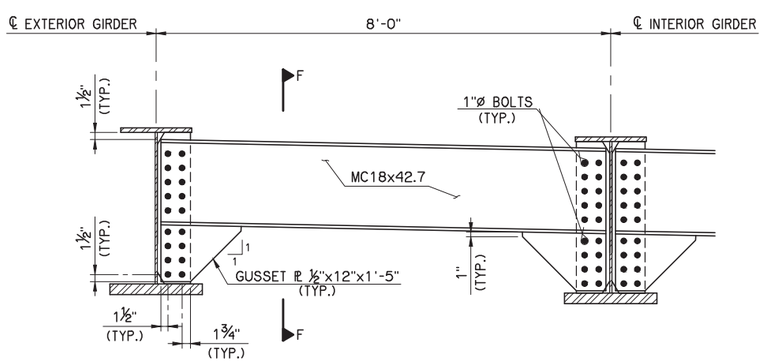

ELEVATION
(SPANS 9 - 11)

INTERMEDIATE DIAPHRAGMS

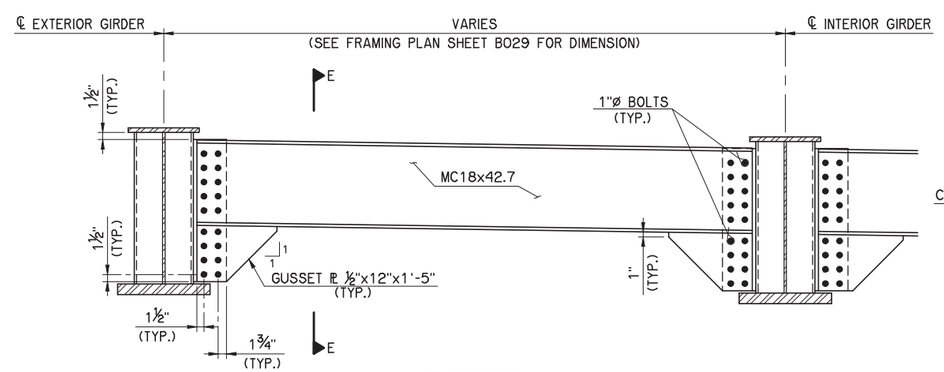

ELEVATION
(SPANS 9 - 11)

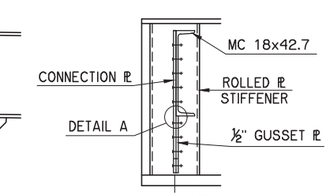

SECTION E-E

END DIAPHRAGMS

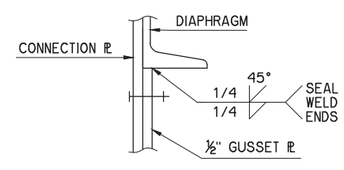

DETAIL A

I-44 E.B. TO U.S.169 N.B. RAMP D	TULSA COUNTY	Design	AFW	
SUPERSTRUCTURE DETAILS SHEET 12 OF 21 GIRDER DETAILS		Detail	DRB	
		Check	AFW	
		WHITE ENGINEERING ASSOCIATES		
STATE OF OKLAHOMA	DEPARTMENT OF TRANSPORTATION			
	JOB PIECE NO. 10981(05)		SHEET NO. B037	

I:\Active\16111\Drawings\B037 SS12 Diaphragms.dwg, 11/2/2020 1:28:20 PM, Deanne

REVISIONS		
REV. NO.	DESCRIPTION	DATE

NOTE:
BEARING STIFFENER CONNECTION PLATES NOT SHOWN FOR CLARITY.

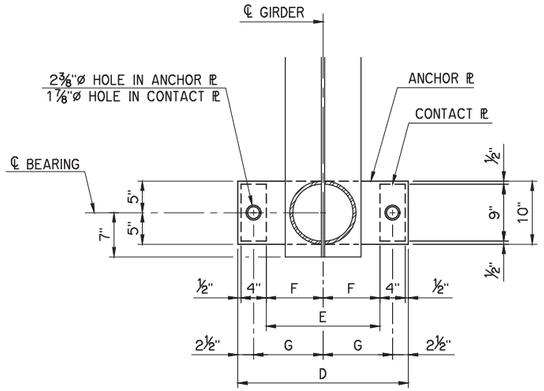

FIXED BEARING PLAN
ABUTMENT NO. 1
PIER NOS. 3 & 7

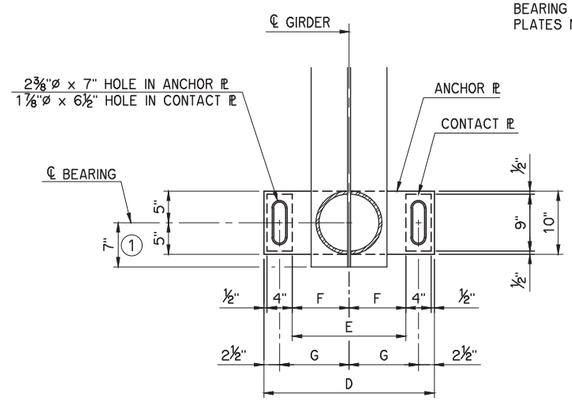

EXPANSION BEARING PLAN
PIER NOS. 1, 2, 4, 5 & 6
PIER NO. 8 (SPAN 8)

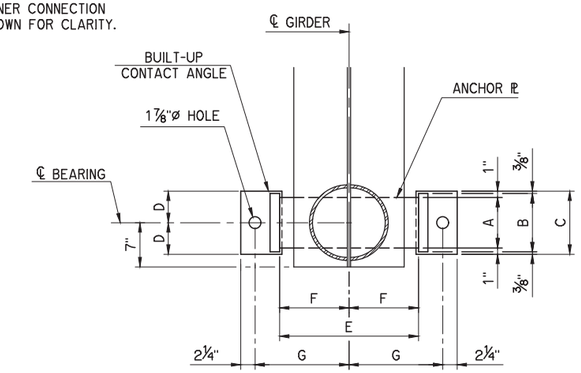

FIXED BEARING PLAN
ABUTMENT NO. 2

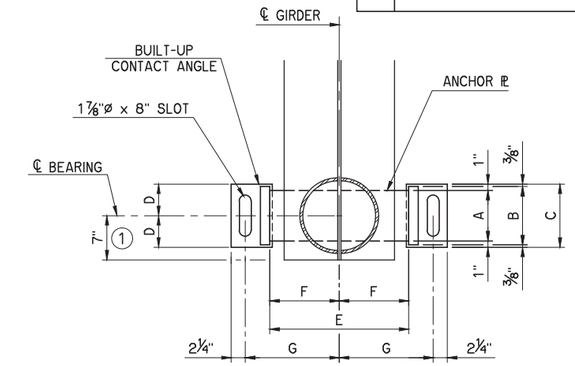

EXPANSION BEARING PLAN
PIER NO. 8 (SPAN 9)
PIER NOS. 9 & 10

1 CENTER ANCHOR BOLTS IN SLOTS DURING SETTING OF GIRDERS. DIMENSIONS MAY VARY DEPENDING ON TEMPERATURE AT THE TIME OF BEAM SETTING.

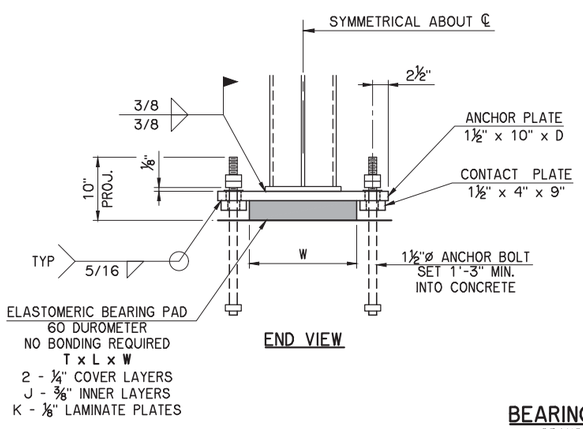

END VIEW

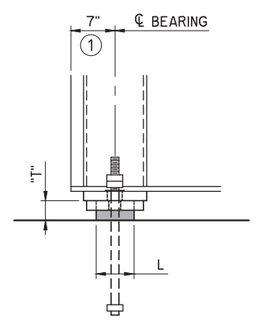

SIDE VIEW

BEARING DETAILS
SPANS 1 THRU 8

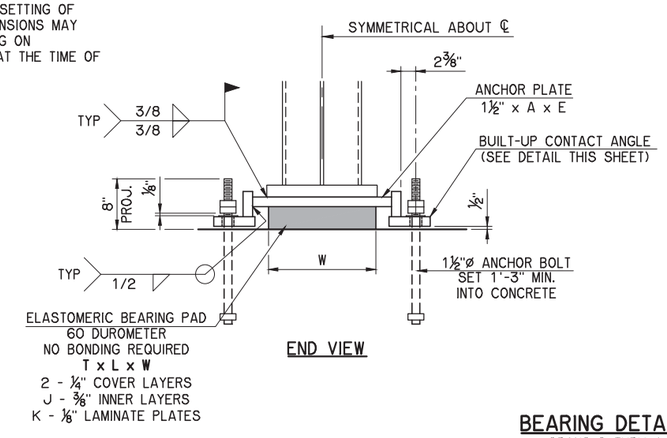

END VIEW

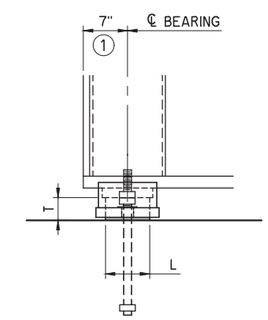

SIDE VIEW

BEARING DETAILS
SPANS 9 THRU 11

NOTE:
PAINT THICKEST EDGE RED. PLACE PAINTED EDGE TOWARD PIER NO. 8

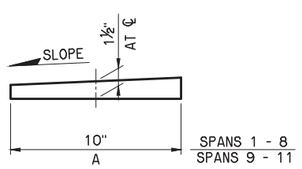

BEVELED ANCHOR PLATE DETAIL

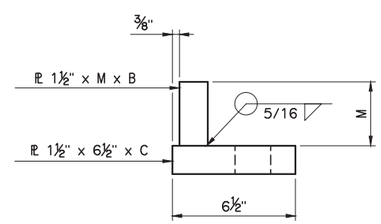

BUILT-UP CONTACT ANGLE DETAIL

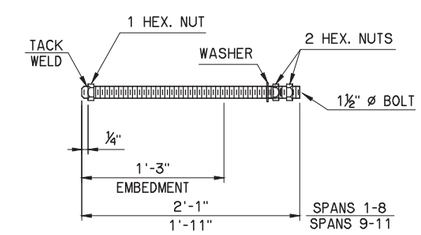

ANCHOR BOLT DETAIL

BEVELED ANCHOR ℙ SCHEDULE	
LOCATION	BEVEL SLOPE
ABUTMENT NO. 1	2.93%
PIER NOS. 1 - 6	2.93%
PIER NO. 7	1.40%
PIER NO. 8	NO BEVEL
PIER NO. 9	1.40%
PIER NO. 10	3.15%
ABUTMENT NO. 2	4.43%

BEARING SCHEDULE

LOCATION	BEARING PAD SIZE			DIMENSIONS										
	T	L	W	A	B	C	D	E	F	G	J	K	M
SPAN 1	3⅛"	6"	1'-5"				2'-3"	1'-6"	9"	11"	5	6	
SPAN 2	3⅛"	6"	1'-5"				2'-3"	1'-6"	9"	11"	5	6	
SPANS 3 - 8	3⅝"	7"	1'-7"				2'-5"	1'-8"	10"	1'-0"	6	7	
SPAN 9 (PIER NO. 8)	5⅝"	6"	1'-7½"	9"	10¼"	11"	5½"	1'-10½"	11¼"	1'-3⅛"	10	11	5¾"
PIER NO. 9	4⅝"	10"	1'-7½"	11"	1'-0¼"	1'-1"	6½"	1'-11"	11½"	1'-3⅜"	8	9	4¾"
PIER NO. 10	3⅝"	10"	1'-7½"	11"	1'-0¼"	1'-1"	6½"	1'-11"	11½"	1'-3⅜"	6	7	3¾"
ABUT. NO. 2	3⅝"	6"	1'-7½"	7"	8¼"	9"	4½"	1'-10½"	11¼"	1'-3⅛"	6	7	3¾"

I-44 E.B. TO U.S.169 N.B. RAMP D — TULSA COUNTY

SUPERSTRUCTURE DETAILS
SHEET 13 OF 21
BEARING DETAILS

Design	AFW	
Detail	DRB	
Check	AFW	

WHITE ENGINEERING ASSOCIATES

STATE OF OKLAHOMA — DEPARTMENT OF TRANSPORTATION
JOB PIECE NO. 10981(05) — SHEET NO. B038

I:\Active\1611\Drawings\B038 SS13 Bearings.dwg, 11/2/2020 1:28:43 PM, Deanne

NOTES:
ALL LONGITUDINAL DIMENSIONS ARE ALONG INSIDE FACE OF PARAPET.

FOR EXPANSION JOINT SETTING SCHEDULE, SEE SHEET B027.

FOR ADDITIONAL SLAB REINFORCING AT END DIAPHRAGMS, SEE SHEET B042.

FOR SECTIONS A THRU E, SEE SHEET B043.

FOR BAR LIST AND BAR BENDS, SEE SHEET B044.

FOR PARAPET ELEVATION WITH DRAINAGE OPENINGS, SEE SHEET B045.

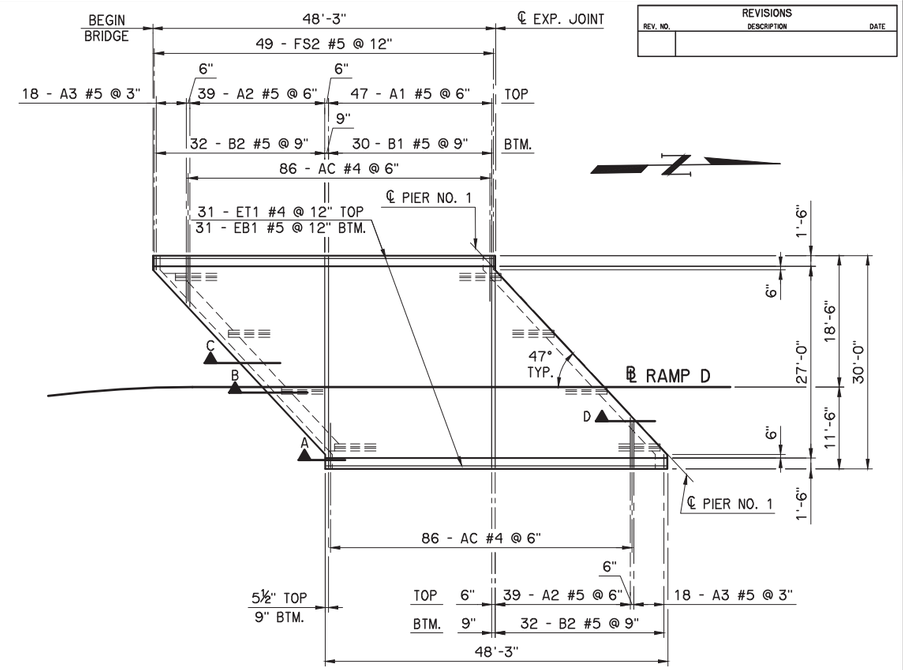

SPAN 1

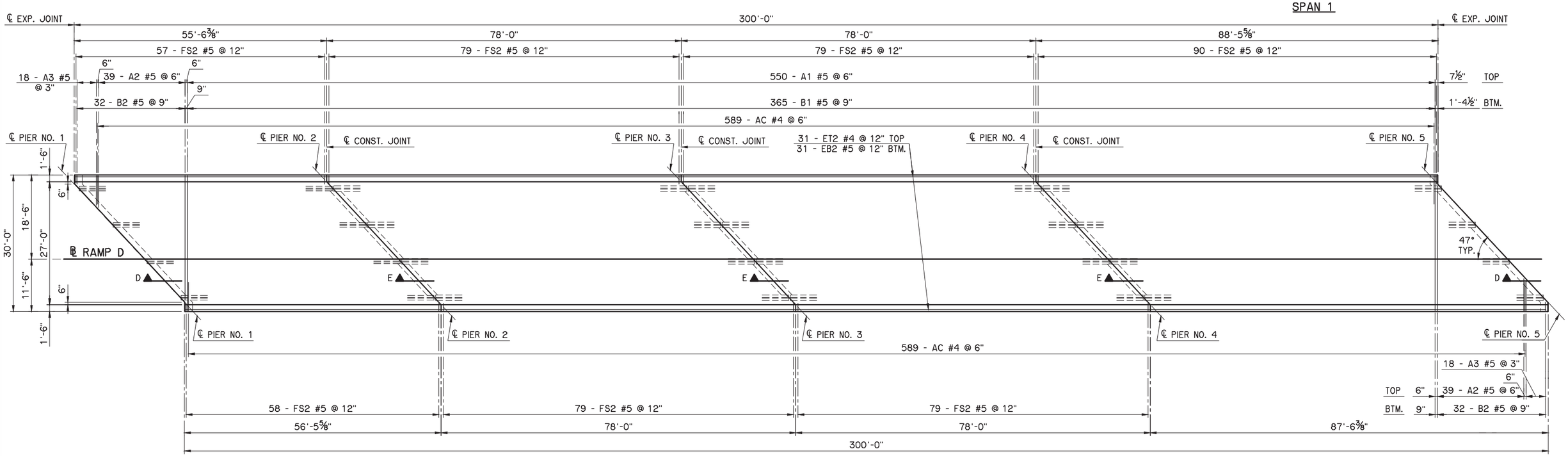

SLAB REINFORCING

REVISIONS		
REV. NO.	DESCRIPTION	DATE

I-44 E.B. TO U.S.169 N.B. RAMP D — TULSA COUNTY

SUPERSTRUCTURE DETAILS
SHEET 14 OF 21
SLAB REINFORCING PLANS

Design	AFW
Detail	DRB
Check	KGL

WHITE ENGINEERING ASSOCIATES

STATE OF OKLAHOMA — DEPARTMENT OF TRANSPORTATION

JOB PIECE NO. 10981(05) — SHEET NO. B039

I:\Active\1611\Drawings\B039 SS14 Slab 1.dwg, 11/2/2020 1:29:04 PM, Deanne

REVISIONS		
REV. NO.	DESCRIPTION	DATE

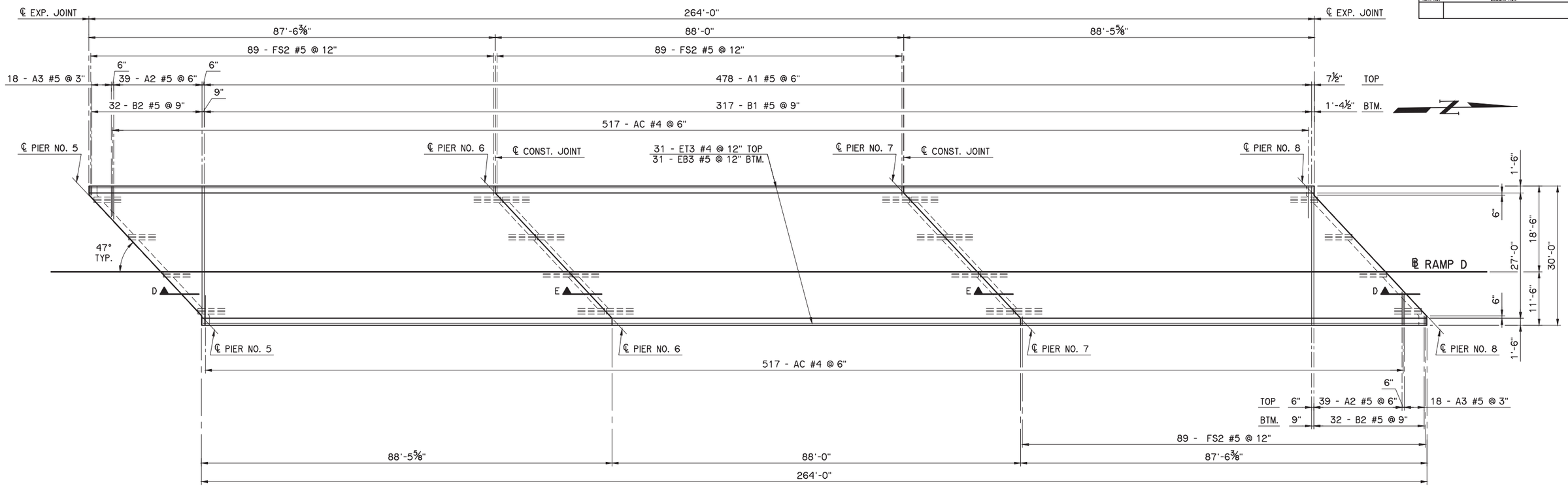

SLAB REINFORCING

NOTES:

ALL LONGITUDINAL DIMENSIONS ARE ALONG INSIDE FACE OF PARAPET.

FOR EXPANSION JOINT SETTING SCHEDULE, SEE SHEET B027.

FOR ADDITIONAL SLAB REINFORCING AT END DIAPHRAGMS, SEE SHEET B042.

FOR SECTIONS D AND E, SEE SHEET B043.

FOR BAR LIST AND BAR BENDS, SEE SHEET B044.

FOR PARAPET ELEVATION WITH DRAINAGE OPENINGS, SEE SHEET B045.

I-44 E.B. TO U.S.169 N.B. RAMP D — TULSA COUNTY

SUPERSTRUCTURE DETAILS
SHEET 15 OF 21
SLAB REINFORCING PLANS

Design	AFW
Detail	DRB
Check	KGL

WHITE ENGINEERING ASSOCIATES

STATE OF OKLAHOMA — DEPARTMENT OF TRANSPORTATION

JOB PIECE NO. 10981(05) — SHEET NO. B040

I:\Active\1611\Drawings\B040 SS15 Slab 2.dwg, 11/2/2020 1:29:25 PM, Deanne

REVISIONS		
REV. NO.	DESCRIPTION	DATE

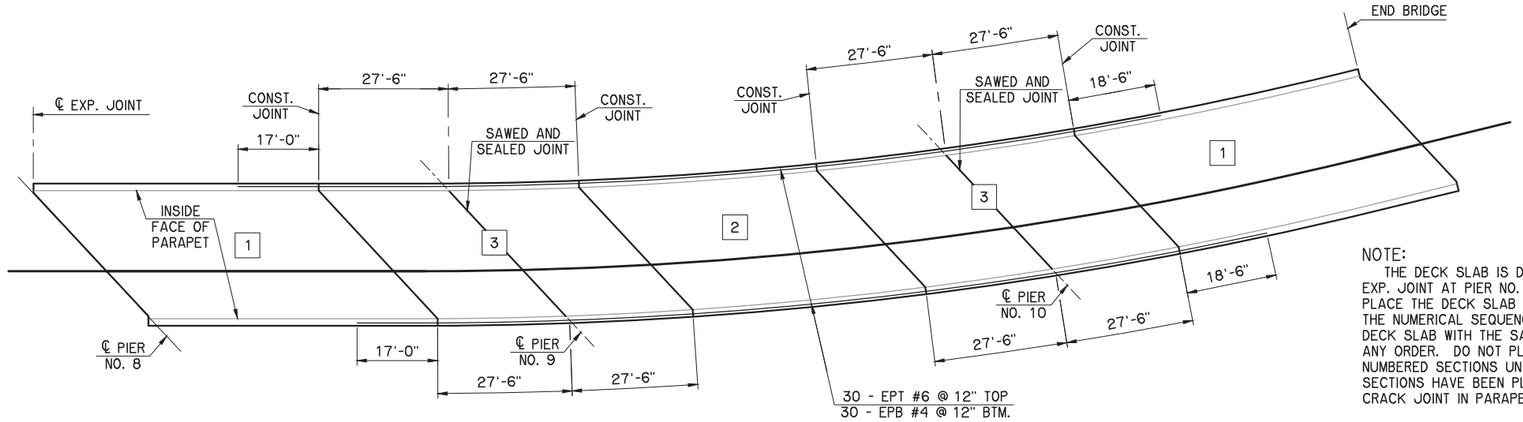

DECK SLAB LAYOUT AND SLAB POURING SEQUENCE

NOTE:
THE DECK SLAB IS DIVIDED INTO SECTIONS BETWEEN EXP. JOINT AT PIER NO. 8 AND END BRIDGE AS SHOWN. PLACE THE DECK SLAB CONCRETE OF EACH SECTION IN THE NUMERICAL SEQUENCE INDICATED. SECTIONS OF THE DECK SLAB WITH THE SAME NUMBER MAY BE PLACED IN ANY ORDER. DO NOT PLACE CONCRETE FOR HIGHER NUMBERED SECTIONS UNTIL ALL LOWER NUMBERED SECTIONS HAVE BEEN PLACED. PROVIDE A CONTROL CRACK JOINT IN PARAPETS AT CONST. JOINT LOCATIONS.

NOTES:
ALL LONGITUDINAL DIMENSIONS ARE ALONG INSIDE FACE OF PARAPET.

FOR EXPANSION JOINT SETTING SCHEDULE, SEE SHEET B027.

FOR ADDITIONAL SLAB REINFORCING AT END DIAPHRAGMS, SEE SHEET B042.

FOR SECTIONS A THRU D AND F, SEE SHEET B043.

FOR BAR LIST, AND BAR BENDS, SEE SHEET B044.

FOR PARAPET ELEVATION WITH DRAINAGE OPENINGS, SEE SHEET B045.

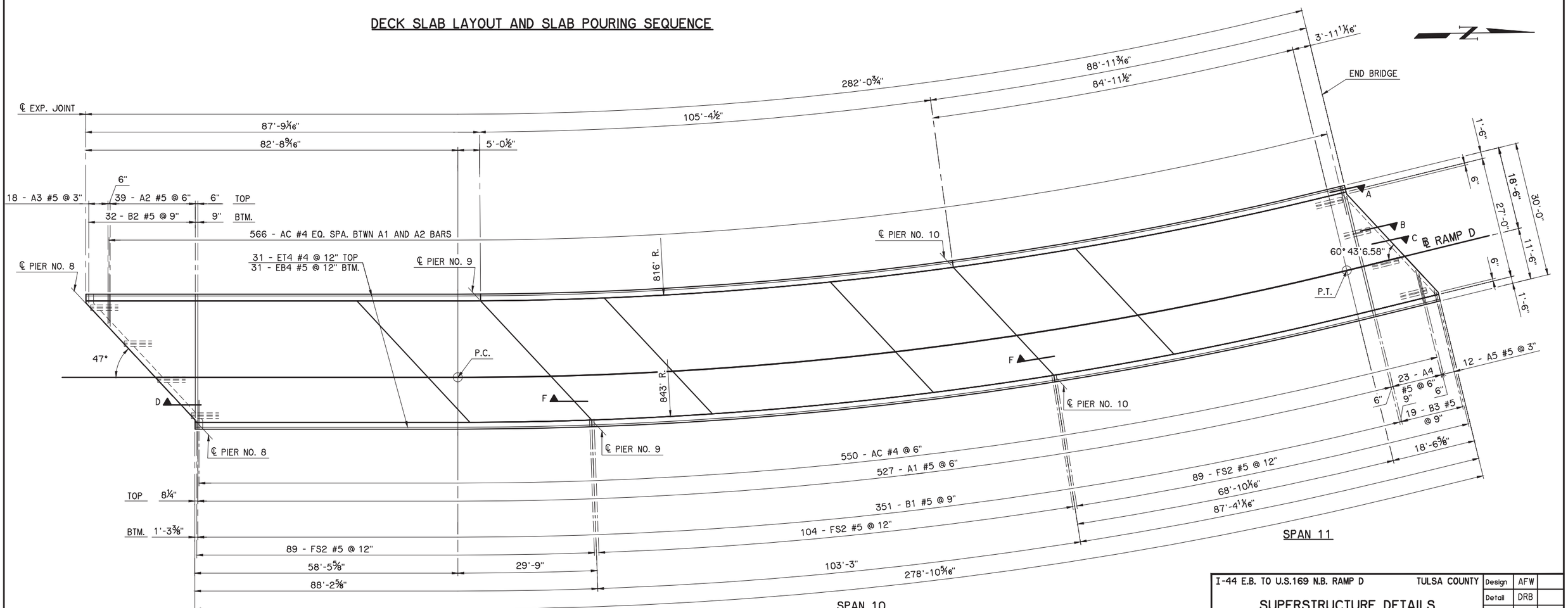

SLAB REINFORCING

I-44 E.B. TO U.S.169 N.B. RAMP D	TULSA COUNTY	Design	AFW
SUPERSTRUCTURE DETAILS SHEET 16 OF 21 SLAB REINFORCING PLANS		Detail	DRB
		Check	KGL
		WHITE ENGINEERING ASSOCIATES	
STATE OF OKLAHOMA	DEPARTMENT OF TRANSPORTATION		
	JOB PIECE NO. 10981(05)		SHEET NO. B041

I:\Active\11611\Drawings\B041 SS16 Slab 3.dwg, 11/2/2020 1:29:47 PM, Deanne

REVISIONS		
REV. NO.	DESCRIPTION	DATE

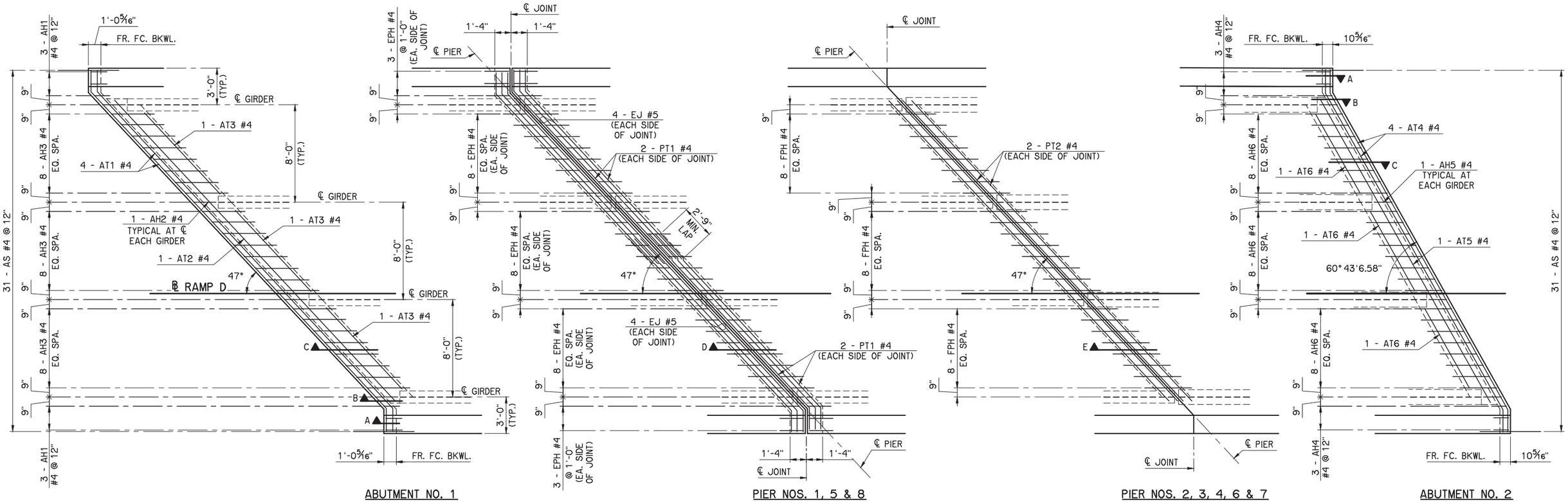

ADDITIONAL REINFORCING AT END DIAPHRAGMS

I-44 E.B. TO U.S.169 N.B. RAMP D — TULSA COUNTY

SUPERSTRUCTURE DETAILS

SHEET 17 OF 21

SLAB REINFORCING DETAILS

Design	AFW	
Detail	DRB	
Check	KGL	

WHITE ENGINEERING ASSOCIATES

STATE OF OKLAHOMA — DEPARTMENT OF TRANSPORTATION

JOB PIECE NO. 10981(05) — SHEET NO. B042

I:\Active\16111\Drawings\B042 SS17 slab ends.dwg, 11/2/2020 1:30:13 PM, Deanne

REVISIONS		
REV. NO.	DESCRIPTION	DATE

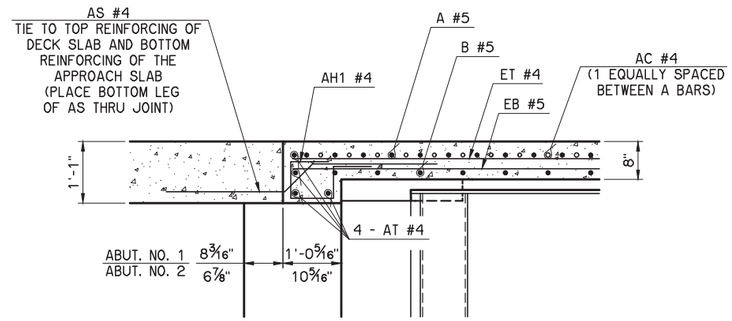

SECTION A

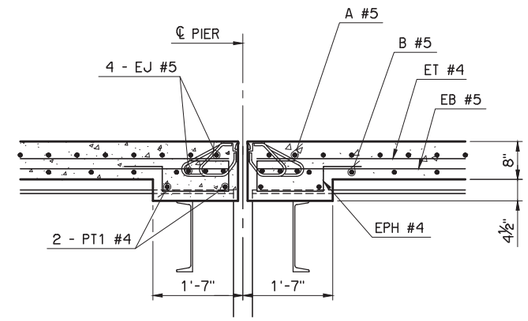

SECTION D

PIER NOS. 1, 5 & 8

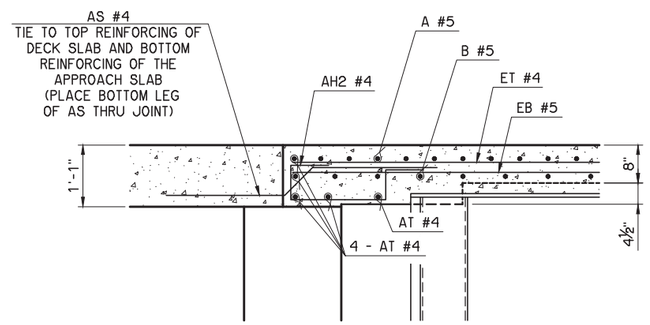

SECTION B

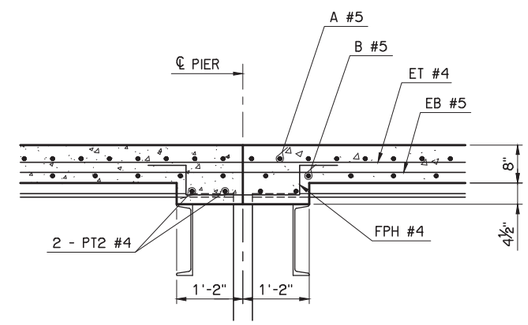

SECTION E

PIER NOS. 2, 3, 4, 6 & 7

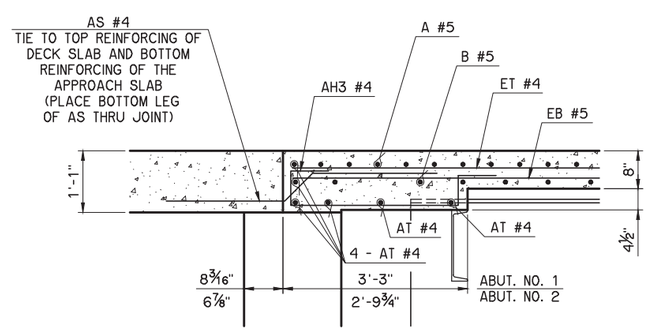

SECTION C

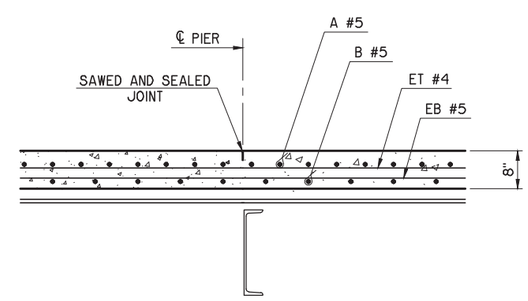

SECTION F

PIER NOS. 9 & 10

I-44 E.B. TO U.S.169 N.B. RAMP D — TULSA COUNTY

SUPERSTRUCTURE DETAILS

SHEET 18 OF 21

SLAB REINFORCING DETAILS

Design	AFW	
Detail	DRB	
Check	KGL	

WHITE ENGINEERING ASSOCIATES

STATE OF OKLAHOMA — DEPARTMENT OF TRANSPORTATION

JOB PIECE NO. 10981(05) — SHEET NO. B043

I:\Active\16111\Drawings\B043 SS18 slab details.dwg, 11/2/2020 1:30:35 PM, Deanne

REVISIONS		
REV. NO.	DESCRIPTION	DATE

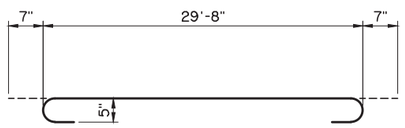

A1 #5 x 30'-10"

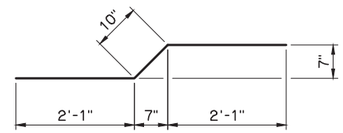

AS #4 x 5'-0"

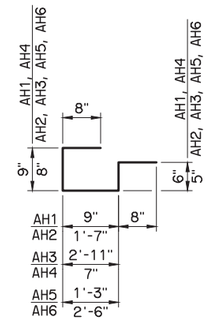

AH1 #4 x 3'-4"
AH2 #4 x 4'-0"
AH3 #4 x 5'-4"
AH4 #4 x 3'-2"
AH5 #4 x 3'-8"
AH6 #4 x 4'-11"

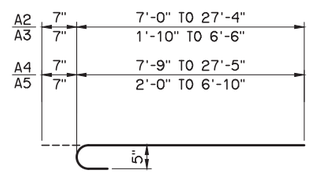

A2 #5 x 17'-9" AVG.
A3 #5 x 4'-9" AVG.
A4 #5 x 18'-2" AVG.
A5 #5 x 5'-0" AVG.

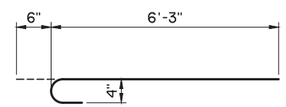

AC1 #4 x 6'-9"

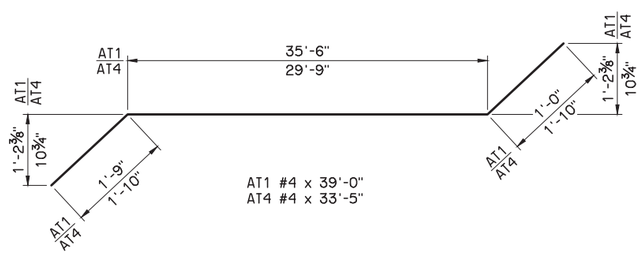

AT1 #4 x 39'-0"
AT4 #4 x 33'-5"

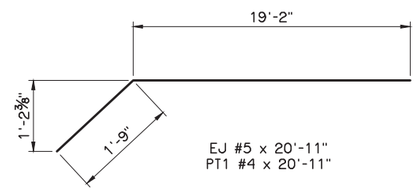

EJ #5 x 20'-11"
PT1 #4 x 20'-11"

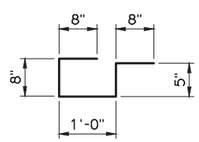

EPH #4 x 3'-5"

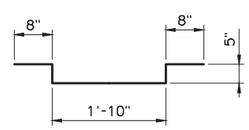

FPH #4 x 4'-0"

SUPERSTRUCTURE BAR LIST

	MARK	SIZE	NO.	FORM	LENGTH	LENGTH VARIATION
	EPOXY COATED REINFORCING BARS					
	A1	#5	1602	BNT.	30'-10"	
1	A2	#5	273	BNT.	17'-9" AVG.	7'-7" TO 27'-11"
2	A3	#5	126	BNT.	4'-9" AVG.	2'-5" TO 7'-1"
	A4	#5	23	BNT.	18'-2" AVG.	8'-4" TO 28'-0"
	A5	#5	12	BNT.	5'-0" AVG.	2'-7" TO 7'-5"
	AC	#4	3500	BNT.	6'-9"	
	AH1	#4	6	BNT.	3'-4"	
	AH2	#4	4	BNT.	4'-0"	
	AH3	#4	24	BNT.	5'-4"	
	AH4	#4	6	BNT.	3'-2"	
	AH5	#4	4	BNT.	3'-8"	
	AH6	#4	24	BNT.	4'-11"	
	AS	#4	62	BNT.	5'-0"	
	AT1	#4	4	BNT.	39'-0"	
	AT2	#4	1	STR.	34'-3"	
	AT3	#4	3	STR.	9'-0"	
	AT4	#4	4	BNT.	33'-5"	
	AT5	#4	1	STR.	28'-8"	
	AT6	#4	3	STR.	7'-6"	
	B1	#5	1063	STR.	29'-8"	
3	B2	#5	224	STR.	14'-9" AVG.	2'-3" TO 27'-3"
	B3	#5	19	STR.	14'-8" AVG.	2'-8" TO 26'-8"
	EB1	#5	31	STR.	48'-0"	
4 10	EB2	#5	31	STR.	313'-5"	
5 10	EB3	#5	31	STR.	274'-8"	
5 10 11	EB4	#5	31	BNT.	291'-3" AVG.	289'-11" TO 292'-7"
	ET1	#4	31	STR.	48'-0"	
6 10	ET2	#4	31	STR.	308'-5"	
7 10	ET3	#4	31	STR.	270'-8"	
7 10 11	ET4	#4	31	BNT.	287'-3" AVG.	285'-11" TO 288'-7"
	EJ	#5	48	BNT.	20'-11"	
	EPH	#4	180	BNT.	3'-5"	
8 10 11	EPB	#4	30	BNT.	200'-2" AVG.	199'-1" TO 201'-3"
9 10 11	EPT	#6	30	BNT.	206'-2"	205'-1" TO 207'-3"
	FPH	#4	120	BNT.	4'-0"	
12	FS2	#5	1624	BNT.	7'-4"	
12	L	#4	186	BNT.	1'-3"	
	PT1	#4	12	BNT.	20'-11"	
	PT2	#4	78	STR.	33'-8"	

1. 7 SETS OF 39 BARS
2. 7 SETS OF 18 BARS
3. 7 SETS OF 32 BARS
4. INCLUDES 5 - 2'-9" MINIMUM LAP LENGTHS
5. INCLUDES 4 - 2'-9" MINIMUM LAP LENGTHS
6. INCLUDES 5 - 1'-9" MINIMUM LAP LENGTHS
7. INCLUDES 4 - 1'-9" MINIMUM LAP LENGTHS
8. INCLUDES 3 - 1'-9" MINIMUM LAP LENGTHS
9. INCLUDES 3 - 3'-9" MINIMUM LAP LENGTHS
10. DO NOT LAP WITHIN 10' OF CENTERLINE OF PIER
11. FIELD BEND TO FIT ROADWAY CURVE
12. REFER TO STD. FSHP-42-2 FOR BAR BENDS

I-44 E.B. TO U.S.169 N.B. RAMP D — TULSA COUNTY

SUPERSTRUCTURE DETAILS

SHEET 19 OF 21
SLAB REINFORCING PLANS

Design	AFW	
Detail	DRB	
Check	KGL	

WHITE ENGINEERING ASSOCIATES

STATE OF OKLAHOMA — DEPARTMENT OF TRANSPORTATION

JOB PIECE NO. 10981(05) — SHEET NO. B044

I:\Active\16111\Drawings\B044 SS19 slab bars.dwg, 11/2/2020 1:30:56 PM, Deanne

REVISIONS		
REV. NO.	DESCRIPTION	DATE

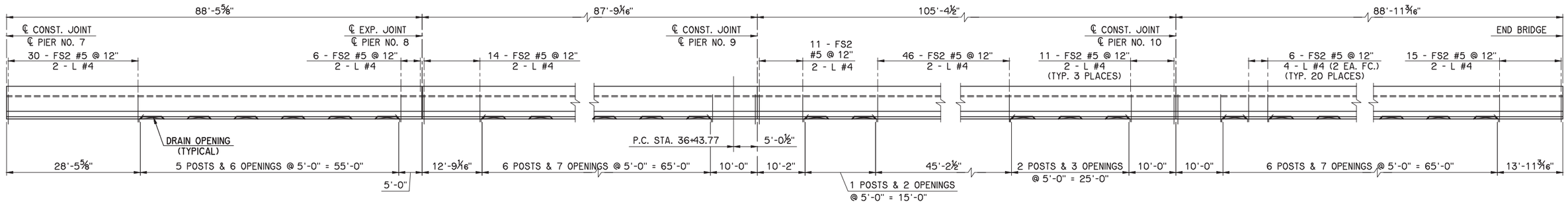

WEST PARAPET ELEVATION

ROADWAY FACE OF PARAPET
(SPANS 1 - 7 DO NOT HAVE PARAPET DRAINS)

NOTE:
PROVIDE A CONTROL CRACK JOINT IN PARAPETS IN SPANS 8, 9 AND 10 AT CONSTRUCTION JOINTS LOCATED 27'-6" EITHER SIDE OF PIERS 9 & 10.

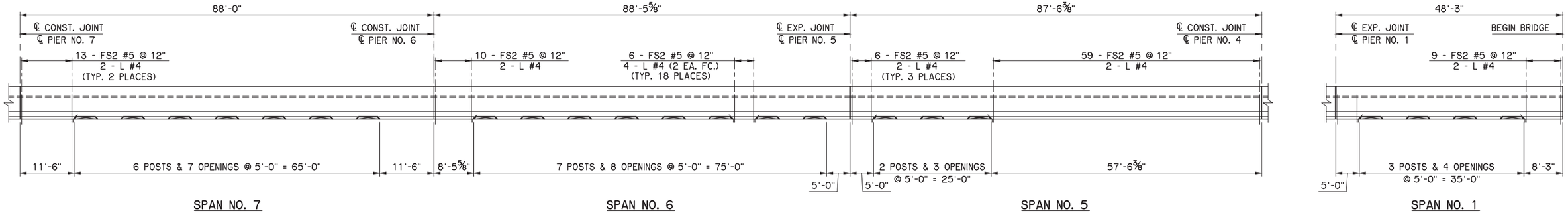

EAST PARAPET ELEVATION

ROADWAY FACE OF PARAPET
(SPANS 2 - 4 AND 8 - 11 DO NOT HAVE PARAPET DRAINS)

NOTES:

ALL DIMENSIONS ARE ALONG INSIDE FACE OF PARAPET.

FOR ADDITIONAL DETAIL, SEE STD. FSHP-42-2.

FOR EXPANSION JOINT SETTING SCHEDULE, SEE SHEET B027.

FOR BRIDGE SUPERSTRUCTURE BAR LIST, SEE SHEET B044.

I-44 E.B. TO U.S.169 N.B. RAMP D	TULSA COUNTY	Design	AFW	
SUPERSTRUCTURE DETAILS SHEET 20 OF 21 PARAPET DRAIN OPENINGS		Detail	DRB	
		Check	KGL	
		WHITE ENGINEERING ASSOCIATES		
STATE OF OKLAHOMA	DEPARTMENT OF TRANSPORTATION			
	JOB PIECE NO. 10981(05)		SHEET NO. B045	

I:\Active\16111\Drawings\B045 SS20 Parapet.dwg, 11/2/2020 1:31:18 PM, Deanne

REVISIONS		
REV. NO.	DESCRIPTION	DATE

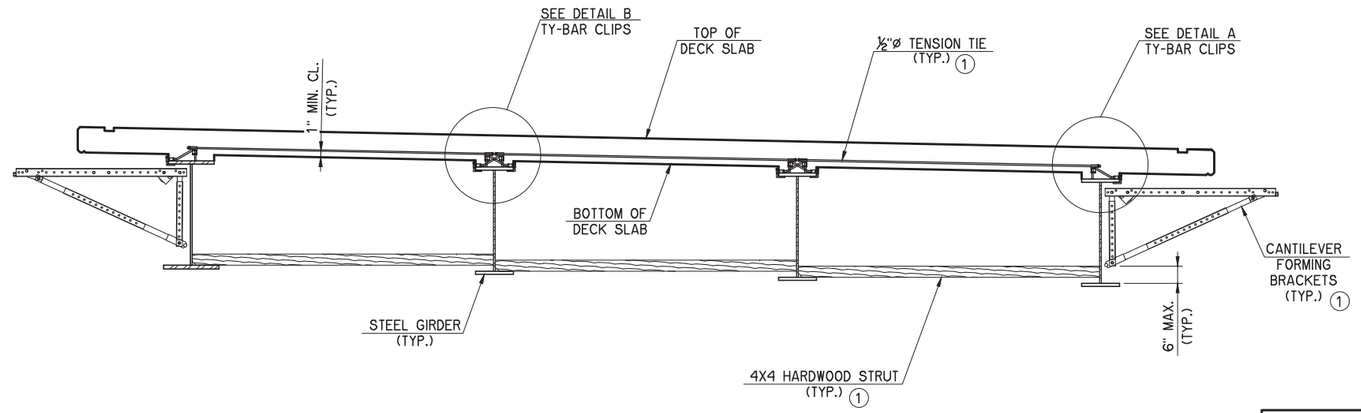

GIRDER BRACING FOR DECK SLAB PLACEMENT

BRACING SYSTEM SHOWN FOR ILLUSTRATION PURPOSES ONLY. ALTERNATIVE SYSTEMS MAY BE CONSIDERED. SEE GENERAL NOTES FOR DESIGN REQUIREMENTS AND LIMITATIONS.

1 SPACING OF FORMING BRACKETS, TENSION TIES, AND HARDWOOD STRUTS TO BE DETERMINED BY A PROFESSIONAL ENGINEER LICENSED IN THE STATE OF OKLAHOMA FOR THE LOADS ANTICIPATED DURING CONSTRUCTION. SEE GENERAL NOTES FOR ADDITIONAL INFORMATION.

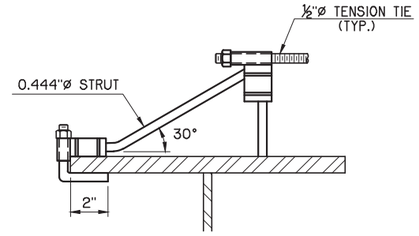

DETAIL A

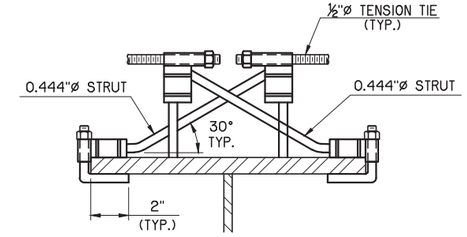

DETAIL B

TY-BAR CLIP DETAILS

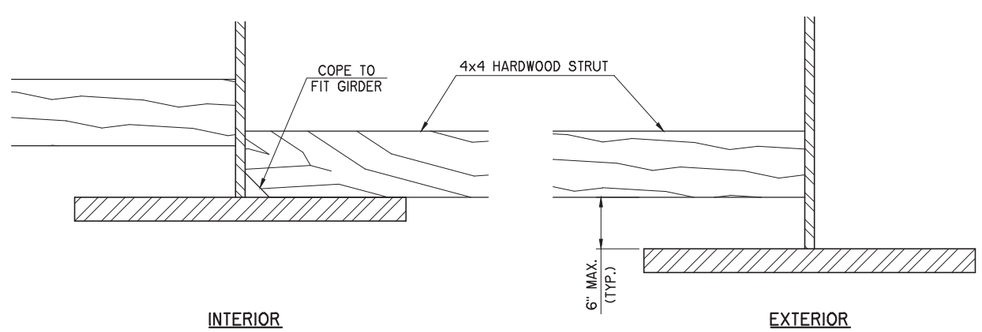

INTERIOR

EXTERIOR

HARDWOOD STRUT DETAIL

I-44 E.B. TO U.S.169 N.B. RAMP D	TULSA COUNTY	Design	AFW
SUPERSTRUCTURE DETAILS SHEET 21 OF 21 GIRDER BRACING		Detail	DRB
		Check	AFW
		WHITE ENGINEERING ASSOCIATES	
STATE OF OKLAHOMA	DEPARTMENT OF TRANSPORTATION		
	JOB PIECE NO. 10981(05)		SHEET NO. B046

I:\Active\16111\Drawings\B046 SS21 bracing.dwg, 11/2/2020 1:31:39 PM, Deanne

REVISIONS		
REV. NO.	DESCRIPTION	DATE

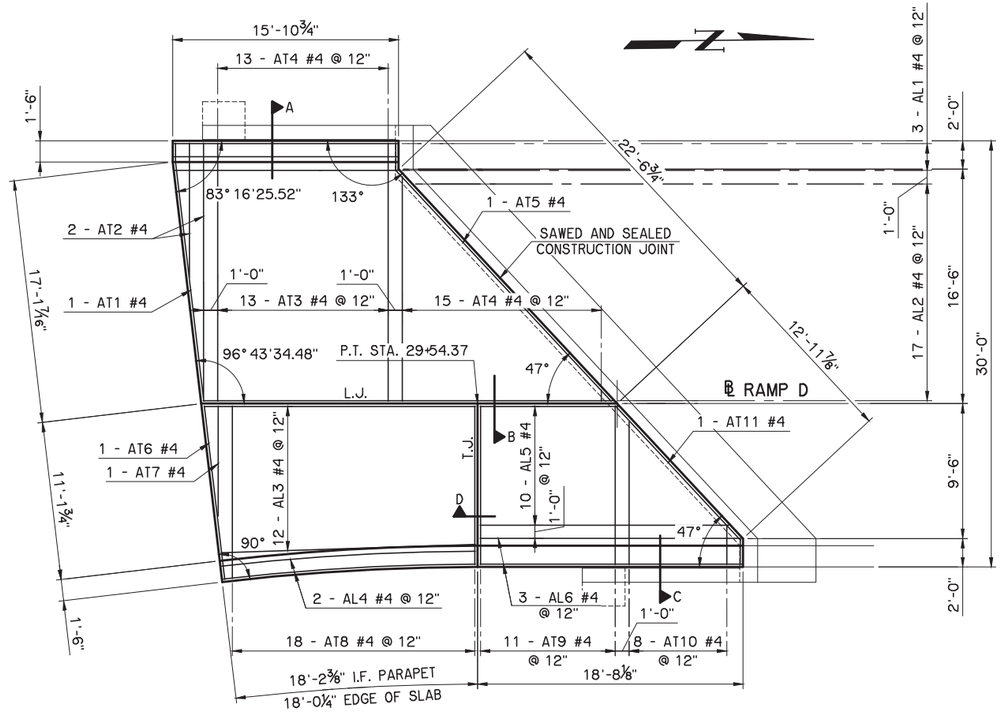

TOP REINFORCING MAT DETAILS

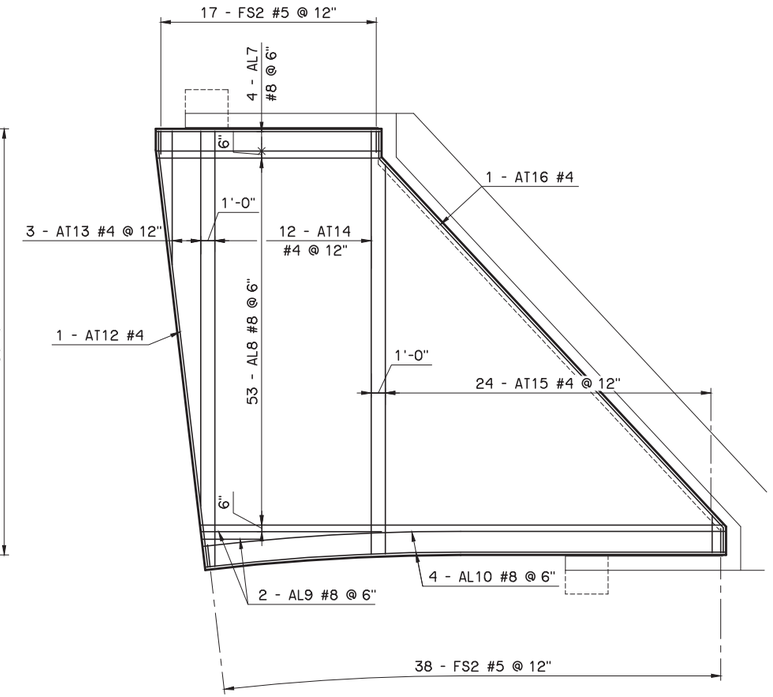

BOTTOM REINFORCING MAT DETAILS

APPROACH SLAB NO. 1

NOTES:
LONGITUDINAL JOINT DOES NOT FOLLOW CURVE ON ℄ RAMP D.

L.J. = LONGITUDINAL JOINT SAWED AND SEALED (SEE STD. LECS-5)
T.J. = TRANSVERSE JOINT SAWED AND SEALED (SEE STD. LECS-5)
I.F. = INSIDE FACE

SEE SHEET B048 FOR SECTIONS A, B, C & D.

APPROACH SLAB NO. 1 BAR LIST

	MARK	SIZE	NO.	FORM	LENGTH	LENGTH VARIATION
	EPOXY COATED REINFORCING					
	AT1	#4	1	BNT.	18'-3"	
	AT2	#4	2	STR.	13'-8" AVG.	9'-5" TO 17'-11"
	AT3	#4	13	STR.	18'-2"	
	AT4	#4	15	STR.	8'-3" AVG.	0'-9" TO 15'-9"
	AT5	#4	1	BNT.	24'-1"	
	AT6	#4	1	STR.	12'-3"	
	AT7	#4	1	STR.	8'-1"	
	AT8	#4	18	STR.	11'-8" AVG.	11'-2" TO 12'-2"
	AT9	#4	11	STR.	11'-2"	
	AT10	#4	8	STR.	6'-5" AVG.	2'-9" TO 10'-1"
	AT11	#4	1	BNT.	14'-8"	
	AT12	#4	1	BNT.	30'-11"	
	AT13	#4	3	STR.	17'-11" AVG.	9'-5" TO 26'-5"
	AT14	#4	12	STR.	30'-2" AVG.	29'-9" TO 30'-7"
	AT15	#4	24	STR.	14'-11" AVG.	2'-7" TO 27'-3"
	AT16	#4	1	BNT.	39'-2"	
	AL1	#4	3	STR.	15'-8"	
	AL2	#4	17	STR.	22'-8" AVG.	16'-6" TO 28'-10"
	AL3	#4	12	STR.	18'-6" AVG.	17'-11" TO 19'-1"
1	AL4	#4	2	STR.	17'-10"	
	AL5	#4	10	STR.	13'-7" AVG.	9'-8" TO 17'-6"
	AL6	#4	3	STR.	18'-5"	
	AL7	#8	4	STR.	15'-8"	
	AL8	#8	53	STR.	26'-2" AVG.	15'-9" TO 36'-7"
	AL9	#8	2	STR.	8'-4" AVG.	4'-1" TO 12'-7"
1	AL10	#8	4	STR.	36'-7"	
2	FS2	#5	55	BNT.	7'-4"	

1 LENGTH OF BARS CALCULATED ALONG ℄ CURVE. FIELD BENT BARS TO FOLLOW ℄ CURVE.

2 FOR BAR BEND, SEE STD. FSHP-42-2

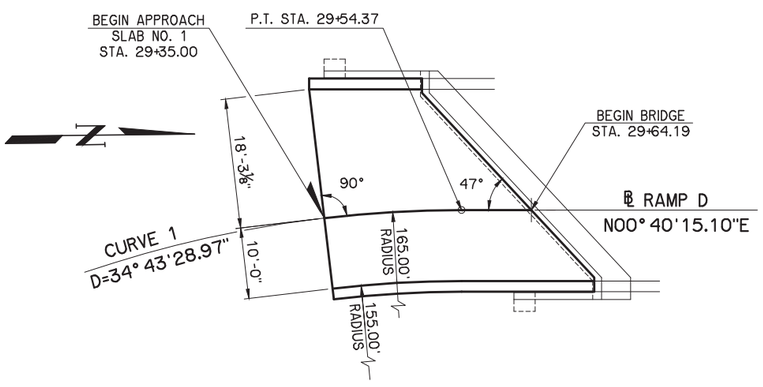

APPROACH SLAB NO. 1
LAYOUT PLAN

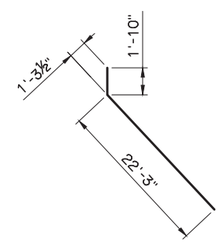

AT5 #4 x 24'-1"

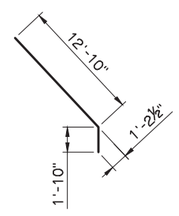

AT11 #4 x 14'-8"

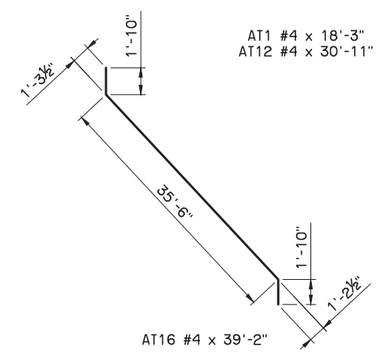

AT16 #4 x 39'-2"

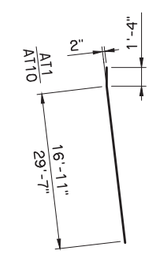

AT1 #4 x 18'-3"
AT12 #4 x 30'-11"

APPROACH SLAB QUANTITIES

ITEM	UNIT	APP. SLAB 1	APP. SLAB 2	TOTAL
APPROACH SLAB	S.Y.	88.8	101.8	190.6
SAW-CUT GROOVING	S.Y.	80.1	91.6	171.7
42" F-SHAPED PARAPET	L.F.	52.8	61.1	113.9
WATER REPELLENT (VISUALLY INSPECTED)	S.Y.	26	30	56

NOTE: APPROACH SLABS CONSTRUCTED IN PHASE 3.

I-44 E.B. TO U.S.169 N.B. RAMP D — TULSA COUNTY

APPROACH SLAB DETAILS
SHEET 1 OF 2
APPROACH SLAB NO. 1

Design	ADT	
Detail	DRB	
Check	ADT	

WHITE ENGINEERING ASSOCIATES

STATE OF OKLAHOMA — DEPARTMENT OF TRANSPORTATION
JOB PIECE NO. 10981(05) — SHEET NO. B047

I:\Active\1611\Drawings\B047 App slab 1.dwg, 11/2/2020 1:32:52 PM, Deanne

REVISIONS		
REV. NO.	DESCRIPTION	DATE

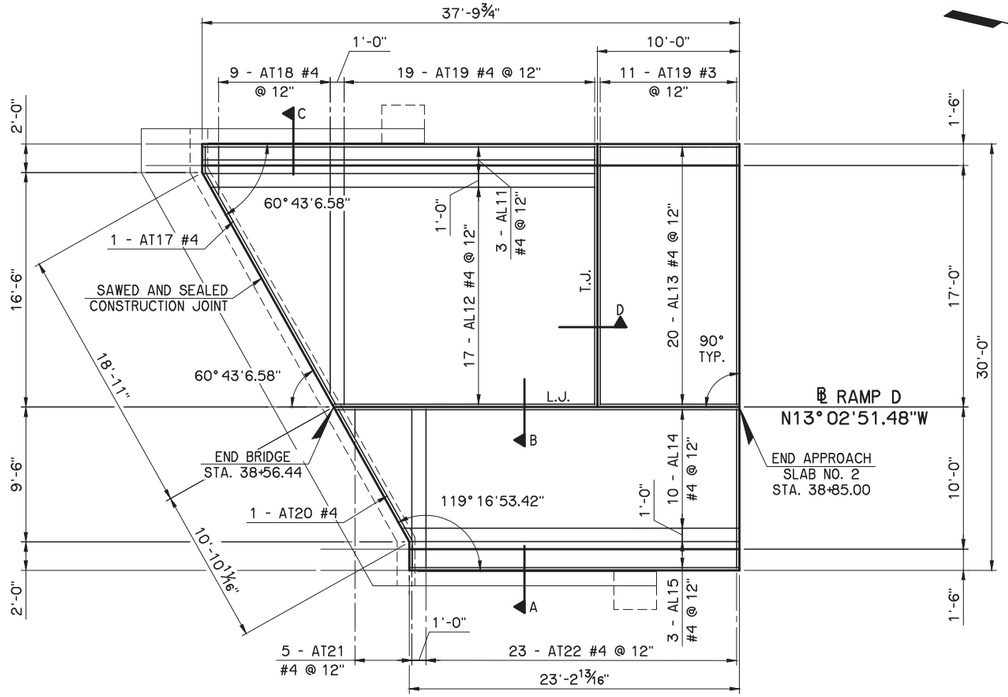

TOP REINFORCING MAT DETAILS

NOTES:
LONGITUDINAL JOINT FOLLOWS ℄ RAMP D.

L.J. = LONGITUDINAL JOINT SAWED AND SEALED (SEE STD. LECS-5)
T.J. = TRANSVERSE JOINT SAWED AND SEALED (SEE STD. LECS-5)
I.F. = INSIDE FACE

SEE SHEET B047 FOR QUANTITY BLOCK.

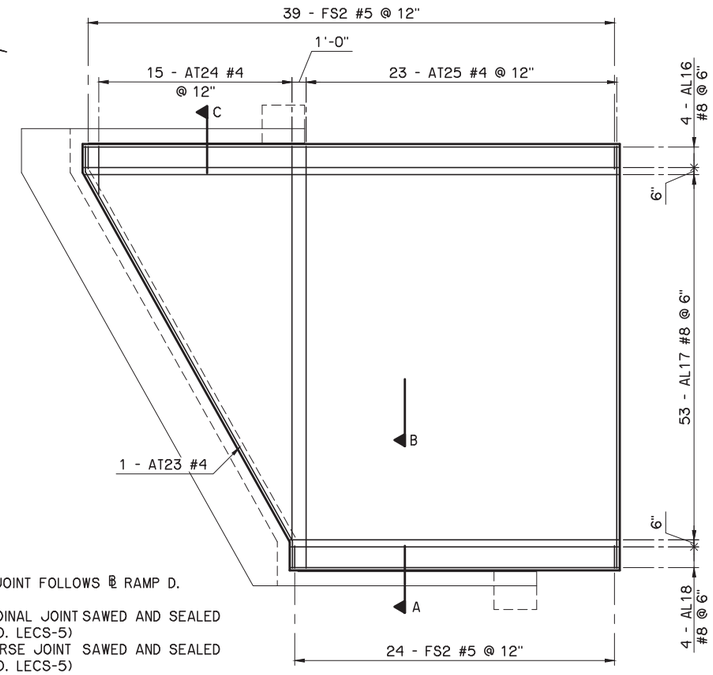

BOTTOM REINFORCING MAT DETAILS

APPROACH SLAB NO. 2

MARK	SIZE	NO.	FORM	LENGTH	LENGTH VARIATION
EPOXY COATED REINFORCING					
AT17	#4	1	BNT.	20'-7"	
AT18	#4	9	STR.	10'-5" AVG.	3'-5" TO 17'-5"
AT19	#4	30	STR.	18'-2"	
AT20	#4	1	BNT.	12'-6"	
AT21	#4	5	STR.	5'-7" AVG.	2'-0" TO 9'-2"
AT22	#4	23	STR.	11'-2"	
AT23	#4	1	BNT.	33'-6"	
AT24	#4	15	STR.	15'-7" AVG.	3'-5" TO 27'-9"
AT25	#4	23	STR.	29'-8"	
AL11	#4	3	STR.	27'-6"	
AL12	#4	17	STR.	22'-8" AVG.	18'-5" TO 26'-11"
AL13	#4	20	STR.	9'-9"	
AL14	#4	10	STR.	25'-11" AVG.	23'-7" TO 28'-3"
AL15	#4	3	STR.	23'-0"	
AL16	#8	4	STR.	37'-7"	
AL17	#8	53	STR.	30'-4" AVG.	23'-2" TO 37'-6"
AL18	#8	4	STR.	23'-0"	
(1) FS2	#5	63	BNT.	7'-4"	

(1) FOR BAR BEND, SEE STD. FSHP-42-2

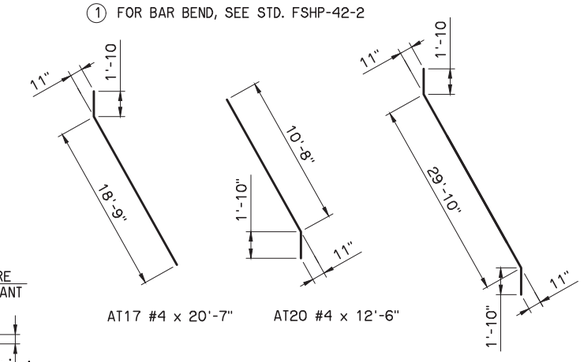

NOTES:
FOR ADDITIONAL DETAIL OF CONCRETE PARAPET, SEE STD. FSHP-42-2.

FOR ADDITIONAL DETAIL OF APPROACH SLAB AT ABUTMENT, SEE SHEET B027 AND B043.

PLACE REINFORCING IN THE TOP OF THE APPROACH SLAB 2" FROM EITHER SIDE OF THE SAWED AND SEALED JOINTS. FOR ADDITIONAL DETAILS OF JOINTS, SEE STD. LECS-5.

FOR XSLOPE, SEE SUPERELEVATION TRANSITION DATA ON SHEET B003.

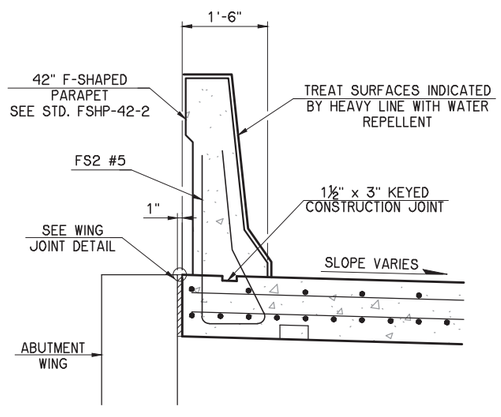

SECTION A

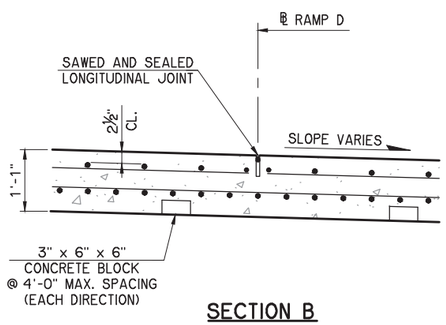

SECTION B

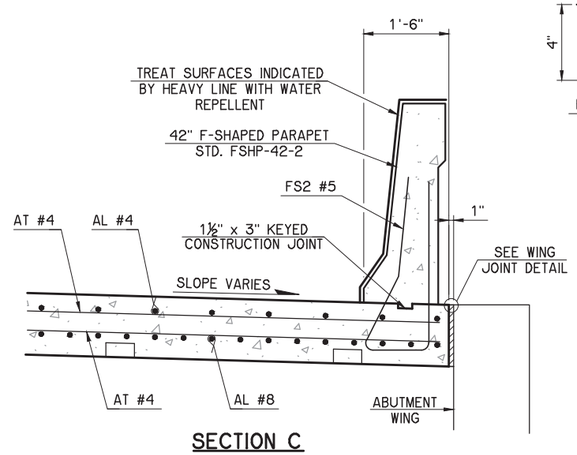

SECTION C

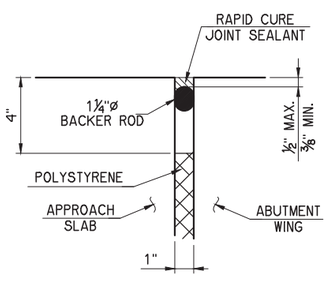

WING JOINT DETAIL

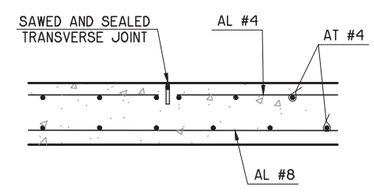

SECTION D

I-44 E.B. TO U.S.169 N.B. RAMP D — TULSA COUNTY

APPROACH SLAB DETAILS
SHEET 2 OF 2
APPROACH SLAB 2

Design	ADT	
Detail	DRB	
Check	ADT	

WHITE ENGINEERING ASSOCIATES

STATE OF OKLAHOMA — DEPARTMENT OF TRANSPORTATION

JOB PIECE NO. 10981(05) — SHEET NO. B048

I:\Active\16111\Drawings\B048 App slab 2.dwg, 11/2/2020 1:33:13 PM, Deanne

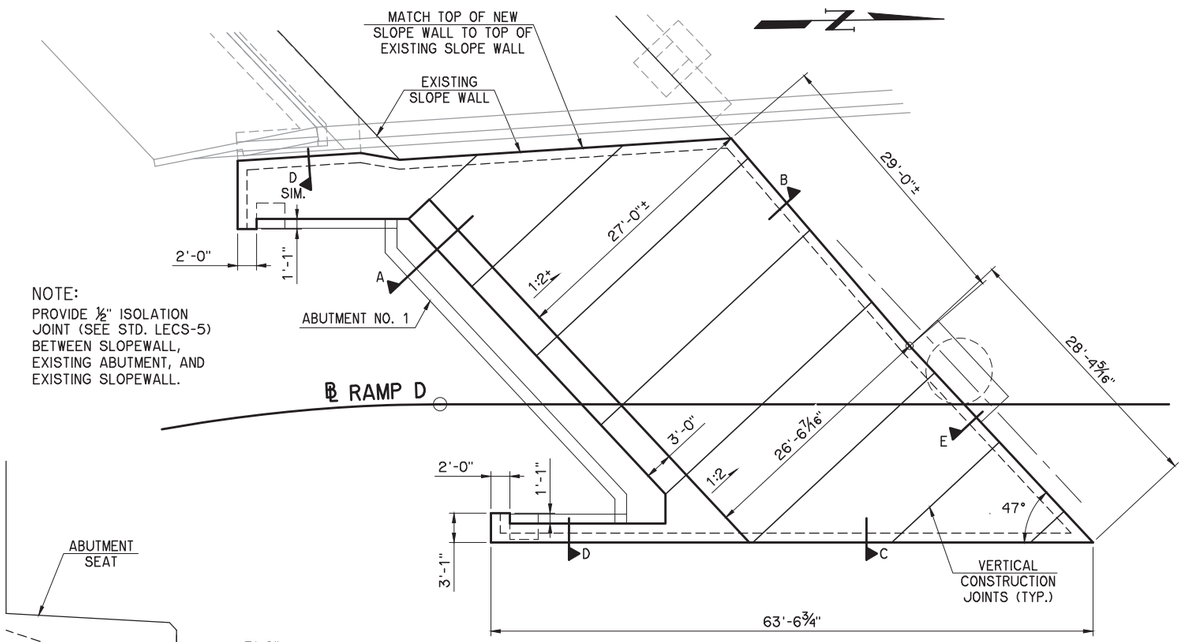

NOTE:
PROVIDE ½" ISOLATION JOINT (SEE STD. LECS-5) BETWEEN SLOPEWALL, EXISTING ABUTMENT, AND EXISTING SLOPEWALL.

SLOPE WALL NO. 1

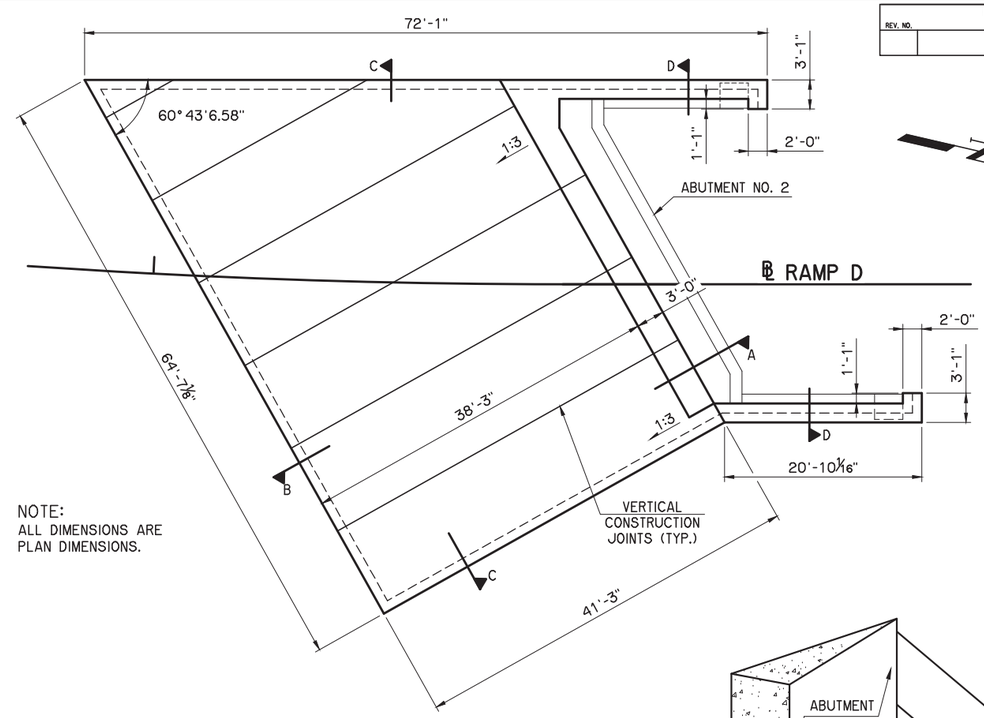

NOTE:
ALL DIMENSIONS ARE PLAN DIMENSIONS.

SLOPE WALL NO. 2

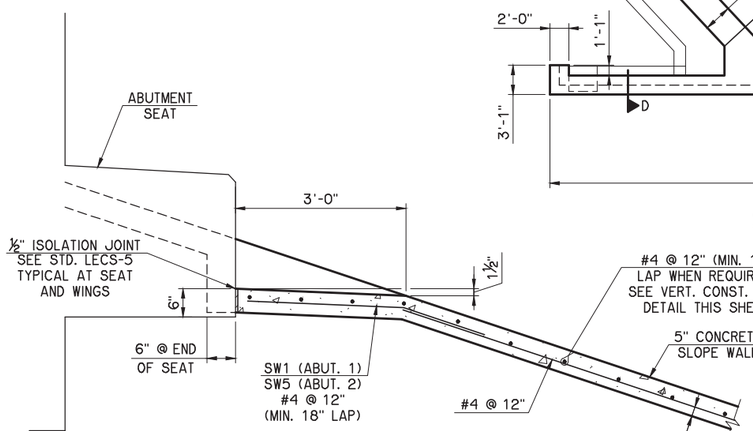

SECTION A

ALL REINFORCING IN SLOPE WALL IS PLAIN REINFORCING STEEL.

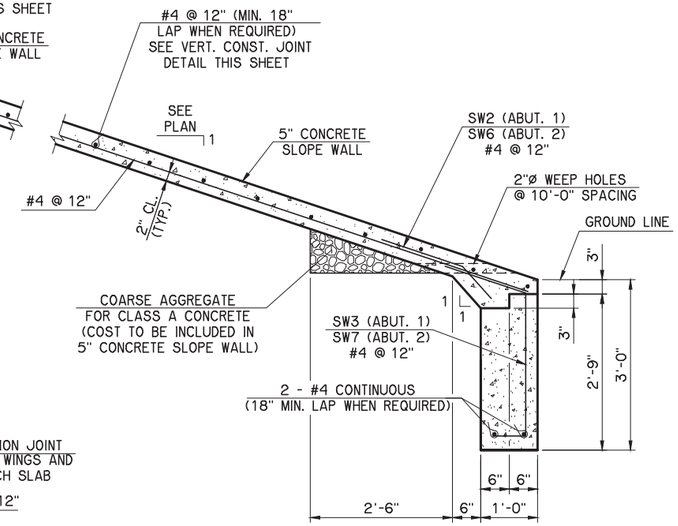

SECTION B

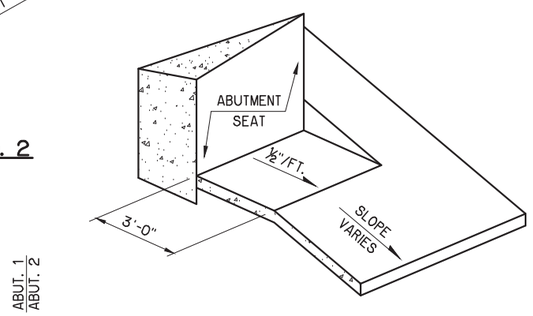

ISOMETRIC VIEW AT END OF ABUTMENTS

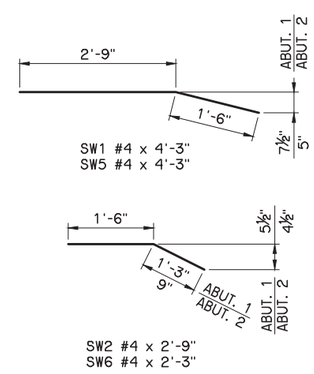

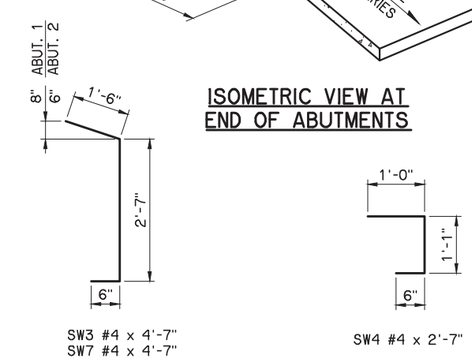

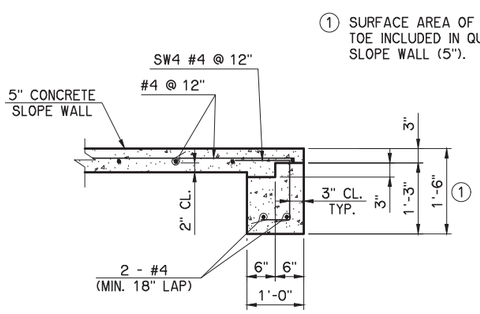

1 SURFACE AREA OF SLOPE WALL TOE INCLUDED IN QUANTITY FOR SLOPE WALL (5").

SECTION C

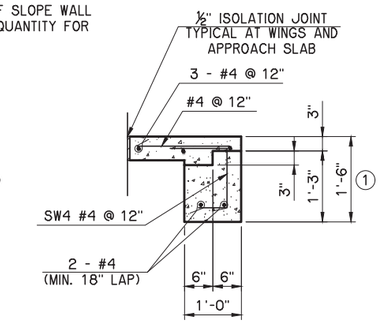

SECTION D

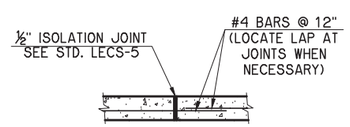

VERTICAL CONSTRUCTION JOINT DETAIL

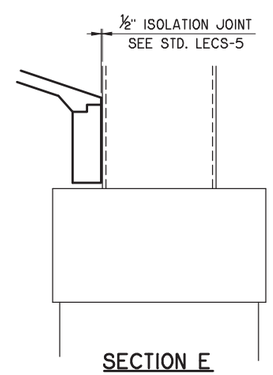

SECTION E

SLOPE WALL QUANTITIES				
ITEM	UNIT	SLOPE WALL NO. 1	SLOPE WALL NO. 2	TOTAL
SLOPE WALL (5")	S.Y.	268	312	580

NOTE: SLOPE WALLS CONSTRUCTED IN PHASE 3.

REVISIONS		
REV. NO.	DESCRIPTION	DATE

I-44 E.B. TO U.S.169 N.B. RAMP D — TULSA COUNTY

SLOPE WALL DETAILS

Design	AFW	
Detail	DRB	
Check	ADT	

WHITE ENGINEERING ASSOCIATES

STATE OF OKLAHOMA — DEPARTMENT OF TRANSPORTATION

JOB PIECE NO. 10981(05) — SHEET NO. B049

I:\Active\16111\Drawings\B049 Slopewall dtl.dwg, 11/2/2020 1:33:46 PM, Deanne

STORM WATER MANAGEMENT PLAN

SITE DESCRIPTION

PROJECT LIMITS: TULSA: I-44 AT US 169 INTERCHANGE(SELECTED MOVEMENTS)

PROJECT DESCRIPTION: INTERCHANGE (OPERATIONAL IMPROVEMENTS)

SUGGESTED SEQUENCE OF EROSION CONTROL ACTIVITIES:
PRIOR TO INITIATING SOIL DISTURBING ACTIVITIES, THE CONTRACTOR WILL INSTALL ALL PERIMETER TEMPORARY SEDIMENT CONTROLS SPECIFIED. STRIP, STOCKPILE AND STABILIZE TOPSOIL. CLEAR AND GRUB ONLY IN NECESSARY AREAS, PRESERVING AS MUCH NATIVE VEGETATION AS POSSIBLE. INSTALL, MAINTAIN AND/OR MOVE TEMPORARY SEDIMENT ITEMS WITH CONSTRUCTION OPERATIONS AS PRACTICAL. IF DIRECTED BY THE ENGINEER, PLANT TEMPORARY SEEDING. REPLACE SALVAGED TOPSOIL AND DEVICES WHEN AN ACCEPTABLE VEGETATIVE COVER (AT LEAST 70%) HAS BEEN ATTAINED. AS SITE CONDITIONS WARRANT, THE CONTRACTOR MAY CHOOSE TO MODIFY THE TYPE OR ARRANGEMENT OF SPECIFIED PRACTICES TO IMPROVE THEIR EFFECTIVENESS AS APPROVED BY THE ENGINEER. THE CONTRACTOR WILL MAINTAIN A LOG OF THE DATES OF MAJOR SOIL DISTURBANCE ACTIVITIES, AND ALSO THE DATES OF INSTALLATION OF

SOIL TYPE: LEAN CLAY WITH SAND

TOTAL AREA OF THE CONSTRUCTION SITE: 30.00 ACRES

ESTIMATED AREA TO BE DISTURBED: 9.60 ACRES

OFFSITE AREA TO BE DISTURBED: (FOR CONTRACTOR USE) – ACRES

TOTAL IMPERVIOUS AREA PRE-CONSTRUCTION: 3.65 ACRES

TOTAL IMPERVIOUS AREA POST-CONSTRUCTION: 5.47 ACRES

POST-CONSTRUCTION RUNOFF COEFFICIENT OF THE SITE: 0.68

LATITUDE & LONGITUDE OF CENTER OF PROJECT: LAT 36° 08' 22" N LONG 95° 51' 36" W

PROJECT WILL DISCHARGE TO:

NAME OF RECEIVING WATERS: TRIBUTARY TO MINGO CREEK

SENSITIVE WATERS OR WATERSHEDS: YES ☐ NO ☒

303(d) IMPAIRED WATERS: YES ☐ NO ☒

IF YES, LIST IMPAIRMENT:

LOCATED IN A TMDL: YES ☐ NO ☒

MS4 ENTITY: YES ☒ NO ☐

IF YES, LOCATION: CITY OF TULSA

NOTE:
THIS SHEET SHOULD BE USED IN CONJUNCTION WITH A DRAINAGE MAP THAT ILLUSTRATES THE DRAINAGE PATTERNS/PATHWAYS AND RECEIVING WATERS FOR THIS PROJECT. THIS SHEET SHOULD ALSO BE USED WITH THE EROSION CONTROL SUMMARIES, PAY ITEMS, & NOTES.

EROSION AND SEDIMENT CONTROLS

SOIL STABILIZATION PRACTICES:

- X TEMPORARY SEEDING
- X PERMANENT SODDING, SPRIGGING OR SEEDING
- X VEGETATIVE MULCHING
- ___ SOIL RETENTION BLANKET
- X PRESERVATION OF EXISTING VEGETATION

NOTE: TEMPORARY EROSION CONTROL METHODS MUST BE USED ON ALL DISTURBED AREAS WHERE CONSTRUCTION ACTIVITIES HAVE CEASED FOR OVER 14 DAYS. METHODS USED WILL BE AS SHOWN ON PLANS, OR AS DIRECTED BY THE ENGINEER.

STRUCTURAL PRACTICES:

- ___ STABILIZED CONSTRUCTION EXIT
- X TEMPORARY SILT FENCE
- X TEMPORARY SILT DIKES
- ___ TEMPORARY FIBER LOG
- ___ DIVERSION, INTERCEPTOR OR PERIMETER DIKES
- ___ DIVERSION, INTERCEPTOR OR PERIMETER SWALES
- ___ ROCK FILTER DAMS
- ___ TEMPORARY SLOPE DRAIN
- X PAVED DITCH W/ DITCH LINER PROTECTION
- ___ TEMPORARY DIVERSION CHANNELS
- ___ TEMPORARY SEDIMENT BASINS
- ___ TEMPORARY SEDIMENT TRAPS
- ___ TEMPORARY SEDIMENT FILTERS
- X TEMPORARY SEDIMENT REMOVAL
- ___ RIP RAP
- X INLET SEDIMENT FILTER
- ___ TEMPORARY BRUSH SEDIMENT BARRIERS
- ___ SANDBAG BERMS
- ___ TEMPORARY STREAM CROSSINGS

OFFSITE VEHICLE TRACKING:

- X HAUL ROADS DAMPENED FOR DUST CONTROL
- X LOADED HAUL TRUCKS TO BE COVERED WITH TARPAULIN
- X EXCESS DIRT ON ROAD REMOVED DAILY

NOTES:

NO DISTURBED AREA TO A COMMON OUTFALL EXCEEDS 10 ACRES.

THE CONTRACTOR SHALL ALSO BE RESPONSIBLE FOR THE FOLLOWING:

MAINTENANCE AND INSPECTION:

ALL EROSION AND SEDIMENT CONTROLS WILL BE MAINTAINED IN GOOD WORKING ORDER FROM THE BEGINNING OF CONSTRUCTION UNTIL AN ACCEPTABLE VEGETATIVE COVER IS ESTABLISHED. INSPECTION BY THE CONTRACTOR AND ANY NECESSARY REPAIRS SHALL BE PERFORMED ONCE EVERY 7 CALENDAR DAYS AND WITHIN 24 HOURS AFTER ANY STORM EVENT GREATER THAN 0.5 INCH AS RECORDED BY A NON-FREEZING RAIN GAUGE TO BE LOCATED ON SITE. POTENTIALLY ERODIBLE AREAS, DRAINAGEWAYS, MATERIAL STORAGE, STRUCTURAL DEVICES, CONSTRUCTION ENTRANCES AND EXITS ALONG WITH EROSION AND SEDIMENT CONTROL LOCATIONS ARE EXAMPLES OF SITES THAT NEED TO BE INSPECTED.

WASTE MATERIALS:

PROPER MANAGEMENT AND DISPOSAL OF CONSTRUCTION WASTE MATERIAL IS REQUIRED BY THE CONTRACTOR. MATERIALS INCLUDE STOCKPILES, SURPLUS, DEBRIS AND ALL OTHER BY-PRODUCTS FROM THE CONSTRUCTION PROCESS. PRACTICES INCLUDE DISPOSAL, PROPER MATERIALS HANDLING, SPILL PREVENTION AND CLEANUP MEASURES. CONTROLS AND PRACTICES SHALL MEET THE REQUIREMENTS OF ALL FEDERAL, STATE AND LOCAL AGENCIES.

HAZARDOUS MATERIALS:

PROPER MANAGEMENT AND DISPOSAL OF HAZARDOUS WASTE MATERIALS IS REQUIRED. THE CONTRACTOR IS RESPONSIBLE FOR FOLLOWING MANUFACTURER'S RECOMMENDATIONS, STATE AND FEDERAL REGULATIONS TO ENSURE CORRECT HANDLING, DISPOSAL, SPILL PREVENTION AND CLEANUP MEASURES. EXAMPLES INCLUDE BUT ARE NOT LIMITED TO: PAINTS, ACIDS, CLEANING SOLVENTS, CHEMICAL ADDITIVES, CONCRETE CURING COMPOUNDS AND CONTAMINATED SOILS.

GENERAL NOTES:

A STORM WATER POLLUTION PREVENTION PLAN (SWPPP) IS REQUIRED TO COMPLY WITH THE OKLAHOMA POLLUTION DISCHARGE ELIMINATION SYSTEM (OPDES) REGULATIONS. THIS PLAN IS INITIATED DURING THE DESIGN PHASE, CONFIRMED IN THE PRE-WORK MEETINGS AND AVAILABLE ON THE JOB SITE ALONG WITH COPIES OF THE NOTICE OF INTENT (NOI) FORM AND PERMIT CERTIFICATE THAT HAVE BEEN FILED WITH THE OKLAHOMA DEPARTMENT OF ENVIRONMENTAL QUALITY (ODEQ). THE PLAN MUST BE KEPT CURRENT WITH UP-TO-DATE AMENDMENTS DURING THE PROGRESSION OF THE PROJECT. ALL CONTRACTOR OFF-SITE OPERATIONS ASSOCIATED WITH THE PROJECT MUST BE DOCUMENTED IN THE SWPPP, I.E. BORROW PITS, WORK ROADS, DISPOSAL SITES, ASPHALT/CONCRETE PLANTS, ETC. THE BASIC GOAL OF STORM WATER MANAGEMENT IS TO IMPROVE WATER QUALITY BY REDUCING POLLUTANTS IN STORM WATER DISCHARGES. RUNOFF FROM CONSTRUCTION SITES HAS A POTENTIAL FOR POLLUTION DUE TO EXPOSED SOILS AND THE PRESENCE OF HAZARDOUS MATERIALS USED IN THE CONSTRUCTION PROCESS. THE PREVENTION OF SOIL EROSION, CONTAINMENT OF HAZARDOUS MATERIALS AND/OR THE INTERCEPTION OF THESE POLLUTANTS BEFORE LEAVING THE CONSTRUCTION SITE ARE THE BEST PRACTICES FOR CONTROLLING STORM WATER POLLUTION.

THE FOLLOWING SECTIONS OF THE 2009 ODOT STANDARD SPECIFICATIONS SHOULD BE NOTED:

103.05	BONDING REQUIREMENTS
104.10	FINAL CLEANING UP
104.12	CONTRACTOR'S RESPONSIBILITY FOR WORK
104.13	ENVIRONMENTAL PROTECTION
106.08	STORAGE AND HANDLING OF MATERIAL
107.01	LAWS, RULES AND REGULATIONS TO BE OBSERVED
107.20	STORM WATER MANAGEMENT
220	MANAGEMENT OF EROSION, SEDIMENTATION AND STORM WATER POLLUTION PREVENTION AND CONTROL
221	TEMPORARY SEDIMENT CONTROL

IN ADDITION:
"ODEQ GENERAL PERMIT (OKR10) FOR STORM WATER DISCHARGES FROM CONSTRUCTION ACTIVITIES WITHIN THE STATE OF OKLAHOMA." ODEQ, WATER QUALITY DIVISION, SEPTEMBER 13, 2017.

REGISTERED PROFESSIONAL ENGINEER RODNEY D. SEWELL 16173 OKLAHOMA
9/17/21

Design	CKE	
Drawn	CKD	
Checked	CKE	
Approved		
Squad	C & K	

INTERCHANGE (OPERATIONAL IMPROVEMENTS) TULSA COUNTY

STORM WATER MANAGEMENT PLAN

JOB PIECE NO. 10981(05) SHEET NO. R001

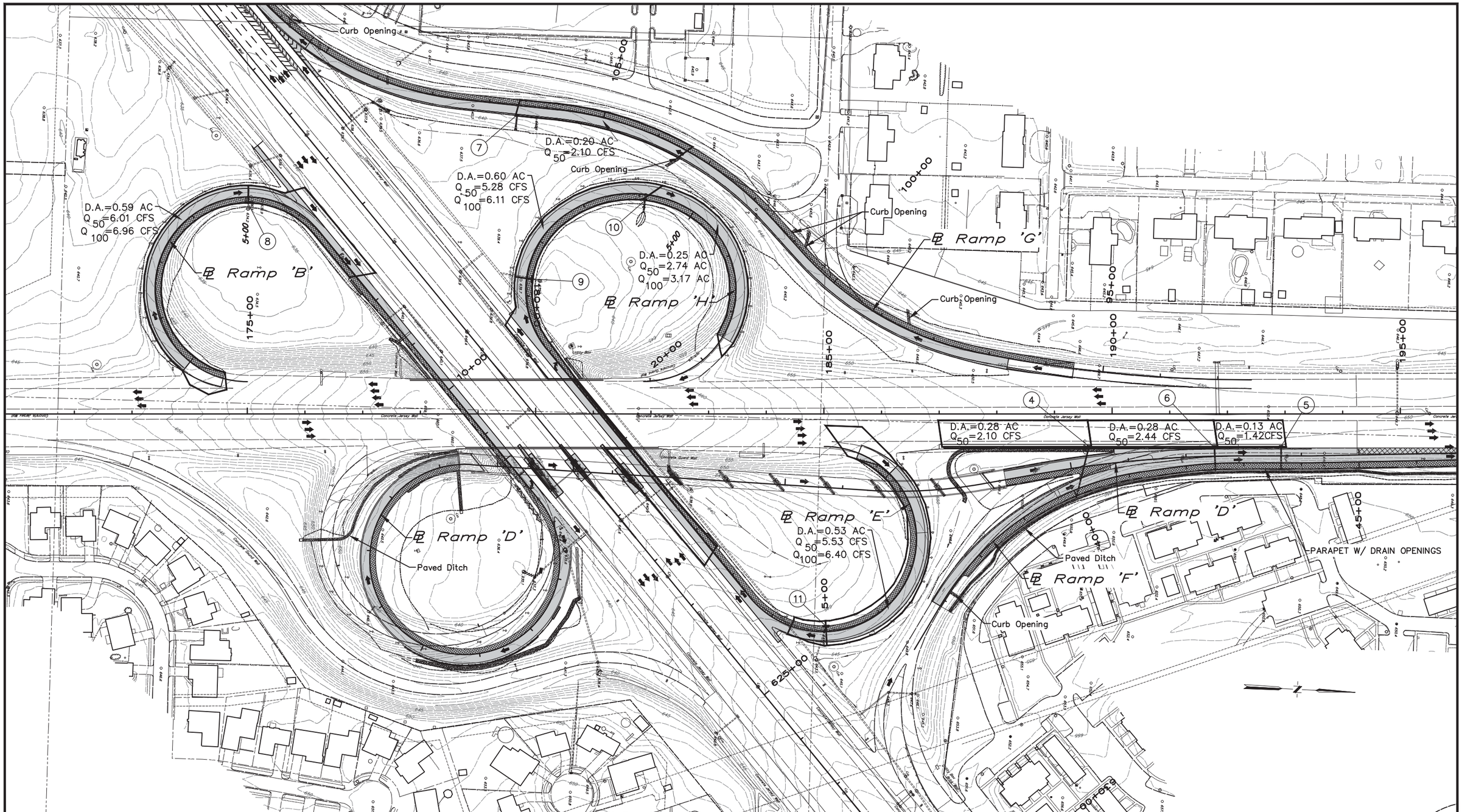

DRAINAGE MAP

REGISTERED PROFESSIONAL ENGINEER
RODNEY SEWELL
16173
OKLAHOMA
9/17/21

The Drainage Map is to be used in conjunction with the Storm Water Management Plan. The Drainage Map displays the drainage characteristics.

Survey	CKS		INTERCHANGE (OPERATIONAL IMPROVEMENTS)	TULSA COUNTY
Drawn	CKD		DRAINAGE MAP	
Checked	CKE			
Approved				
Squad	C & K		JOB PIECE NO. 10981(05)	SHEET NO. R002

S:\Projects\ODOT\2015 EC-1710 I-44-169 Interchange\ACAD\PS&E\Plans\R002-10981(05)-Drainage Map.dwg, R007, 9/17/2021 3:08:49 PM

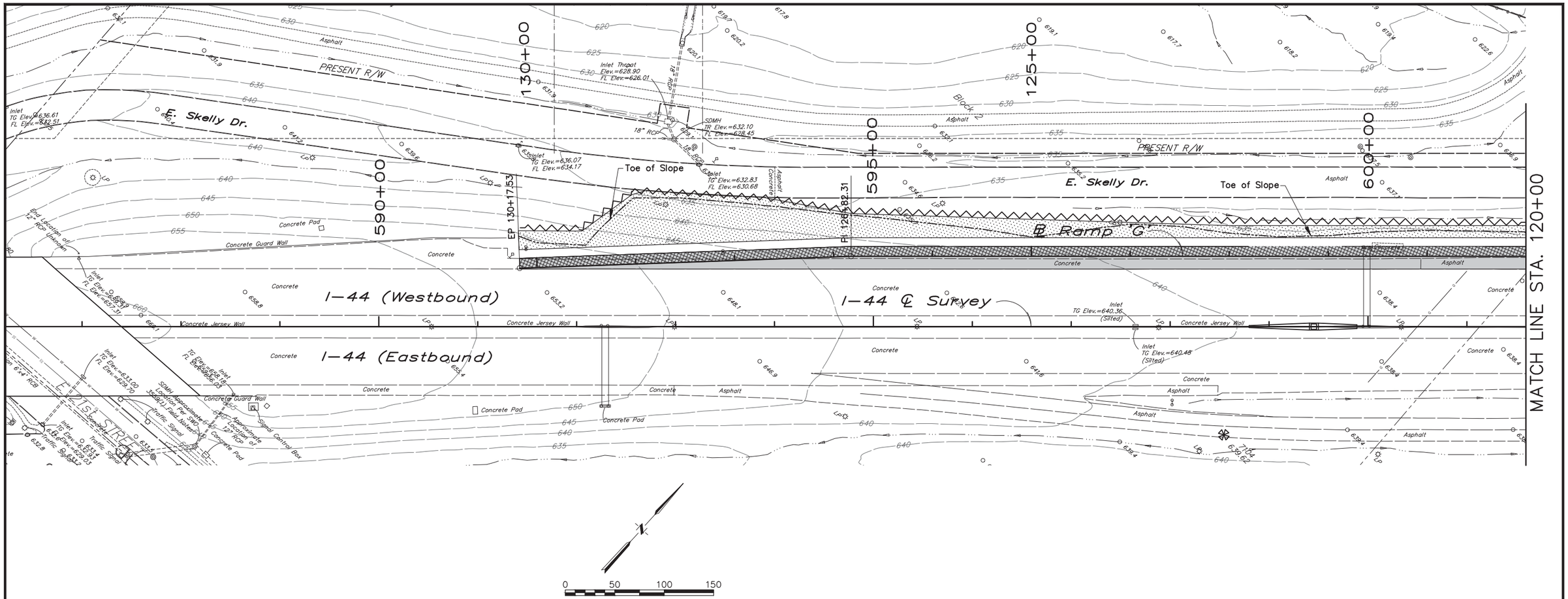

LEGEND

- SILT DIKE (EST. AT 16 LF EA)
- SILT FENCE
- FIBER LOG TEMPORARY INLET PROTECTION (EST. AT 56 LF EA)
- INDICATES SLAB SOD
- INDICATES SLAB SOD STAGING AREA
- INDICATES PAVED DITCH OR CHANNEL

REGISTERED PROFESSIONAL ENGINEER
RONNIE D. SEWELL
16173
OKLAHOMA
9/17/21

Survey	CKS	
Drawn	CKD	
Checked	CKE	
Approved		
Squad	C & K	

INTERCHANGE (OPERATIONAL IMPROVEMENTS) TULSA COUNTY

EROSION CONTROL DETAILS
RAMP "G"

JOB PIECE NO. 10981(05) SHEET NO. R003

S:\Projects\ODOT\2015 EC-1710 I-44-169 Interchange\ACAD\PS&E\Plans\R003-R007-1098105-Erosion Control Details.dwg, R003, 9/17/2021 3:08:54 PM

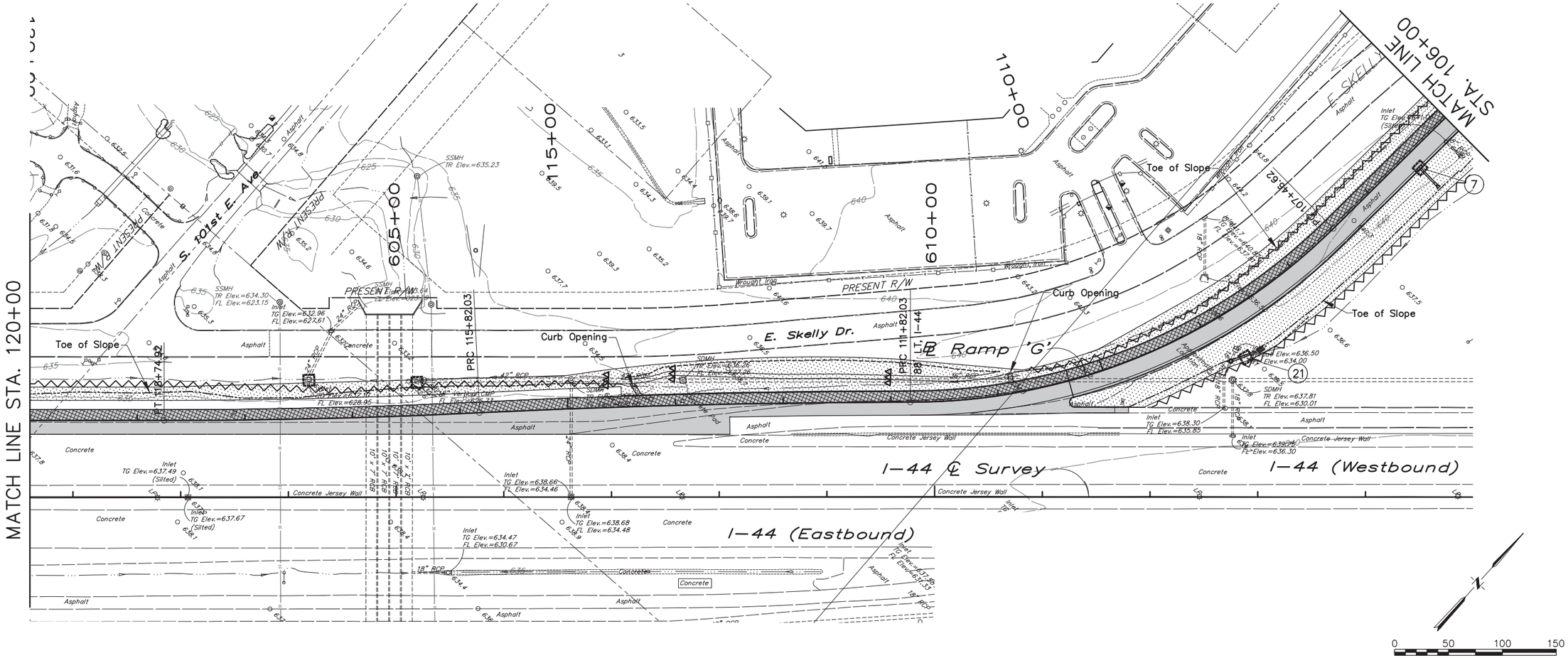

LEGEND

- SILT DIKE (EST. AT 16 LF EA)
- SILT FENCE
- FIBER LOG TEMPORARY INLET PROTECTION (EST. AT 56 LF EA)
- INDICATES SLAB SOD
- INDICATES SLAB SOD STAGING AREA
- INDICATES PAVED DITCH OR CHANNEL

RONALD SEWELL 16173 OKLAHOMA PROFESSIONAL ENGINEER
9/17/21

Survey	CKS	
Drawn	CKD	
Checked	CKE	
Approved		
Squad	C & K	

INTERCHANGE (OPERATIONAL IMPROVEMENTS) TULSA COUNTY

EROSION CONTROL DETAILS
RAMP "G"

JOB PIECE NO. 10981(05) SHEET NO. R004

S:\Projects\ODOT\2015 EC-1710 I-44-169 Interchange\ACAD\PS&E\Plans\R003-R007-1098105-Erosion Control Details.dwg, R004, 9/17/2021 3:09:07 PM

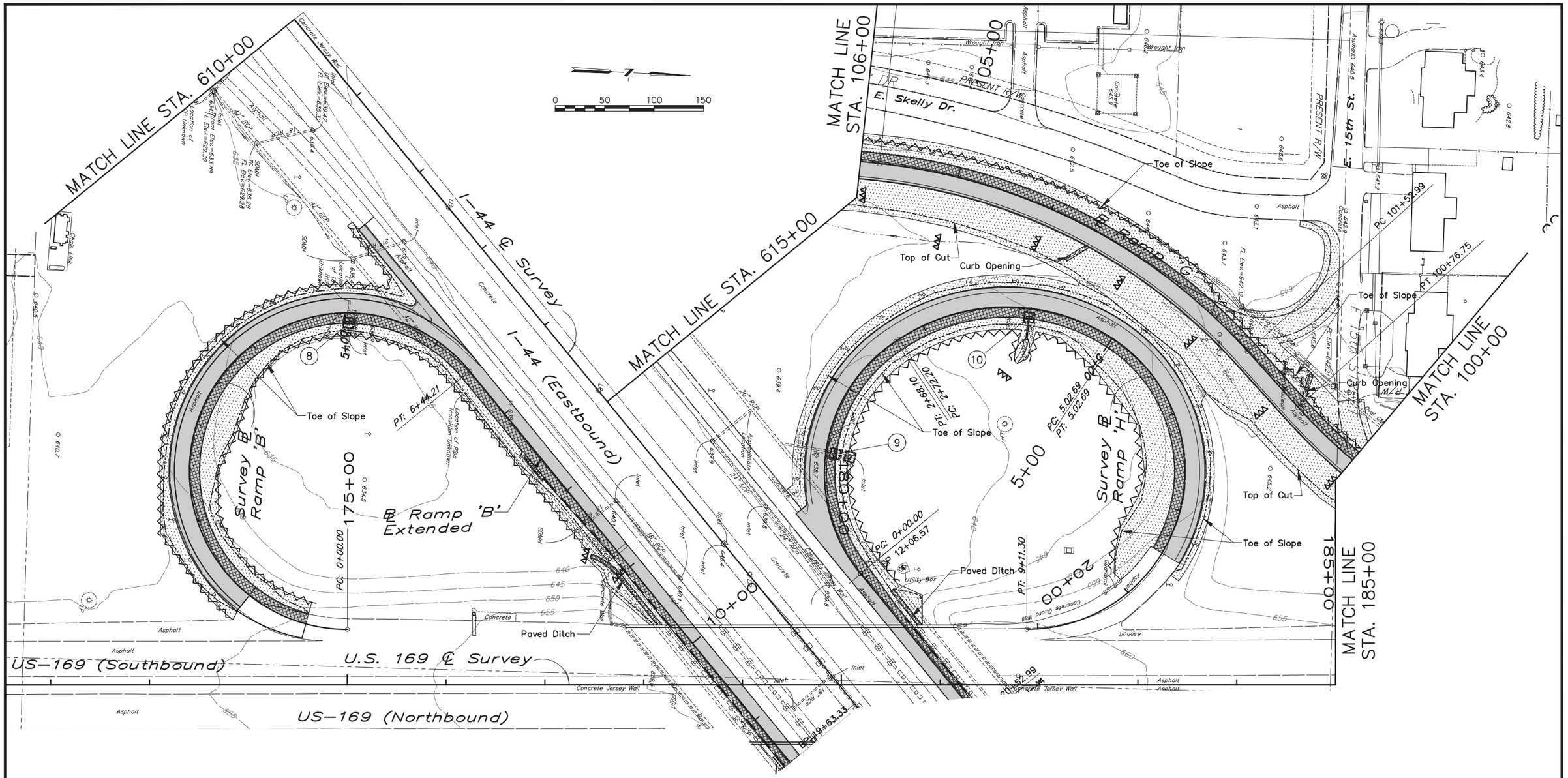

LEGEND

- SILT DIKE (EST. AT 16 LF EA)
- SILT FENCE
- FIBER LOG TEMPORARY INLET PROTECTION (EST. AT 56 LF EA)
- INDICATES SLAB SOD
- INDICATES SLAB SOD STAGING AREA
- INDICATES PAVED DITCH OR CHANNEL

REGISTERED PROFESSIONAL ENGINEER
ROBERT B. SEWELL
16173
OKLAHOMA
9/17/21

Survey	CKS	
Drawn	CKD	
Checked	CKE	
Approved		
Squad	C & K	

INTERCHANGE (OPERATIONAL IMPROVEMENTS) TULSA COUNTY

EROSION CONTROL DETAILS
RAMP "B", "G", & "H"

JOB PIECE NO. 10981(05) SHEET NO. R005

S:\Projects\ODOT\2015 EC-1710 I-44-169 Interchange\ACAD\PS&E\Plans\R003-R007-10981(05)-Erosion Control Details.dwg, R005, 9/17/2021 3:09:12 PM

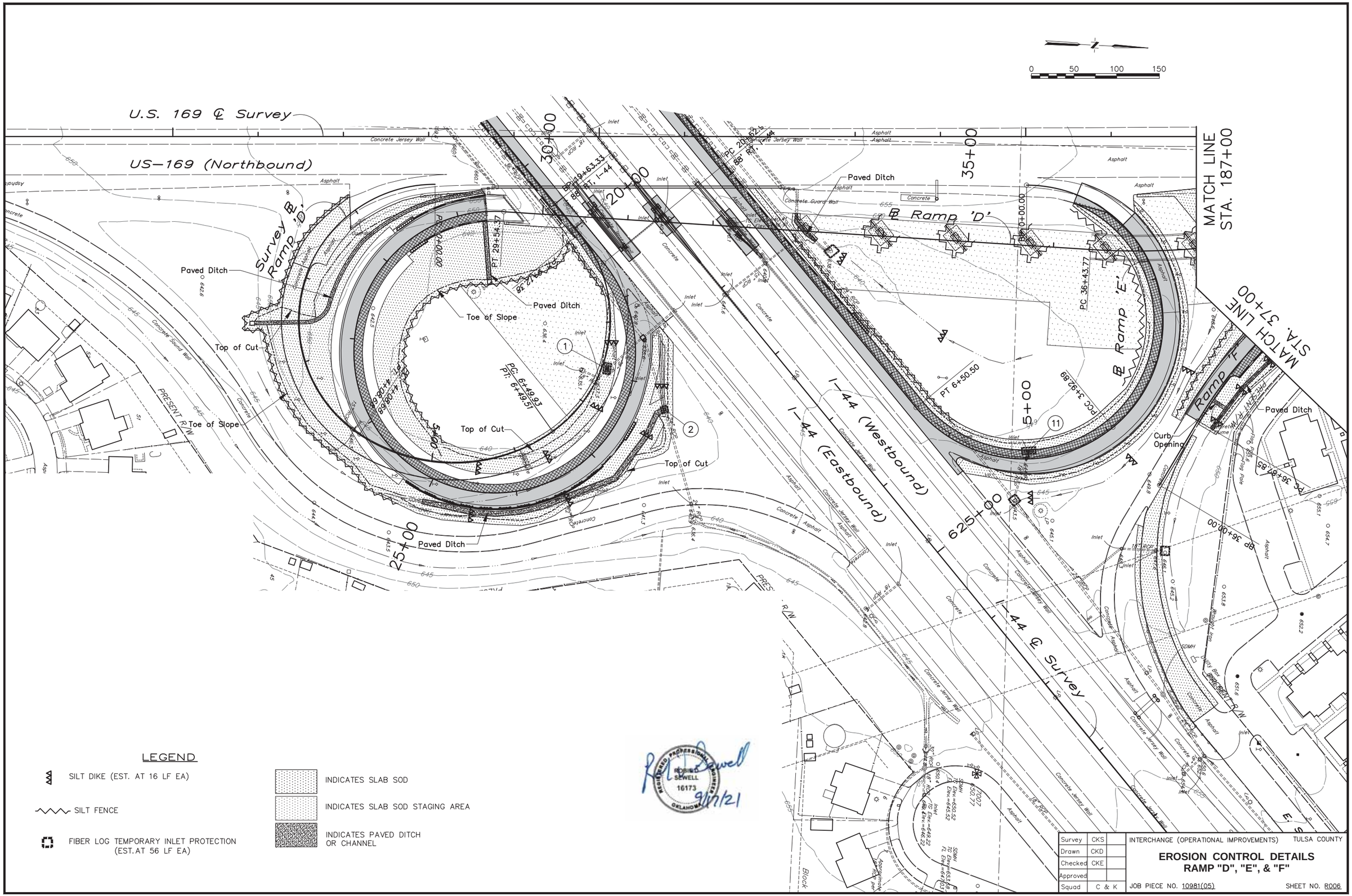

LEGEND

- SILT DIKE (EST. AT 16 LF EA)
- SILT FENCE
- FIBER LOG TEMPORARY INLET PROTECTION (EST. AT 56 LF EA)
- INDICATES SLAB SOD
- INDICATES SLAB SOD STAGING AREA
- INDICATES PAVED DITCH OR CHANNEL

Survey	CKS	
Drawn	CKD	
Checked	CKE	
Approved		
Squad	C & K	

INTERCHANGE (OPERATIONAL IMPROVEMENTS) TULSA COUNTY

EROSION CONTROL DETAILS
RAMP "D", "E", & "F"

JOB PIECE NO. 10981(05) SHEET NO. R006

S:\Projects\ODOT\2015 EC-1710 I-44-169 Interchange\ACAD\PS&E\Plans\R003-R007-1098105-Erosion Control Details.dwg, R006, 9/17/2021 3:08:57 PM

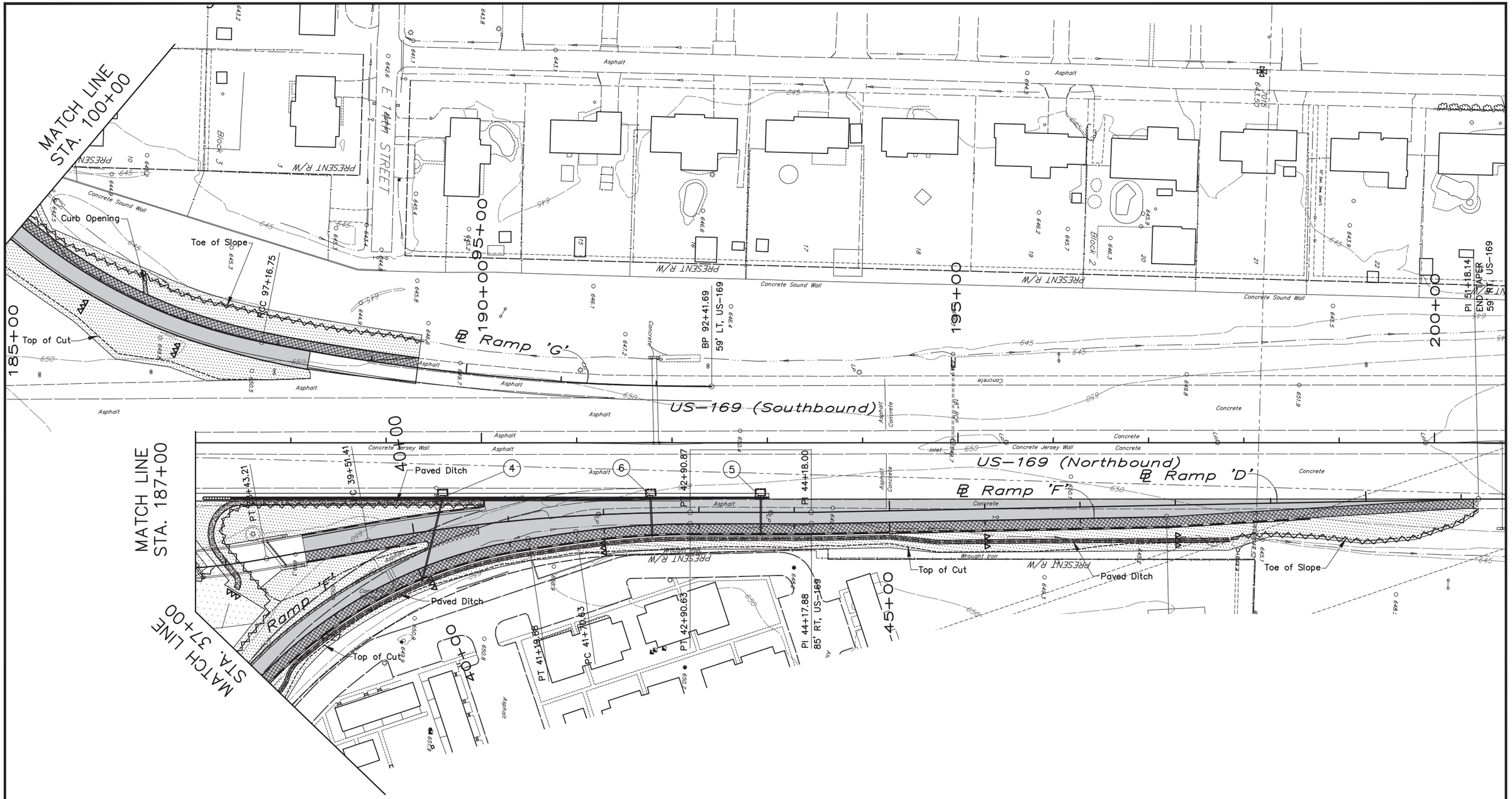

LEGEND

- SILT DIKE (EST. AT 16 LF EA)
- SILT FENCE
- FIBER LOG TEMPORARY INLET PROTECTION (EST. AT 56 LF EA)
- INDICATES SLAB SOD
- INDICATES SLAB SOD STAGING AREA
- INDICATES PAVED DITCH OR CHANNEL

0 50 100 150

REGISTERED PROFESSIONAL ENGINEER
RONALD SEWELL
16173
OKLAHOMA
9/17/21

Survey	CKS	
Drawn	CKD	
Checked	CKE	
Approved		
Squad	C & K	

INTERCHANGE (OPERATIONAL IMPROVEMENTS) TULSA COUNTY

EROSION CONTROL DETAILS
RAMP "F", "D" & "G"

JOB PIECE NO. 10981(05) SHEET NO. R007

S:\Projects\ODOT\2015 EC-1710 I-44-169 Interchange\ACAD\PS&E\Plans\R003-R007-109810S-Erosion Control Details.dwg, R007, 9/17/2021 3:09:02 PM

UTILITIES		
OWNER	ADDRESS	PHONE NUMBER
CITY OF TULSA	2317 S. JACKSON AVE. TULSA, OK 74107	918-596-9565
AEP-PSO	5220 S. GARNETT RD. TULSA, OK 74146	918-250-6211
MBO	101 N CIMARRON MANNFORD, OK 74044	877-777-8941
ONG	PO BOX 219296 KANSAS CITY, MO 64121-9296	800-664-5463

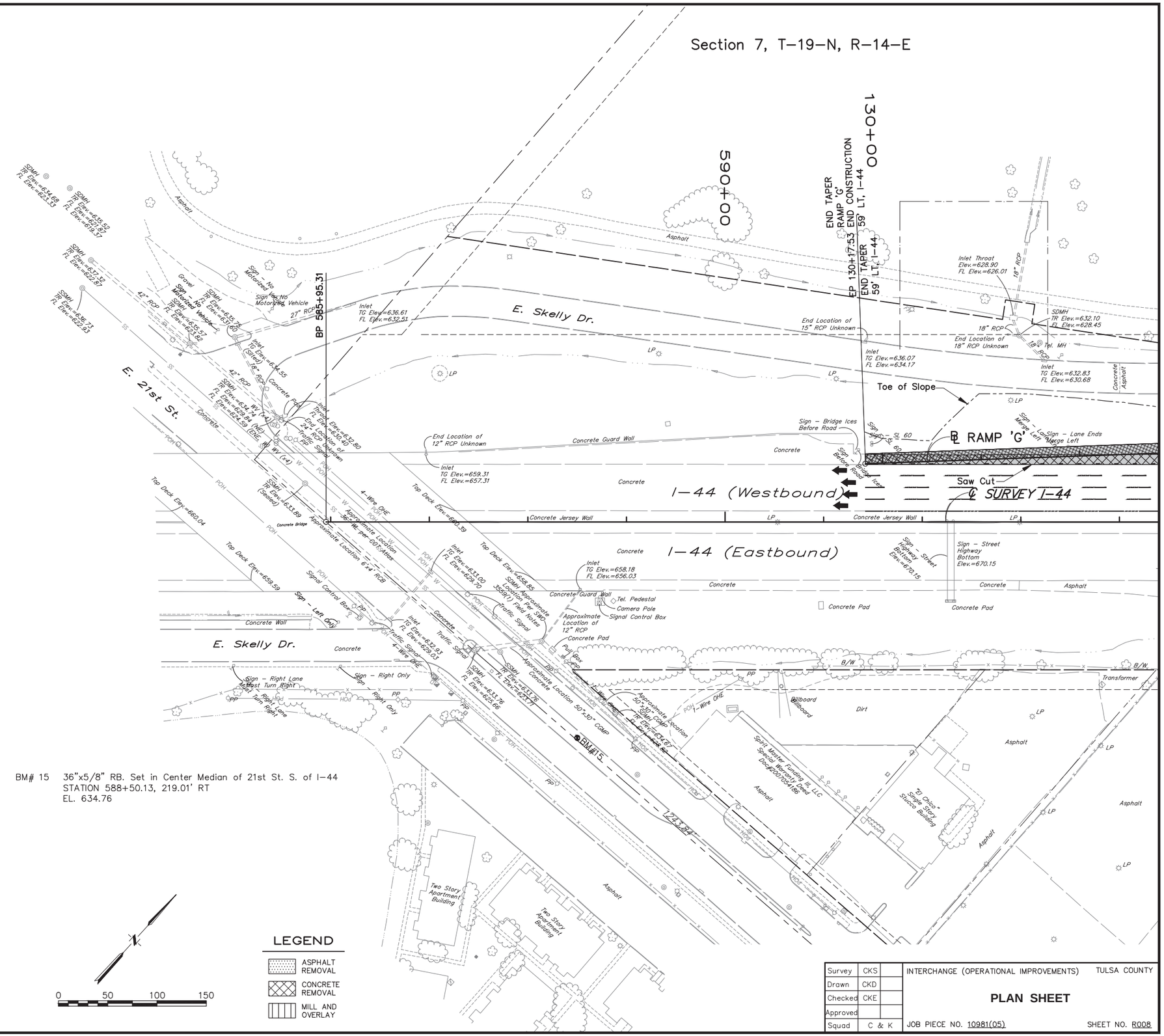

BM# 15 36"x5/8" RB. Set in Center Median of 21st St. S. of I-44
STATION 588+50.13, 219.01' RT
EL. 634.76

0 50 100 150

LEGEND

- ASPHALT REMOVAL
- CONCRETE REMOVAL
- MILL AND OVERLAY

ROBERT L. SEWELL 16173 REGISTERED PROFESSIONAL ENGINEER OKLAHOMA
9/17/21

Survey	CKS	
Drawn	CKD	
Checked	CKE	
Approved		
Squad	C & K	

INTERCHANGE (OPERATIONAL IMPROVEMENTS) TULSA COUNTY

PLAN SHEET

JOB PIECE NO. 10981(05) SHEET NO. R008

S:\Projects\ODOT\2015 EC-1710 I-44-169 Interchange\ACAD\PS&E\Plans\R008-1098105-PLAN.dwg, R001, 9/17/2021 3:09:18 PM

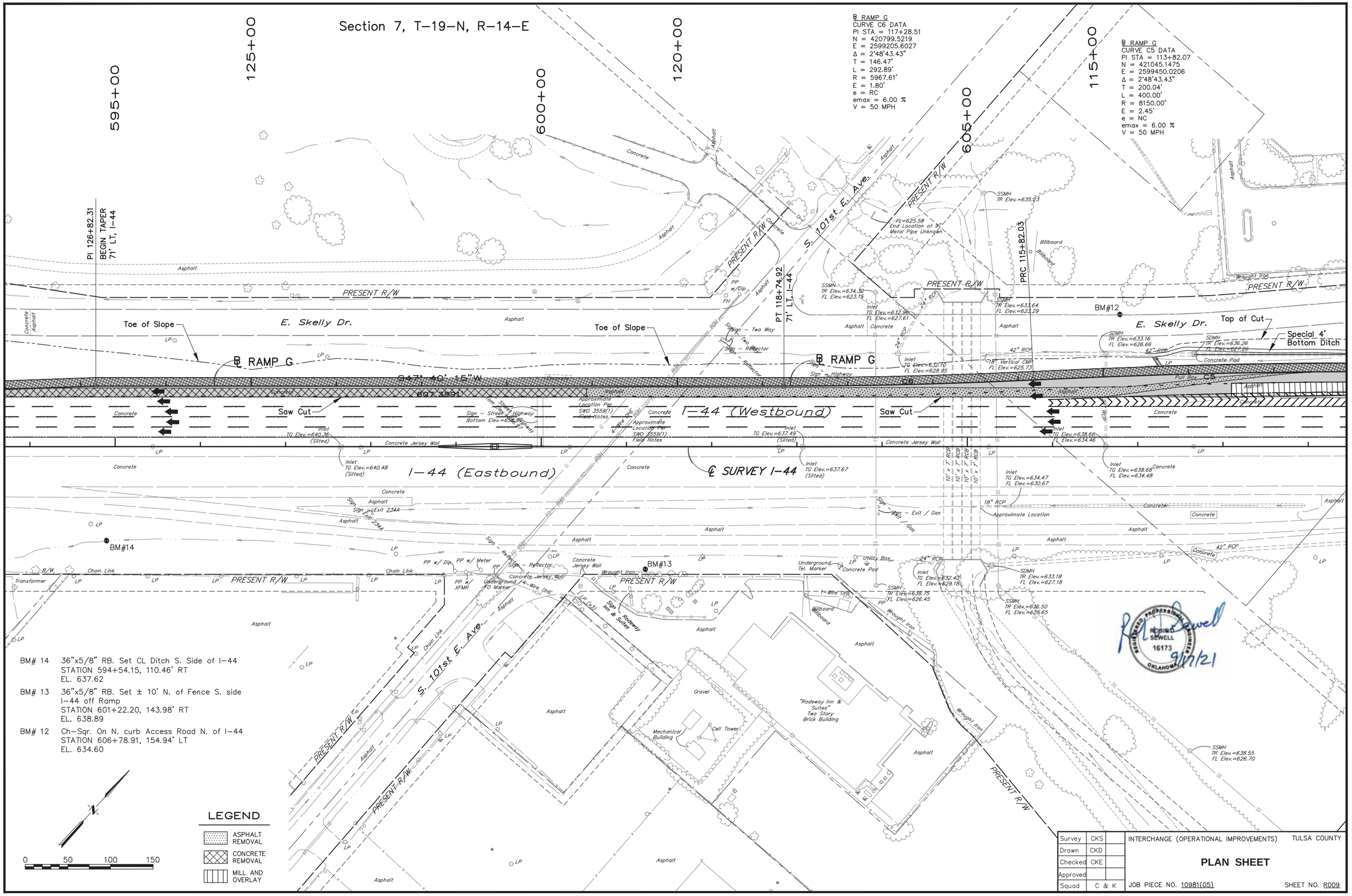

BM# 14 36"x5/8" RB. Set CL Ditch S. Side of I-44
STATION 594+54.15, 110.46' RT
EL. 637.62

BM# 13 36"x5/8" RB. Set ± 10' N. of Fence S. side I-44 off Ramp
STATION 601+22.20, 143.98' RT
EL. 638.89

BM# 12 Ch-Sqr. On N. curb Access Road N. of I-44
STATION 606+78.91, 154.94' LT
EL. 634.60

Survey	CKS	
Drawn	CKD	
Checked	CKE	
Approved		
Squad	C & K	

INTERCHANGE (OPERATIONAL IMPROVEMENTS) TULSA COUNTY

PLAN SHEET

JOB PIECE NO. 10981(05) SHEET NO. R009

S:\Projects\ODOT\2015 EC-1710 I-44-169 Interchange\ACAD\PS&E\Plans\R009-10981(05)-PLAN.dwg, R002, 9/17/2021 3:09:23 PM

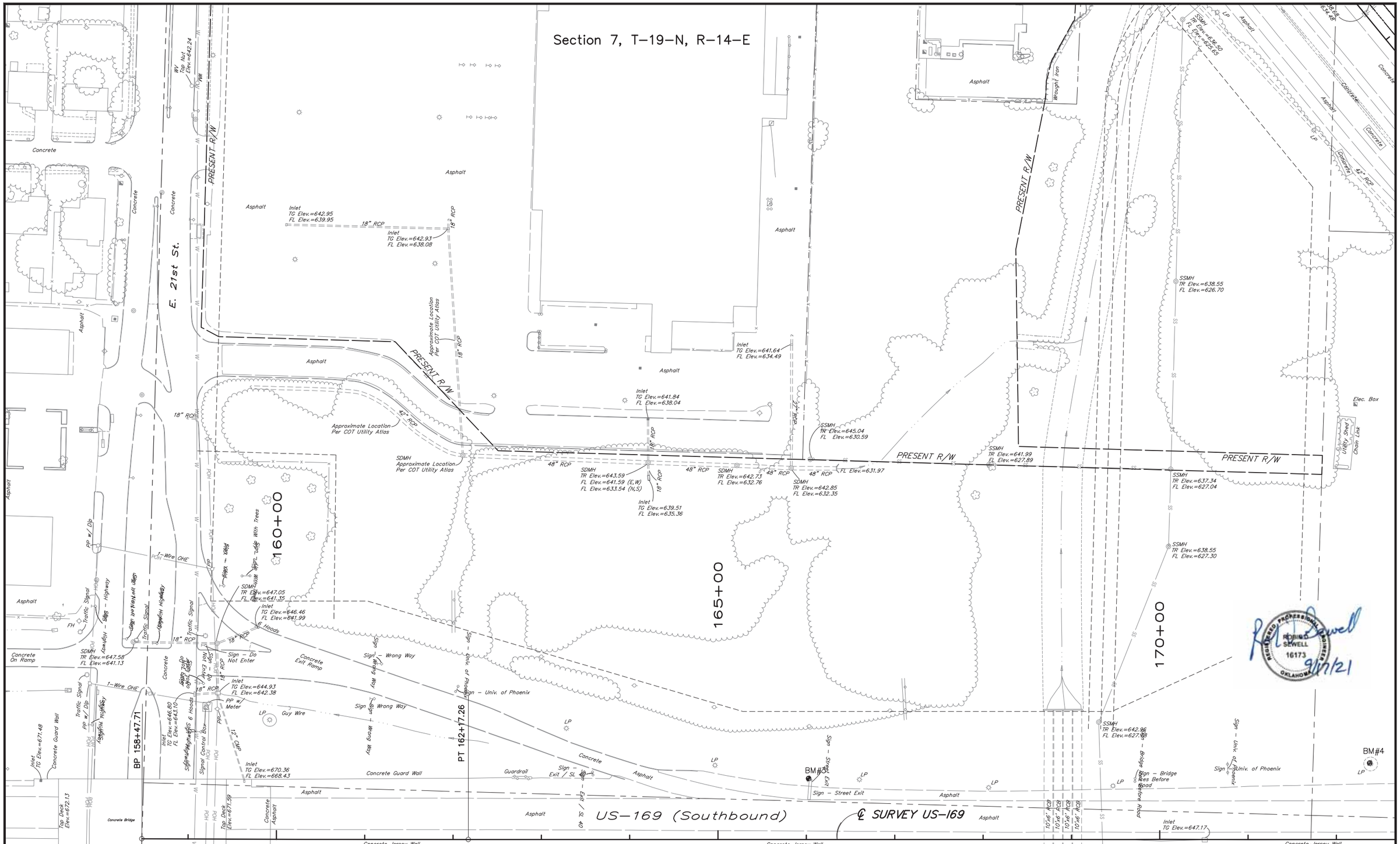

LEGEND

- ASPHALT REMOVAL
- CONCRETE REMOVAL
- MILL AND OVERLAY

0 50 100 150

BM# 3 Ch-Sqr. S.W. Cor. of Conc. Footing for 21st ST. sing W. of hwy 169
STATION 166+02.52, 68.96' LT
EL. 652.86

BM# 4 Mag Nail
STATION 172+37.87, 86.53' LT
EL. 646.18

Survey	CKS	
Drawn	CKD	
Checked	CKE	
Approved		
Squad	C & K	

INTERCHANGE (OPERATIONAL IMPROVEMENTS) TULSA COUNTY

PLAN SHEET

JOB PIECE NO. 10981(05) SHEET NO. R010

REGISTERED PROFESSIONAL ENGINEER ROBIN D. SEWELL 16173 OKLAHOMA 9/17/21

S:\Projects\ODOT\2015 EC-1710 I-44-169 Interchange\ACAD\PS&E\Plans\R010-109810S-PLAN.dwg, R003, 9/17/2021 3:09:28 PM

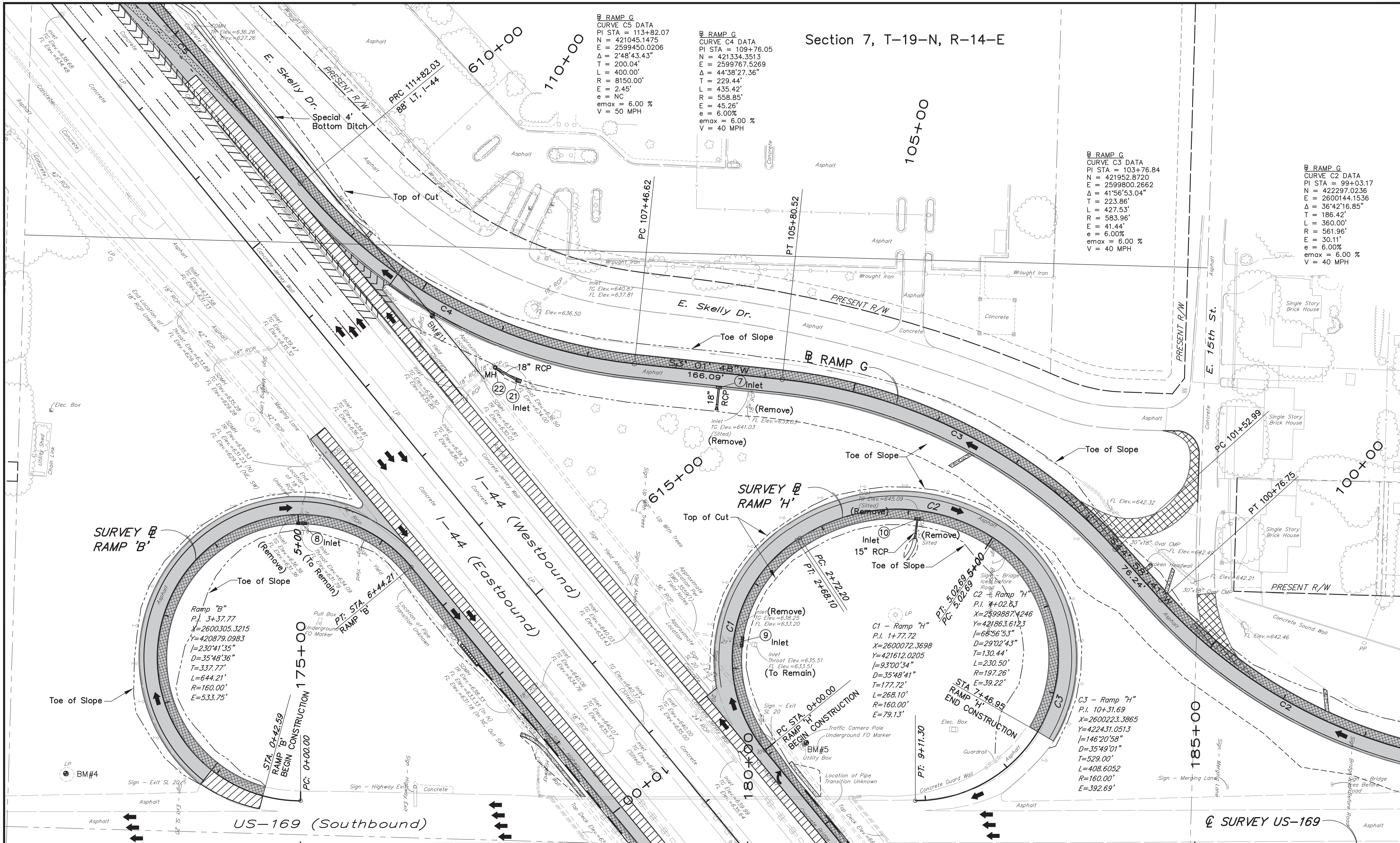

LEGEND

- ASPHALT REMOVAL
- CONCRETE REMOVAL
- MILL AND OVERLAY

0 50 100 150

BM# 4 Mag Nail
STATION 172+37.87 US-169, 86.53' LT
EL. 646.18

BM# 5 Ch-Sqr. N.W. side of conc. pad for ODOT cab. N. of I-44, W. of hwy 169
STATION 180+65.72 US-169, 120.83' LT
EL. 639.86

BM# 11 Ch-Sqr. on curb S. side of W. bound on ramp N. of I-44 W. hwy 169
STATION 611+85.66 US-169, 108.35' LT
EL. 638.72

ROBIN SEWELL 16173 REGISTERED PROFESSIONAL ENGINEER OKLAHOMA 9/17/21

Survey	CKS	INTERCHANGE (OPERATIONAL IMPROVEMENTS) TULSA COUNTY
Drawn	CKD	PLAN SHEET
Checked	CKE	
Approved		
Squad	C & K	JOB PIECE NO. 10981(05) SHEET NO. R011

S:\Projects\ODOT\2015 EC-1710 I-44-169 Interchange\ACAD\PS&E\Plans\R011-1098105-PLAN.dwg, R004, 9/17/2021 3:09:33 PM

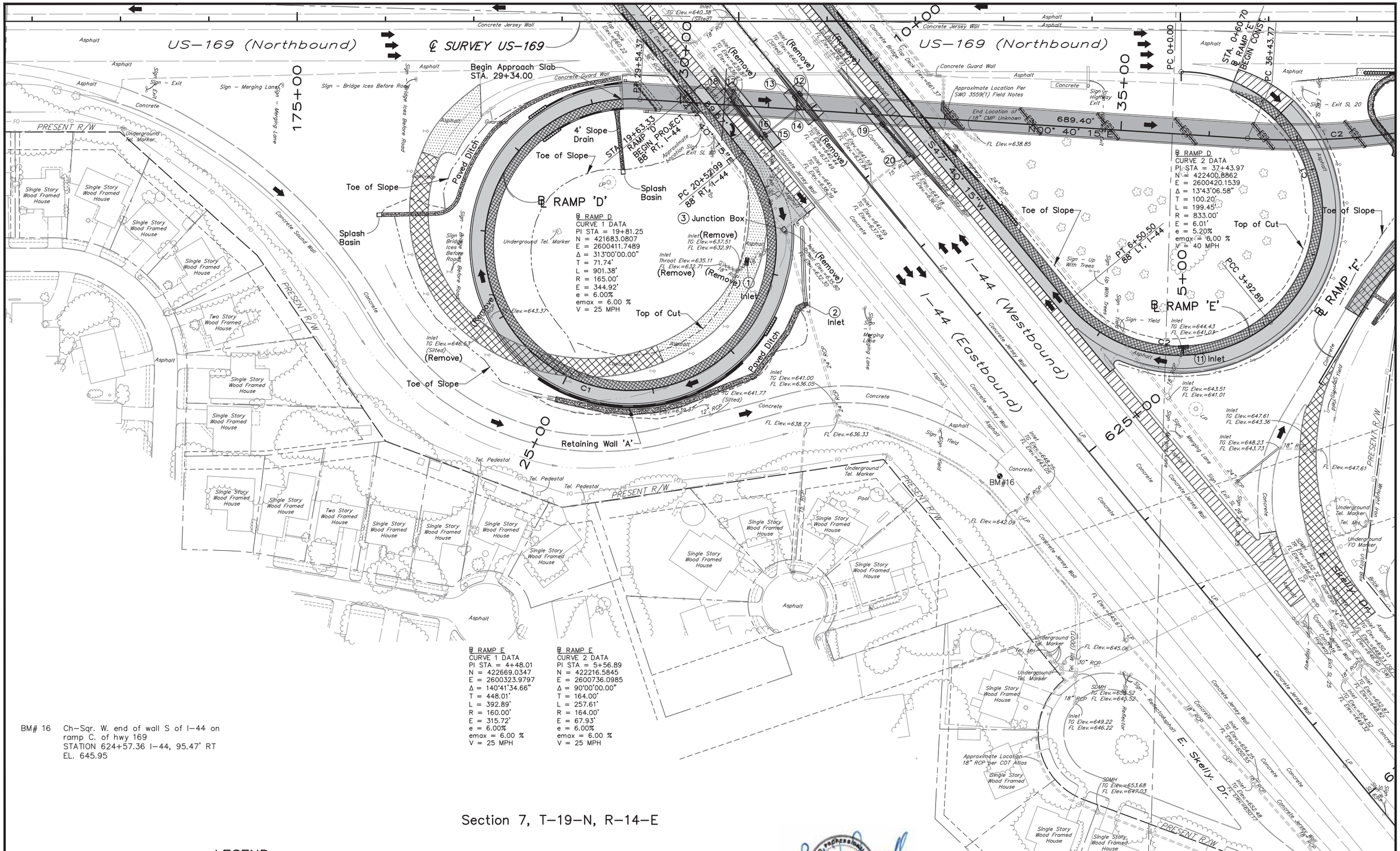

BM# 16 Ch-Sqr. W. end of wall S of I-44 on ramp C. of hwy 169
STATION 624+57.36 I-44, 95.47' RT
EL. 645.95

℄ RAMP E
CURVE 1 DATA
PI STA = 4+48.01
N = 422669.0347
E = 2600323.9797
Δ = 140°41'34.66"
T = 448.01'
L = 392.89'
R = 160.00'
E = 315.72'
e = 6.00%
emax = 6.00 %
V = 25 MPH

℄ RAMP E
CURVE 2 DATA
PI STA = 5+56.89
N = 422216.5845
E = 2600736.0985
Δ = 90°00'00.00"
T = 164.00'
L = 257.61'
R = 164.00'
E = 67.93'
e = 6.00%
emax = 6.00 %
V = 25 MPH

Section 7, T-19-N, R-14-E

LEGEND

- ASPHALT REMOVAL
- CONCRETE REMOVAL
- MILL AND OVERLAY

0 50 100 150

REGISTERED PROFESSIONAL ENGINEER ROBERT SEWELL 16173 OKLAHOMA
9/17/21

Survey	CKS		INTERCHANGE (OPERATIONAL IMPROVEMENTS) TULSA COUNTY
Drawn	CKD		PLAN SHEET
Checked	CKE		
Approved			
Squad	C & K		JOB PIECE NO. 10981(05) SHEET NO. R012

S:\Projects\ODOT\2015 EC-1710 I-44-169 Interchange\ACAD\PS&E\Plans\R012-109816-PLAN.dwg, R005, 9/17/2021 3:09:38 PM

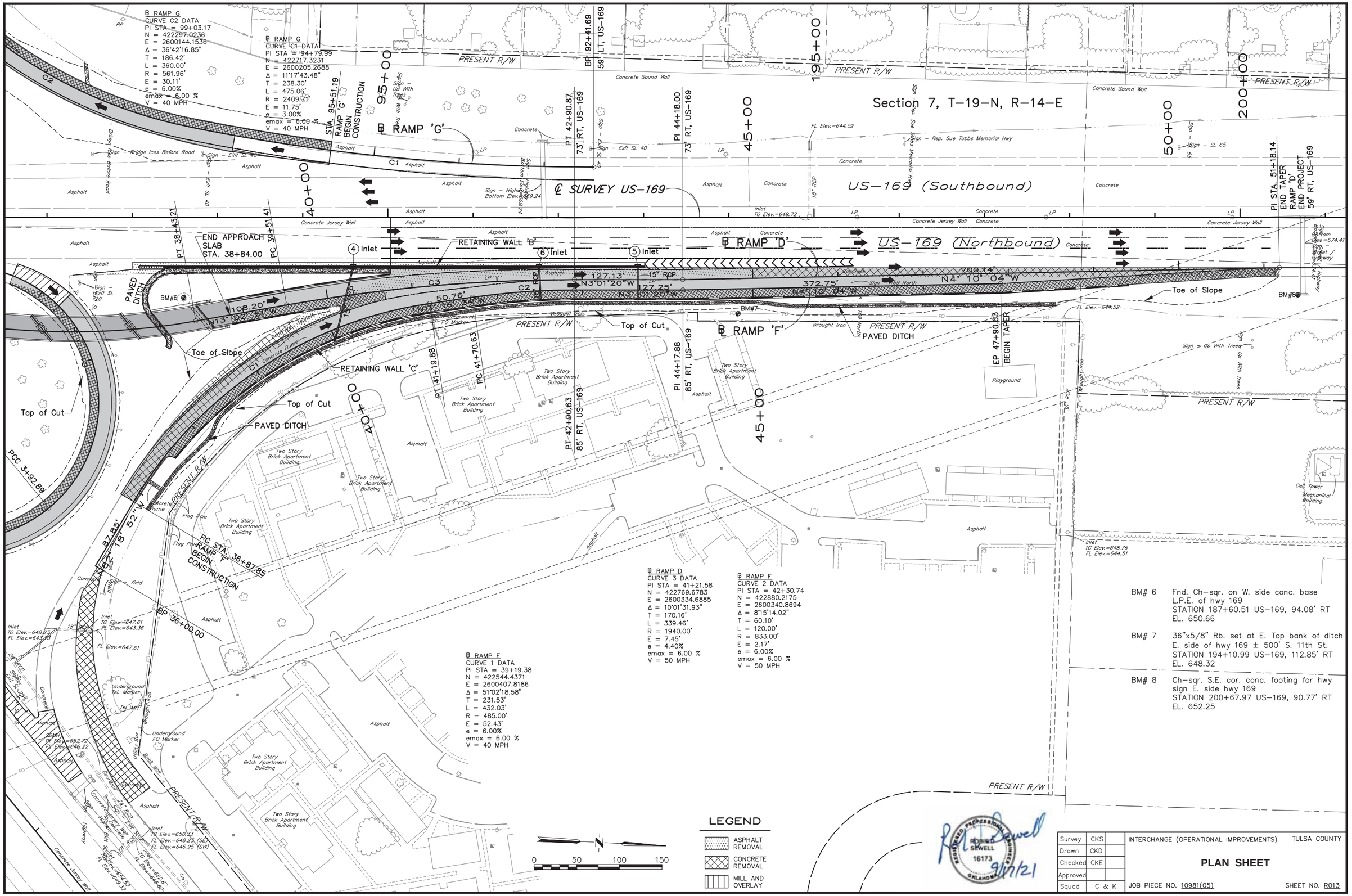

S:\Projects\ODOT\2015 EC-1710 I-44-169 Interchange\ACAD\PS&E\Plans\R013-10981(05)-PLAN.dwg, R006, 9/17/2021 3:09:43 PM

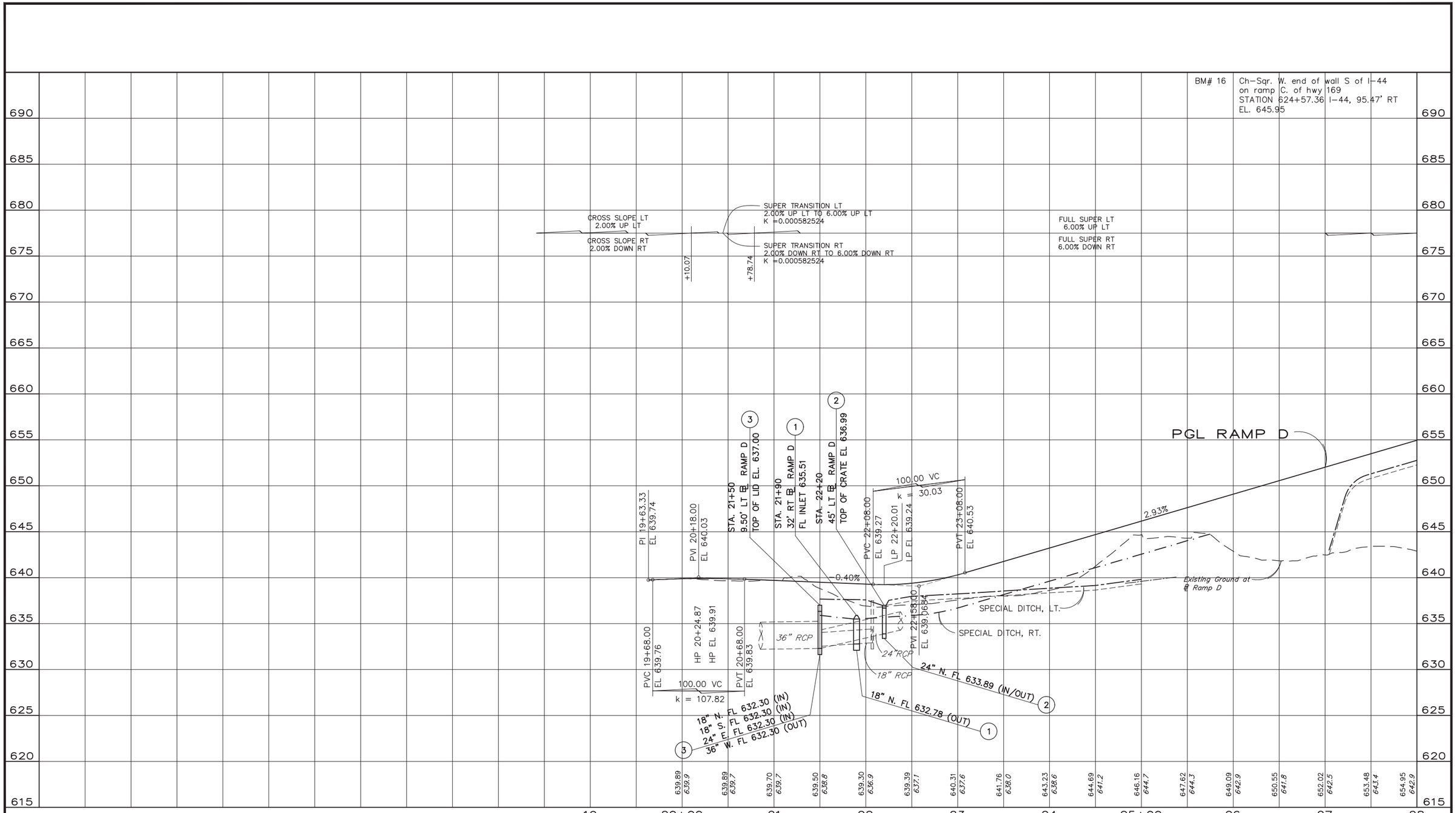

Design	CKS	
Drawn	CKD	
Checked	CKE	
Approved		
Squad	C & K	

INTERCHANGE (OPERATIONAL IMPROVEMENTS) TULSA COUNTY

PROFILE RAMP D

STA. 19+00.00 TO STA. 28+00.00

JOB PIECE NO. 10981(05) SHEET NO. R014

REGISTERED PROFESSIONAL ENGINEER ROBIN D. SEWELL 16173 OKLAHOMA

9/17/21

S:\Projects\ODOT\2015 EC-1710 I-44-169 Interchange\ACAD\PS&E\Plans\R014-R021-1098105-Profiles Ramp B,D,F,E & H,G.dwg, R014, 9/17/2021 3:10:22 PM

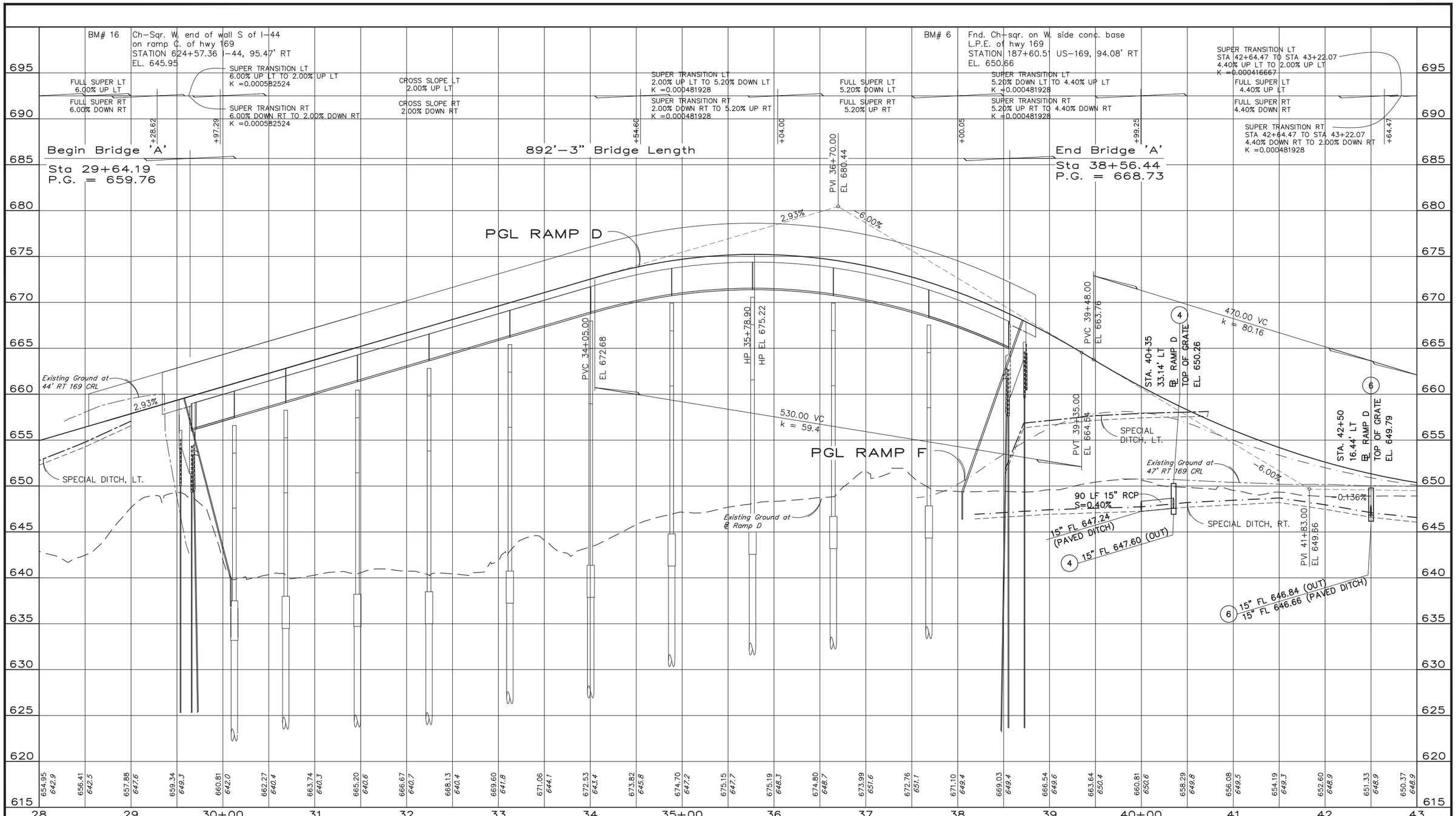

REGISTERED PROFESSIONAL ENGINEER
ROBERT D. SEWELL
16173
OKLAHOMA
9/17/21

Design	CKS	
Drawn	CKD	
Checked	CKE	
Approved		
Squad	C & K	

INTERCHANGE (OPERATIONAL IMPROVEMENTS) TULSA COUNTY

PROFILE RAMP D

STA. 28+00.00 TO STA. 43+00.00

JOB PIECE NO. 10981(05) SHEET NO. R015

S:\Projects\ODOT\2015 EC-1710 I-44-169 Interchange\ACAD\PS&E\Plans\R014-R021-1098105-Profiles Ramp B,D-F,E & H,G.dwg, R015, 9/17/2021 3:09:48 PM

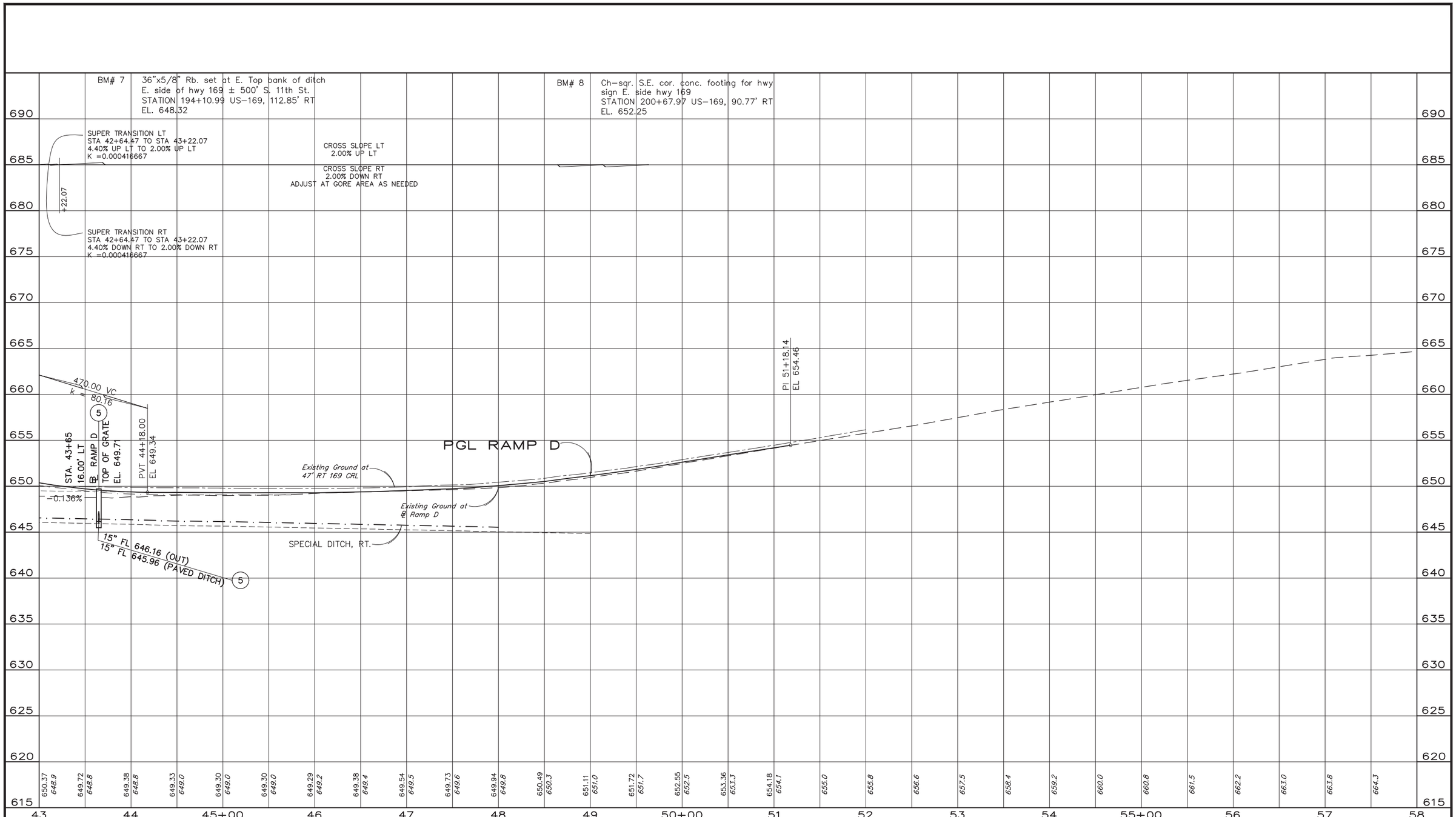

REGISTERED PROFESSIONAL ENGINEER
ROBERT D. SEWELL
16173
OKLAHOMA
9/17/21

Design	CKS	
Drawn	CKD	
Checked	CKE	
Approved		
Squad	C & K	

INTERCHANGE (OPERATIONAL IMPROVEMENTS) TULSA COUNTY

PROFILE RAMP D

STA. 43+00.00 TO STA. 58+00.00

JOB PIECE NO. 10981(05) SHEET NO. R016

S:\Projects\ODOT\2015 EC-1710 I-44-169 Interchange\ACAD\PS&E\Plans\R014-R021-1098105-Profiles Ramp B,D,F-E & H,G.dwg, R016, 9/17/2021 3:09:52 PM

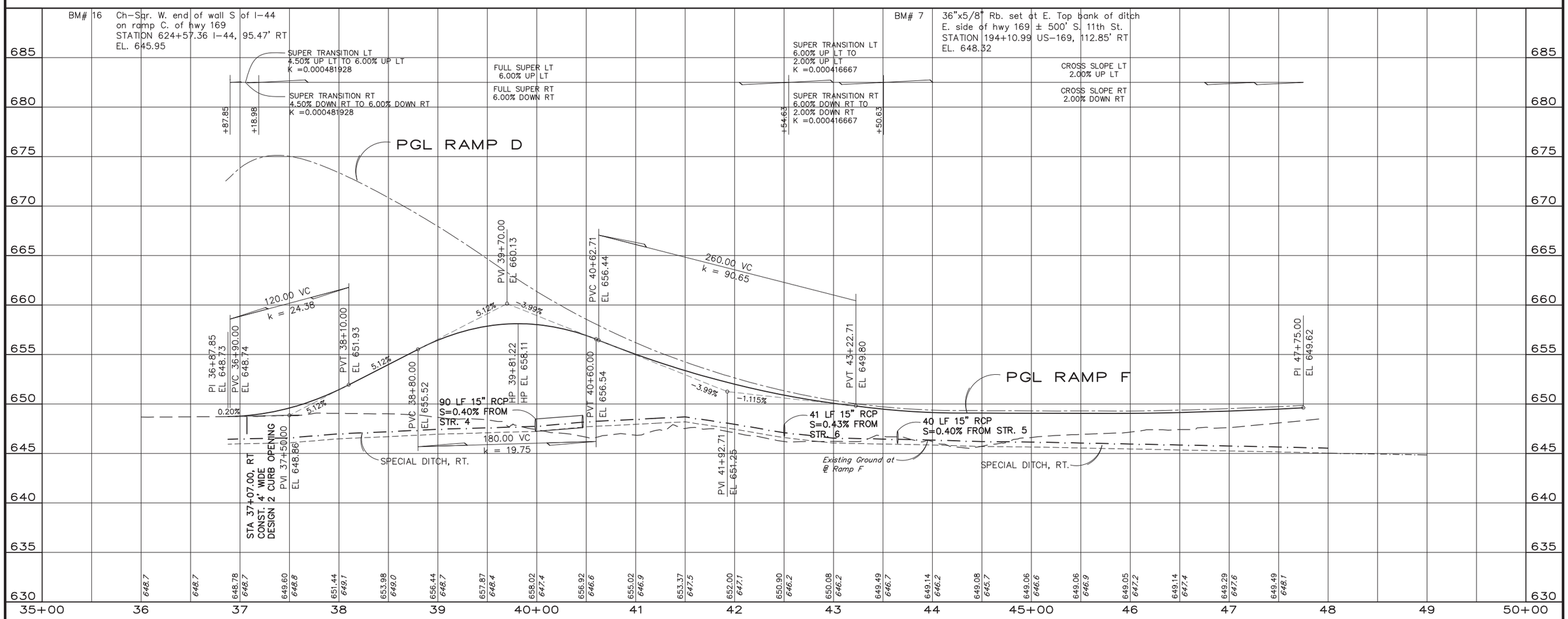

Design	CKS	
Drawn	CKD	
Checked	CKE	
Approved		
Squad	C & K	

INTERCHANGE (OPERATIONAL IMPROVEMENTS) TULSA COUNTY

PROFILE RAMP F

STA. 35+00.00 TO STA. 50+00.00

JOB PIECE NO. 10981(05) SHEET NO. R017

REGISTERED PROFESSIONAL ENGINEER ROBERT D. SEWELL 16173 OKLAHOMA

9/17/21

S:\Projects\ODOT\2015 EC-1710 I-44 169 Interchange\ACAD\PS&E\Plans\R014-R021-1098105-Profiles Ramp B,D,F,E & H,G.dwg, R017, 9/17/2021 3:09:57 PM

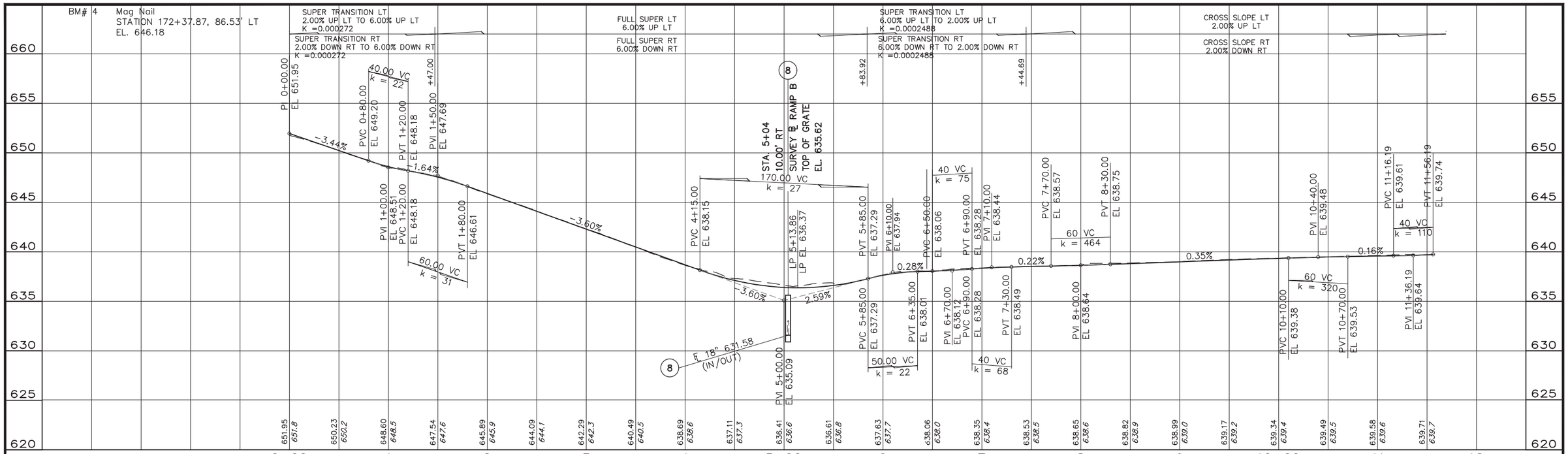

RAMP B

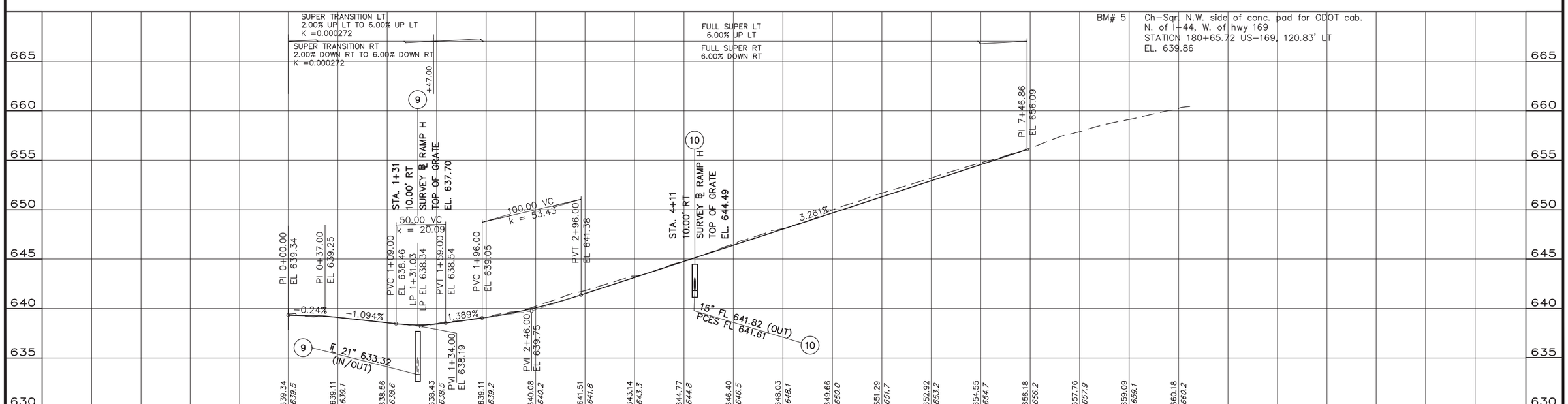

RAMP H

REGISTERED PROFESSIONAL ENGINEER ROBIN D. SEWELL 16173 OKLAHOMA 9/17/21

Design	CKS	
Drawn	CKD	
Checked	CKE	
Approved		
Squad	C & K	

INTERCHANGE (OPERATIONAL IMPROVEMENTS) TULSA COUNTY

PROFILE RAMP B & H

JOB PIECE NO. 10981(05) SHEET NO. R018

S:\Projects\ODOT\2015 EC-1710 I-44-169 Interchange\ACAD\PS&E\Plans\R014-R021-1098105-Profiles Ramp B,D,F,E & H,G.dwg, R018, 9/17/2021 3:10:02 PM

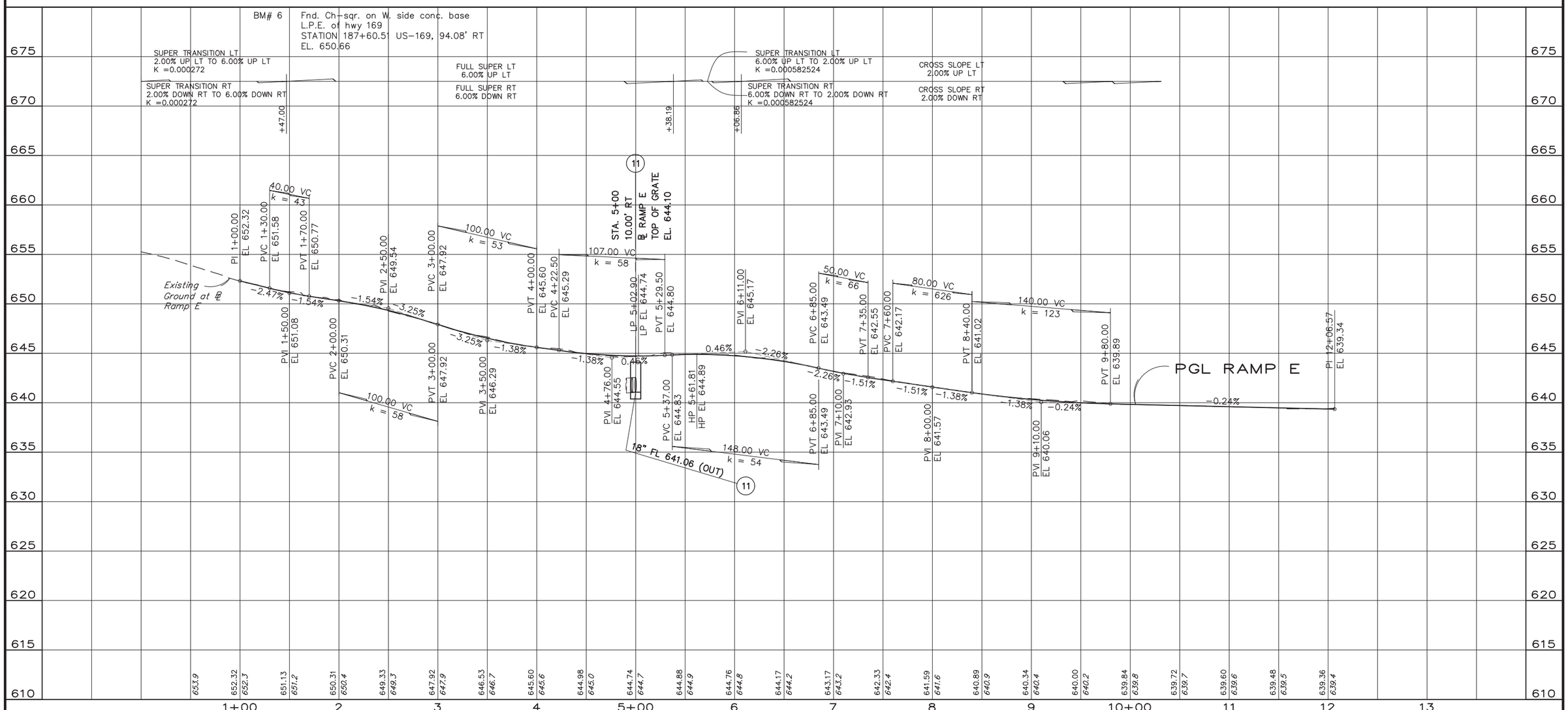

REGISTERED PROFESSIONAL ENGINEER
ROBERT D. SEWELL
16173
OKLAHOMA
9/17/21

Design	CKS	
Drawn	CKD	
Checked	CKE	
Approved		
Squad	C & K	

INTERCHANGE (OPERATIONAL IMPROVEMENTS) TULSA COUNTY

PROFILE RAMP E

JOB PIECE NO. 10981(05) SHEET NO. R019

S:\Projects\ODOT\2015 EC-1710 I-44-169 Interchange\ACAD\PS&E\Plans\R014-R021-1098105-Profiles Ramp B,D,F,E & H,G.dwg, R019, 9/17/2021 3:10:07 PM

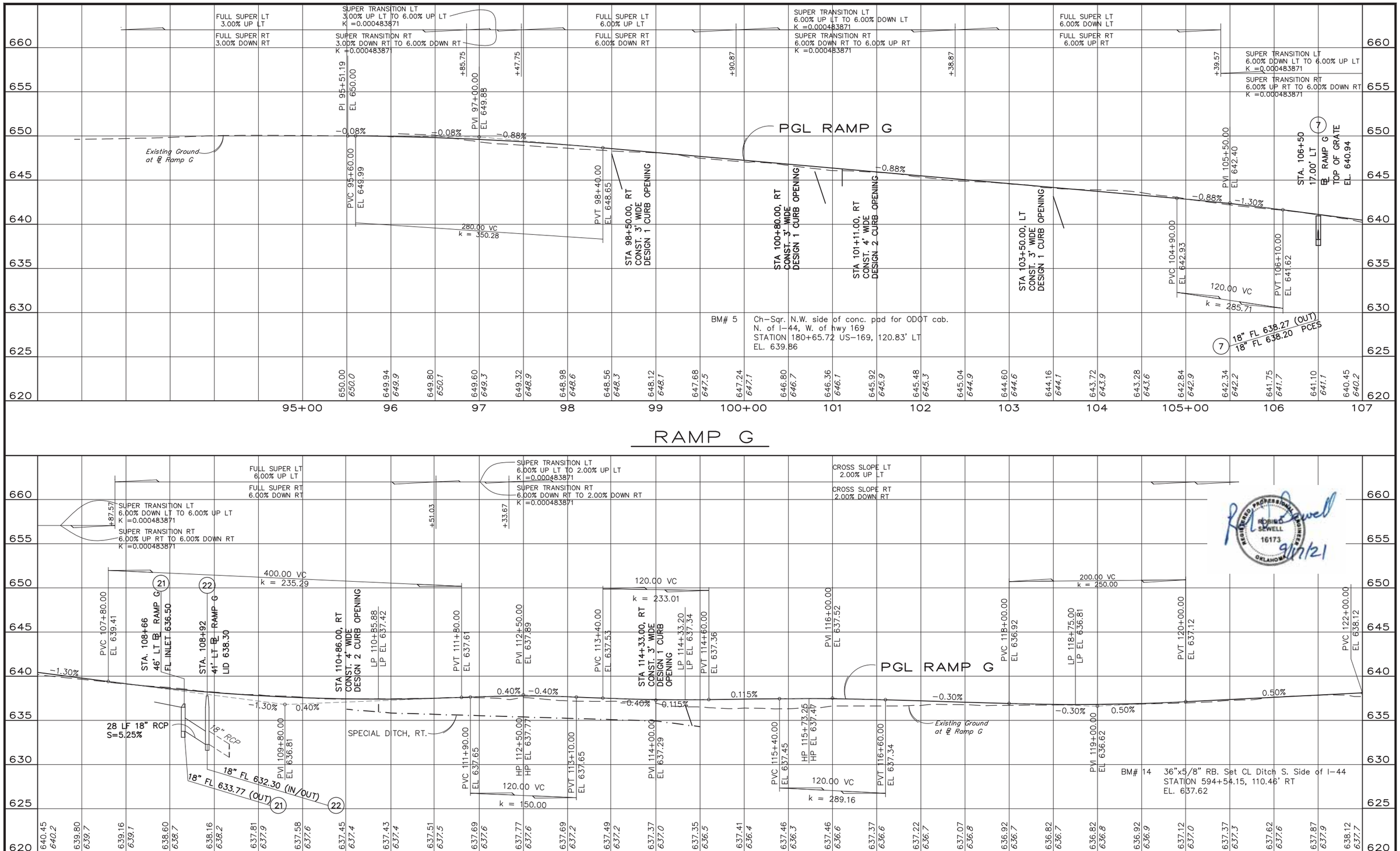

Design	CKS	
Drawn	CKD	
Checked	CKE	
Approved		
Squad	C & K	

INTERCHANGE (OPERATIONAL IMPROVEMENTS) TULSA COUNTY

PROFILE RAMP G

JOB PIECE NO. 10981(05) SHEET NO. R020

S:\Projects\ODOT\2015 EC-1710 I-44-169 Interchange\ACAD\PS&E\Plans\R014-R021-10981(05)-Profiles Ramp B,D,F,E & H,G.dwg, R020, 9/17/2021 3:10:12 PM

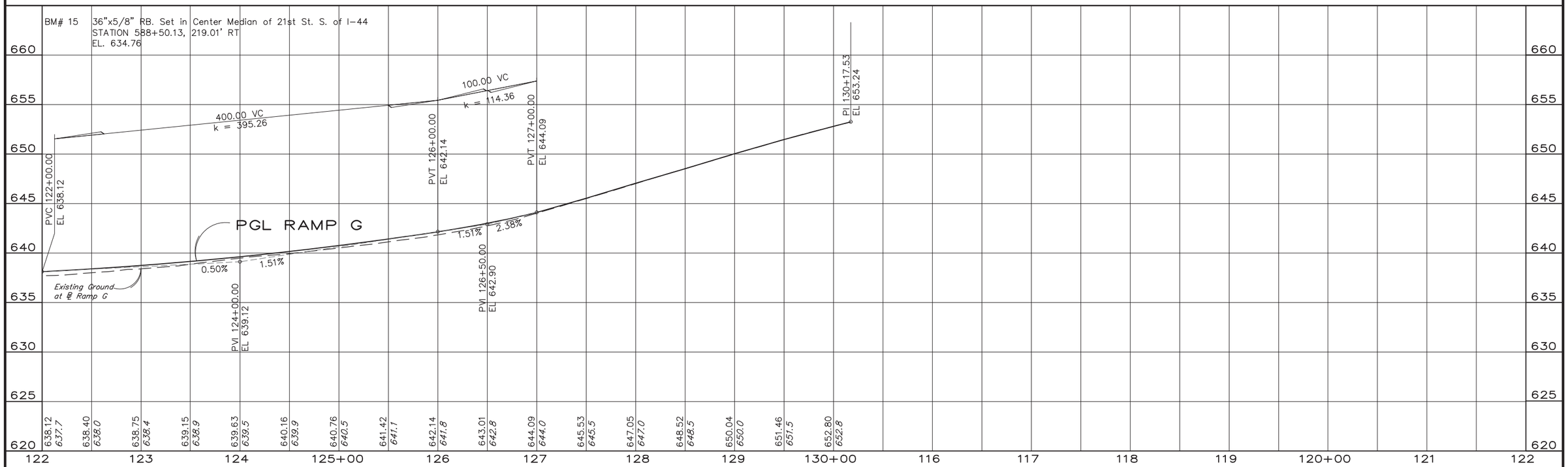

RAMP G

0 50 100 150

REGISTERED PROFESSIONAL ENGINEER ROBIN D. SEWELL 16173 OKLAHOMA

9/17/21

Design	CKS	
Drawn	CKD	
Checked	CKE	
Approved		
Squad	C & K	

INTERCHANGE (OPERATIONAL IMPROVEMENTS) TULSA COUNTY

PROFILE RAMP G

JOB PIECE NO. 10981(05) SHEET NO. R021

S:\Projects\ODOT\2015 EC-1710 I-44-169 Interchange\ACAD\PS&E\Plans\R014-R021-1098105-Profiles Ramp B,D,F,E & H,G.dwg, R021, 9/17/2021 3:10:17 PM

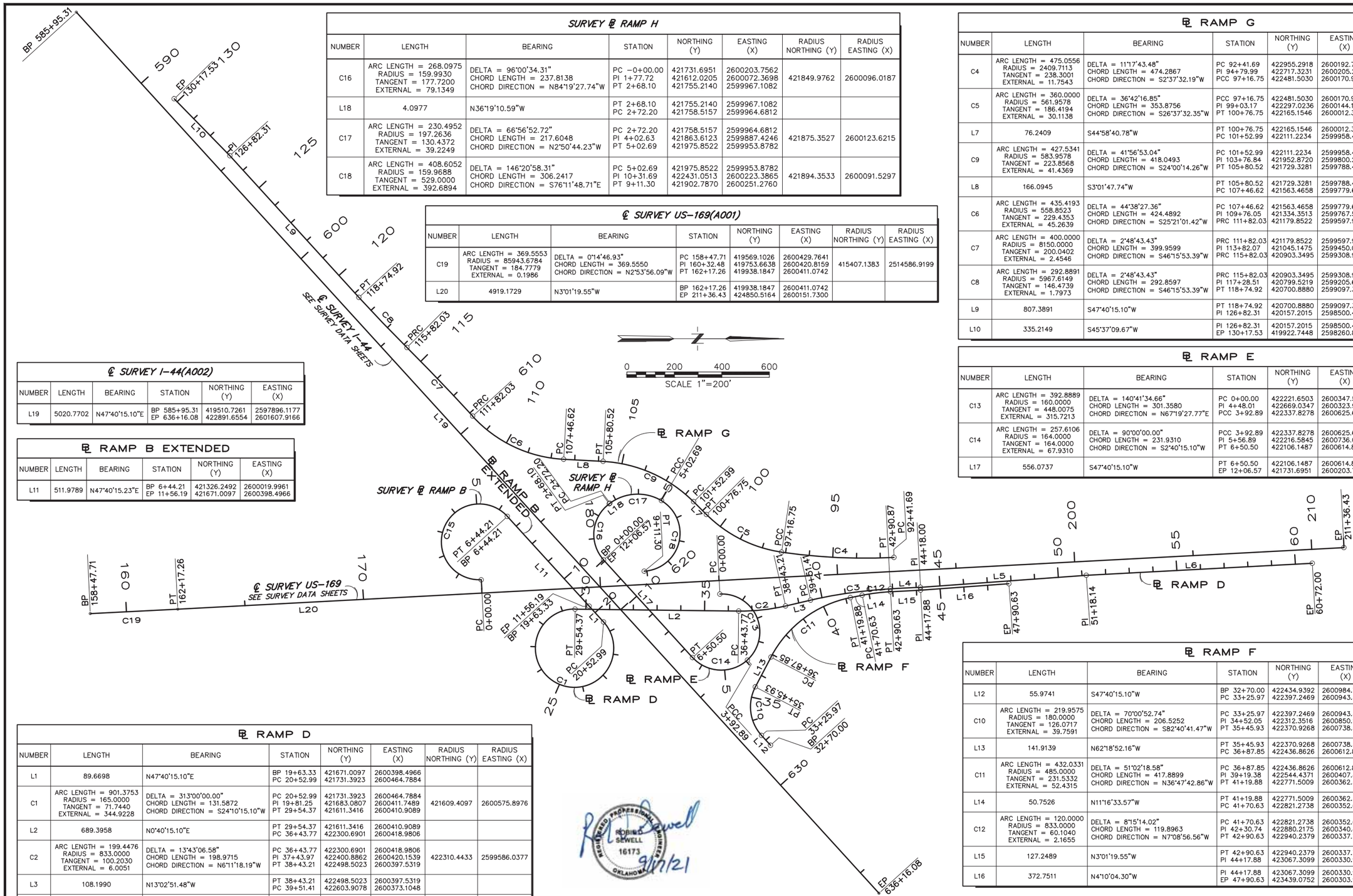

SURVEY ℄ RAMP H

NUMBER	LENGTH	BEARING	STATION	NORTHING (Y)	EASTING (X)	RADIUS NORTHING (Y)	RADIUS EASTING (X)
C16	ARC LENGTH = 268.0975 RADIUS = 159.9930 TANGENT = 177.7200 EXTERNAL = 79.1349	DELTA = 96°00'34.31" CHORD LENGTH = 237.8138 CHORD DIRECTION = N84°19'27.74"W	PC -0+00.00 PI 1+77.72 PT 2+68.10	421731.6951 421612.0205 421755.2140	2600203.7562 2600072.3698 2599967.1082	421849.9762	2600096.0187
L18	4.0977	N36°19'10.59"W	PT 2+68.10 PC 2+72.20	421755.2140 421758.5157	2599967.1082 2599964.6812		
C17	ARC LENGTH = 230.4952 RADIUS = 197.2636 TANGENT = 130.4372 EXTERNAL = 39.2249	DELTA = 66°56'52.72" CHORD LENGTH = 217.6048 CHORD DIRECTION = N2°50'44.23"W	PC 2+72.20 PI 4+02.63 PT 5+02.69	421758.5157 421863.6123 421975.8522	2599964.6812 2599887.4246 2599953.8782	421875.3527	2600123.6215
C18	ARC LENGTH = 408.6052 RADIUS = 159.9688 TANGENT = 529.0000 EXTERNAL = 392.6894	DELTA = 146°20'58.31" CHORD LENGTH = 306.2417 CHORD DIRECTION = S76°11'48.71"E	PC 5+02.69 PI 10+31.69 PT 9+11.30	421975.8522 422431.0513 421902.7870	2599953.8782 2600223.3865 2600251.2760	421894.3533	2600091.5297

℄ SURVEY US-169(A001)

NUMBER	LENGTH	BEARING	STATION	NORTHING (Y)	EASTING (X)	RADIUS NORTHING (Y)	RADIUS EASTING (X)
C19	ARC LENGTH = 369.5553 RADIUS = 85943.6784 TANGENT = 184.7779 EXTERNAL = 0.1986	DELTA = 0°14'46.93" CHORD LENGTH = 369.5550 CHORD DIRECTION = N2°53'56.09"W	PC 158+47.71 PI 160+32.48 PT 162+17.26	419569.1026 419753.6638 419938.1847	2600429.7641 2600420.8159 2600411.0742	415407.1383	2514586.9199
L20	4919.1729	N3°01'19.55"W	BP 162+17.26 EP 211+36.43	419938.1847 424850.5164	2600411.0742 2600151.7300		

℄ SURVEY I-44(A002)

NUMBER	LENGTH	BEARING	STATION	NORTHING (Y)	EASTING (X)
L19	5020.7702	N47°40'15.10"E	BP 585+95.31 EP 636+16.08	419510.7261 422891.6554	2597896.1177 2601607.9166

℄ RAMP B EXTENDED

NUMBER	LENGTH	BEARING	STATION	NORTHING (Y)	EASTING (X)
L11	511.9789	N47°40'15.23"E	BP 6+44.21 EP 11+56.19	421326.2492 421671.0097	2600019.9961 2600398.4966

℄ RAMP G

NUMBER	LENGTH	BEARING	STATION	NORTHING (Y)	EASTING (X)	RADIUS NORTHING (Y)	RADIUS EASTING (X)
C4	ARC LENGTH = 475.0556 RADIUS = 2409.7113 TANGENT = 238.3001 EXTERNAL = 11.7543	DELTA = 11°17'43.48" CHORD LENGTH = 474.2867 CHORD DIRECTION = S2°37'32.19"W	PC 92+41.69 PI 94+79.99 PCC 97+16.75	422955.2918 422717.3231 422481.5030	2600192.7053 2600205.2688 2600170.9785	422828.2491	2597786.3453
C5	ARC LENGTH = 360.0000 RADIUS = 561.9578 TANGENT = 186.4194 EXTERNAL = 30.1138	DELTA = 36°42'16.85" CHORD LENGTH = 353.8756 CHORD DIRECTION = S26°37'32.35"W	PCC 97+16.75 PI 99+03.17 PT 100+76.75	422481.5030 422297.0236 422165.1546	2600170.9785 2600144.1536 2600012.3858	422562.3661	2599614.8690
L7	76.2409	S44°58'40.78"W	PT 100+76.75 PC 101+52.99	422165.1546 422111.2234	2600012.3858 2599958.4960		
C9	ARC LENGTH = 427.5341 RADIUS = 583.9578 TANGENT = 223.8568 EXTERNAL = 41.4369	DELTA = 41°56'53.04" CHORD LENGTH = 418.0493 CHORD DIRECTION = S24°00'14.26"W	PC 101+52.99 PI 103+76.84 PT 105+80.52	422111.2234 421952.8720 421729.3281	2599958.4960 2599800.2662 2599788.4337	421698.4615	2600371.5751
L8	166.0945	S3°01'47.74"W	PT 105+80.52 PC 107+46.62	421729.3281 421563.4658	2599788.4337 2599779.6543		
C6	ARC LENGTH = 435.4193 RADIUS = 558.8523 TANGENT = 229.4353 EXTERNAL = 45.2639	DELTA = 44°38'27.36" CHORD LENGTH = 424.4892 CHORD DIRECTION = S25°21'01.42"W	PC 107+46.62 PI 109+76.05 PRC 111+82.03	421563.4658 421334.3513 421179.8522	2599779.6543 2599767.5269 2599597.9080	421593.0054	2599221.5833
C7	ARC LENGTH = 400.0000 RADIUS = 8150.0000 TANGENT = 200.0402 EXTERNAL = 2.4546	DELTA = 2°48'43.43" CHORD LENGTH = 399.9599 CHORD DIRECTION = S46°15'53.39"W	PRC 111+82.03 PI 113+82.07 PRC 115+82.03	421179.8522 421045.1475 420903.3495	2599597.9080 2599450.0206 2599308.9198	415154.6490	2605086.0248
C8	ARC LENGTH = 292.8891 RADIUS = 5967.6149 TANGENT = 146.4739 EXTERNAL = 1.7973	DELTA = 2°48'43.43" CHORD LENGTH = 292.8597 CHORD DIRECTION = S46°15'53.39"W	PRC 115+82.03 PI 117+28.51 PT 118+74.92	420903.3495 420799.5219 420700.8880	2599308.9198 2599205.6027 2599097.3162	425112.6785	2595078.7925
L9	807.3891	S47°40'15.10"W	PT 118+74.92 PI 126+82.31	420700.8880 420157.2015	2599097.3162 2598500.4225		
L10	335.2149	S45°37'09.67"W	PI 126+82.31 EP 130+17.53	420157.2015 419922.7448	2598500.4225 2598260.8414		

℄ RAMP E

NUMBER	LENGTH	BEARING	STATION	NORTHING (Y)	EASTING (X)	RADIUS NORTHING (Y)	RADIUS EASTING (X)
C13	ARC LENGTH = 392.8889 RADIUS = 160.0000 TANGENT = 448.0075 EXTERNAL = 315.7213	DELTA = 140°41'34.66" CHORD LENGTH = 301.3580 CHORD DIRECTION = N67°19'27.77"E	PC 0+00.00 PI 4+48.01 PCC 3+92.89	422221.6503 422669.0347 422337.8278	2600347.5991 2600323.9797 2600625.6628	422230.0856	2600507.3766
C14	ARC LENGTH = 257.6106 RADIUS = 164.0000 TANGENT = 164.0000 EXTERNAL = 67.9310	DELTA = 90°00'00.00" CHORD LENGTH = 231.9310 CHORD DIRECTION = S2°40'15.10"W	PCC 3+92.89 PI 5+56.89 PT 6+50.50	422337.8278 422216.5845 422106.1487	2600625.6628 2600736.0985 2600614.8552	422227.3921	2600504.4194
L17	556.0737	S47°40'15.10"W	PT 6+50.50 EP 12+06.57	422106.1487 421731.6951	2600614.8552 2600203.7562		

℄ RAMP F

NUMBER	LENGTH	BEARING	STATION	NORTHING (Y)	EASTING (X)	RADIUS NORTHING (Y)	RADIUS EASTING (X)
L12	55.9741	S47°40'15.10"W	BP 32+70.00 PC 33+25.97	422434.9392 422397.2469	2600984.7323 2600943.3513		
C10	ARC LENGTH = 219.9575 RADIUS = 180.0000 TANGENT = 126.0717 EXTERNAL = 39.7591	DELTA = 70°00'52.74" CHORD LENGTH = 206.5252 CHORD DIRECTION = S82°40'41.47"W	PC 33+25.97 PI 34+52.05 PT 35+45.93	422397.2469 422312.3516 422370.9268	2600943.3513 2600850.1480 2600738.5101	422530.3188	2600822.1414
L13	141.9139	N62°18'52.16"W	PT 35+45.93 PC 36+87.85	422370.9268 422436.8626	2600738.5101 2600612.8438		
C11	ARC LENGTH = 432.0331 RADIUS = 485.0000 TANGENT = 231.5332 EXTERNAL = 52.4315	DELTA = 51°02'18.58" CHORD LENGTH = 417.8899 CHORD DIRECTION = N36°47'42.86"W	PC 36+87.85 PI 39+19.38 PT 41+19.88	422436.8626 422544.4371 422771.5009	2600612.8438 2600407.8186 2600362.5457	422866.3355	2600838.1836
L14	50.7526	N11°16'33.57"W	PT 41+19.88 PC 41+70.63	422771.5009 422821.2738	2600362.5457 2600352.6218		
C12	ARC LENGTH = 120.0000 RADIUS = 833.0000 TANGENT = 60.1040 EXTERNAL = 2.1655	DELTA = 8°15'14.02" CHORD LENGTH = 119.8963 CHORD DIRECTION = N7°08'56.56"W	PC 41+70.63 PI 42+30.74 PT 42+90.63	422821.2738 422880.2175 422940.2379	2600352.6218 2600340.8694 2600337.7006	422984.1546	2601169.5421
L15	127.2489	N3°01'19.55"W	PT 42+90.63 PI 44+17.88	422940.2379 423067.3099	2600337.7006 2600330.9919		
L16	372.7511	N4°10'04.30"W	PI 44+17.88 EP 47+90.63	423067.3099 423439.0752	2600330.9919 2600303.9008		

℄ RAMP D

NUMBER	LENGTH	BEARING	STATION	NORTHING (Y)	EASTING (X)	RADIUS NORTHING (Y)	RADIUS EASTING (X)
L1	89.6698	N47°40'15.10"E	BP 19+63.33 PC 20+52.99	421671.0097 421731.3923	2600398.4966 2600464.7884		
C1	ARC LENGTH = 901.3753 RADIUS = 165.0000 TANGENT = 71.7440 EXTERNAL = 344.9228	DELTA = 313°00'00.00" CHORD LENGTH = 131.5872 CHORD DIRECTION = S24°10'15.10"W	PC 20+52.99 PI 19+81.25 PT 29+54.37	421731.3923 421683.0807 421611.3416	2600464.7884 2600411.7489 2600410.9089	421609.4097	2600575.8976
L2	689.3958	N0°40'15.10"E	PT 29+54.37 PC 36+43.77	421611.3416 422300.6901	2600410.9089 2600418.9806		
C2	ARC LENGTH = 199.4476 RADIUS = 833.0000 TANGENT = 100.2030 EXTERNAL = 6.0051	DELTA = 13°43'06.58" CHORD LENGTH = 198.9715 CHORD DIRECTION = N6°11'18.19"W	PC 36+43.77 PI 37+43.97 PT 38+43.21	422300.6901 422400.8862 422498.5023	2600418.9806 2600420.1539 2600397.5319	422310.4433	2599586.0377
L3	108.1990	N13°02'51.48"W	PT 38+43.21 PC 39+51.41	422498.5023 422603.9078	2600397.5319 2600373.1048		
C3	ARC LENGTH = 339.4585 RADIUS = 1940.0000 TANGENT = 170.1636 EXTERNAL = 7.4485	DELTA = 10°01'31.93" CHORD LENGTH = 339.0256 CHORD DIRECTION = N8°02'05.52"W	PC 39+51.41 PI 41+21.58 PT 42+90.87	422603.9078 422769.6783 422939.6053	2600373.1048 2600334.6885 2600325.7173	423041.8842	2602263.0193
L4	127.1290	N3°01'19.55"W	PT 42+90.87 PI 44+18.00	422939.6053 423066.5574	2600325.7173 2600319.0149		
L5	700.1400	N4°10'04.30"W	PI 44+18.00 PI 51+18.14	423066.5574 423764.8458	2600319.0149 2600268.1296		
L6	953.8626	N3°01'19.55"W	PI 51+18.14 EP 60+72.00	423764.8458 424717.3818	2600268.1296 2600217.8409		

SURVEY ℄ RAMP B

NUMBER	LENGTH	BEARING	STATION	NORTHING (Y)	EASTING (X)	RADIUS NORTHING (Y)	RADIUS EASTING (X)
C15	ARC LENGTH = 644.2116 RADIUS = 159.9988 TANGENT = 337.7707 EXTERNAL = 533.7483	DELTA = 230°41'34.66" CHORD LENGTH = 289.1933 CHORD DIRECTION = N67°40'32.23"W	PC 0+00.00 PI -3+37.77 PT 6+44.21	421216.3992 421553.7001 421326.2492	2600287.5138 2600269.7062 2600019.9961	421207.9639	2600127.7375

Survey	CKS	
Drawn	CKD	
Checked	CKE	
Approved		
Squad	C & K	

INTERCHANGE (OPERATIONAL IMPROVEMENTS) TULSA COUNTY

GEOMETRICS

JOB PIECE NO. 10981(05) SHEET NO. R022

S:\Projects\ODOT\2015 EC-1710 I-44-169 Interchange\ACAD\PS&E\Plans\R022-1098105-Geometrics.dwg, 11x17, 9/17/2021 3:10:28 PM

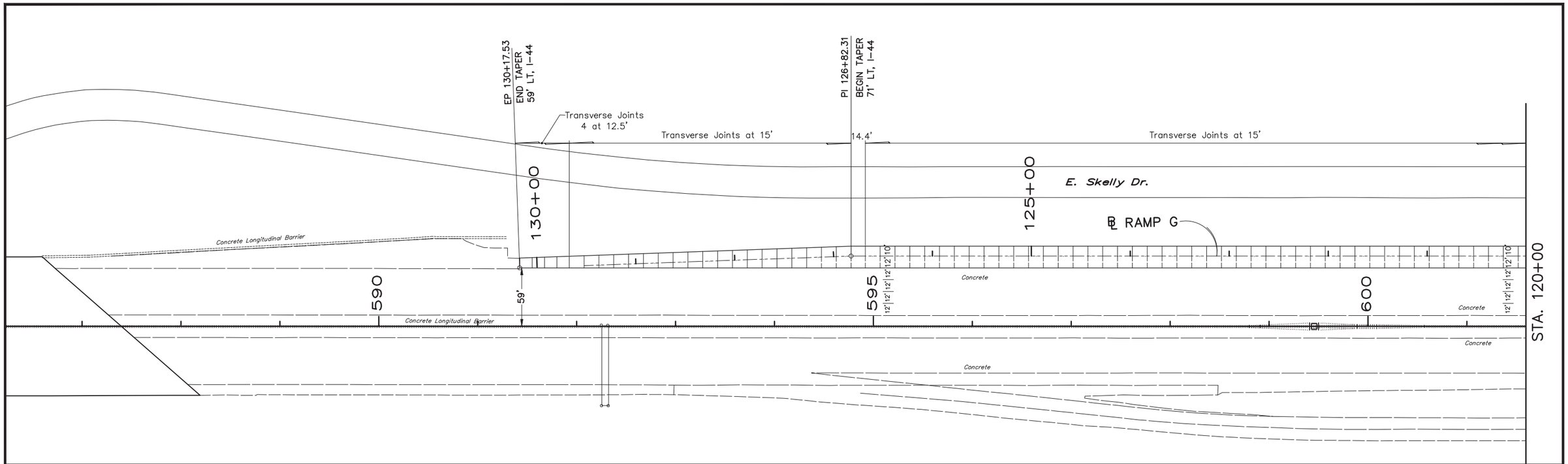

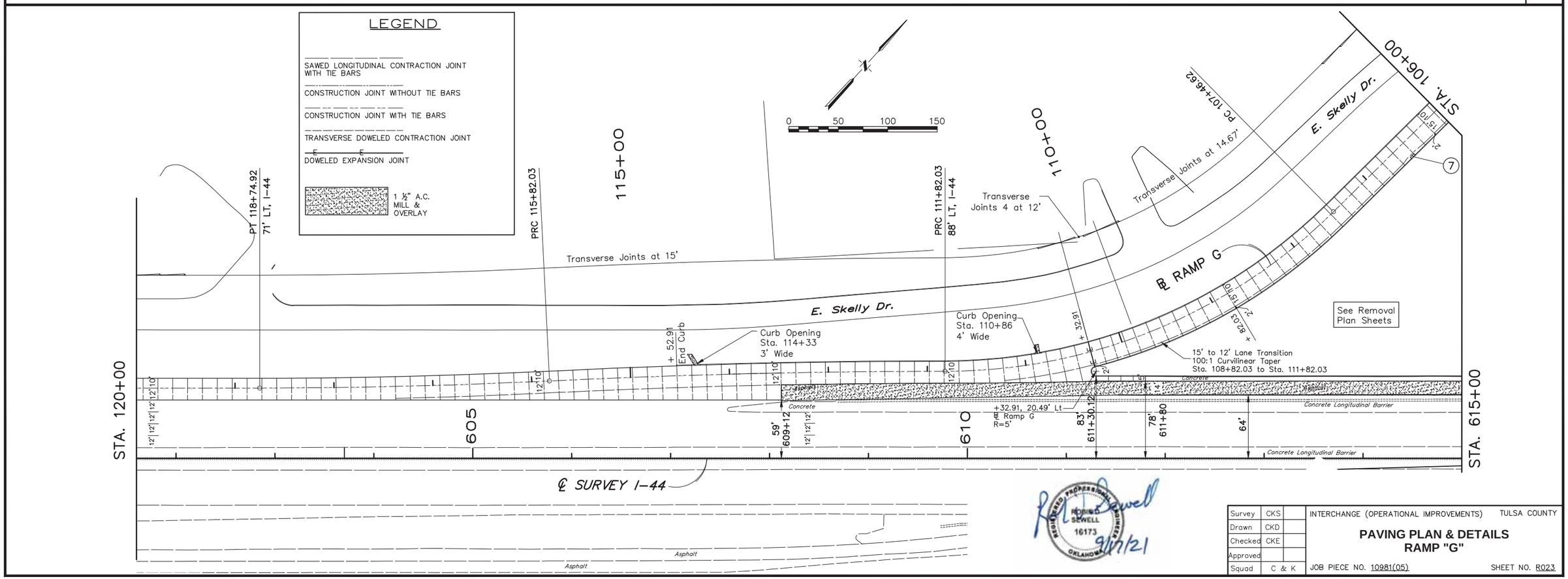

REGISTERED PROFESSIONAL ENGINEER
ROBERT D. SEWELL
16173
OKLAHOMA
9/17/21

Survey	CKS	
Drawn	CKD	
Checked	CKE	
Approved		
Squad	C & K	

INTERCHANGE (OPERATIONAL IMPROVEMENTS) TULSA COUNTY

PAVING PLAN & DETAILS
RAMP "G"

JOB PIECE NO. 10981(05) SHEET NO. R023

S:\Projects\ODOT\2015 EC-1710 I-44-169 Interchange\ACAD\PS&E\Plans\R023-R026-1098105-Paving Plans & Details.dwg, R023, 9/17/2021 3:10:33 PM

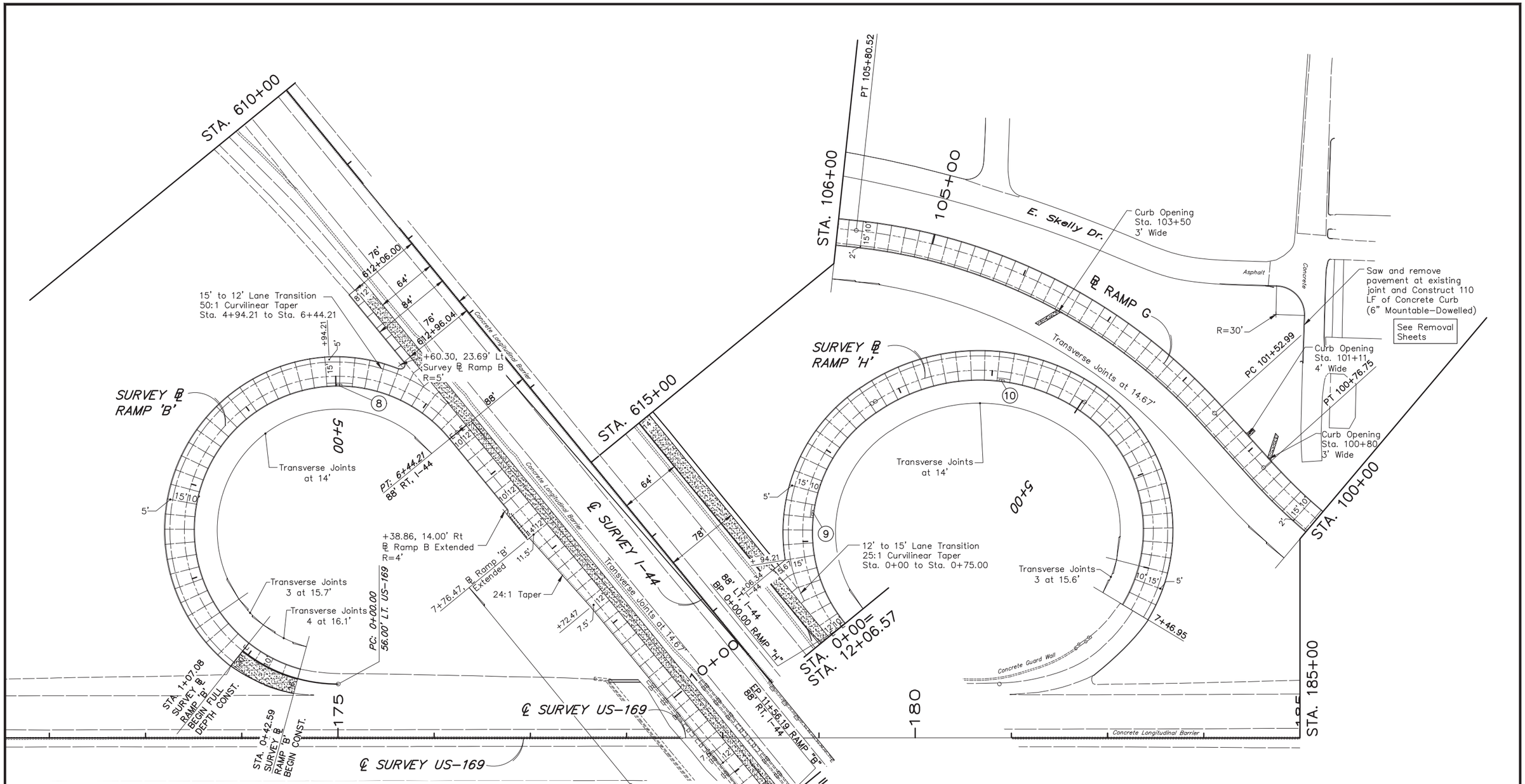

LEGEND

SAWED LONGITUDINAL CONTRACTION JOINT WITH TIE BARS

CONSTRUCTION JOINT WITHOUT TIE BARS

CONSTRUCTION JOINT WITH TIE BARS

TRANSVERSE DOWELED CONTRACTION JOINT

E E
DOWELED EXPANSION JOINT

1 ½" A.C. MILL & OVERLAY

RONALD SEWELL 16173 OKLAHOMA REGISTERED PROFESSIONAL ENGINEER
9/17/21

Survey	CKS	
Drawn	CKD	
Checked	CKE	
Approved		
Squad	C & K	

INTERCHANGE (OPERATIONAL IMPROVEMENTS) TULSA COUNTY

PAVING PLAN & DETAILS
RAMP "B", "G", & "H"

JOB PIECE NO. 10981(05) SHEET NO. R024

S:\Projects\ODOT\2015 EC-1710 I-44-169 Interchange\ACAD\PS&E\Plans\R023-R026-109B105-Paving Plans & Details.dwg, R024, 9/17/2021 3:10:47 PM

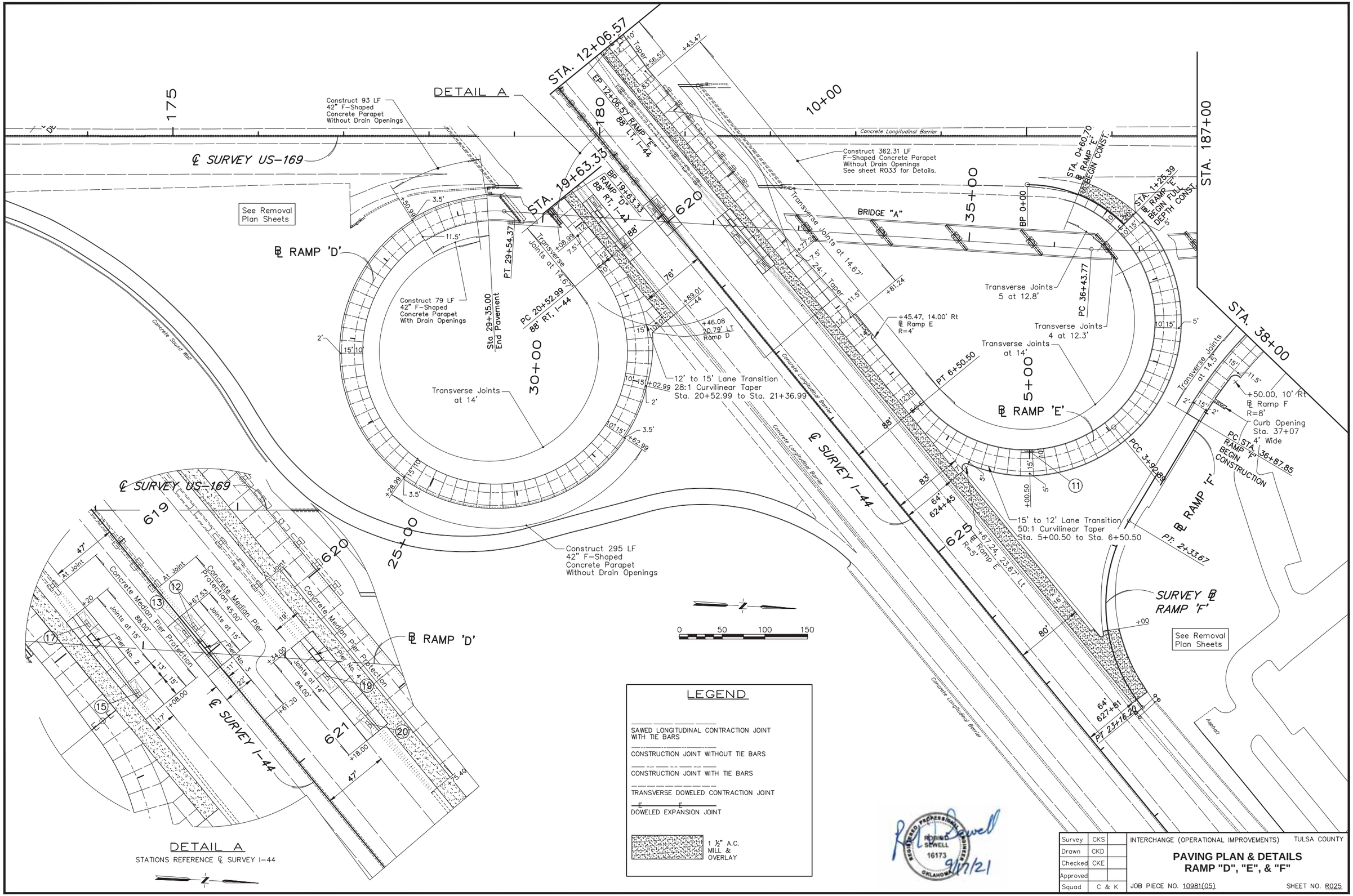

DETAIL A
STATIONS REFERENCE ℄ SURVEY I-44

Survey	CKS	
Drawn	CKD	
Checked	CKE	
Approved		
Squad	C & K	

INTERCHANGE (OPERATIONAL IMPROVEMENTS) TULSA COUNTY

PAVING PLAN & DETAILS
RAMP "D", "E", & "F"

JOB PIECE NO. 10981(05) SHEET NO. R025

S:\Projects\ODOT\2015 EC-1710 I-44-169 Interchange\ACAD\PS&E\Plans\R023-R026-1098105-Paving Plans & Details.dwg, R025, 9/17/2021 3:10:37 PM

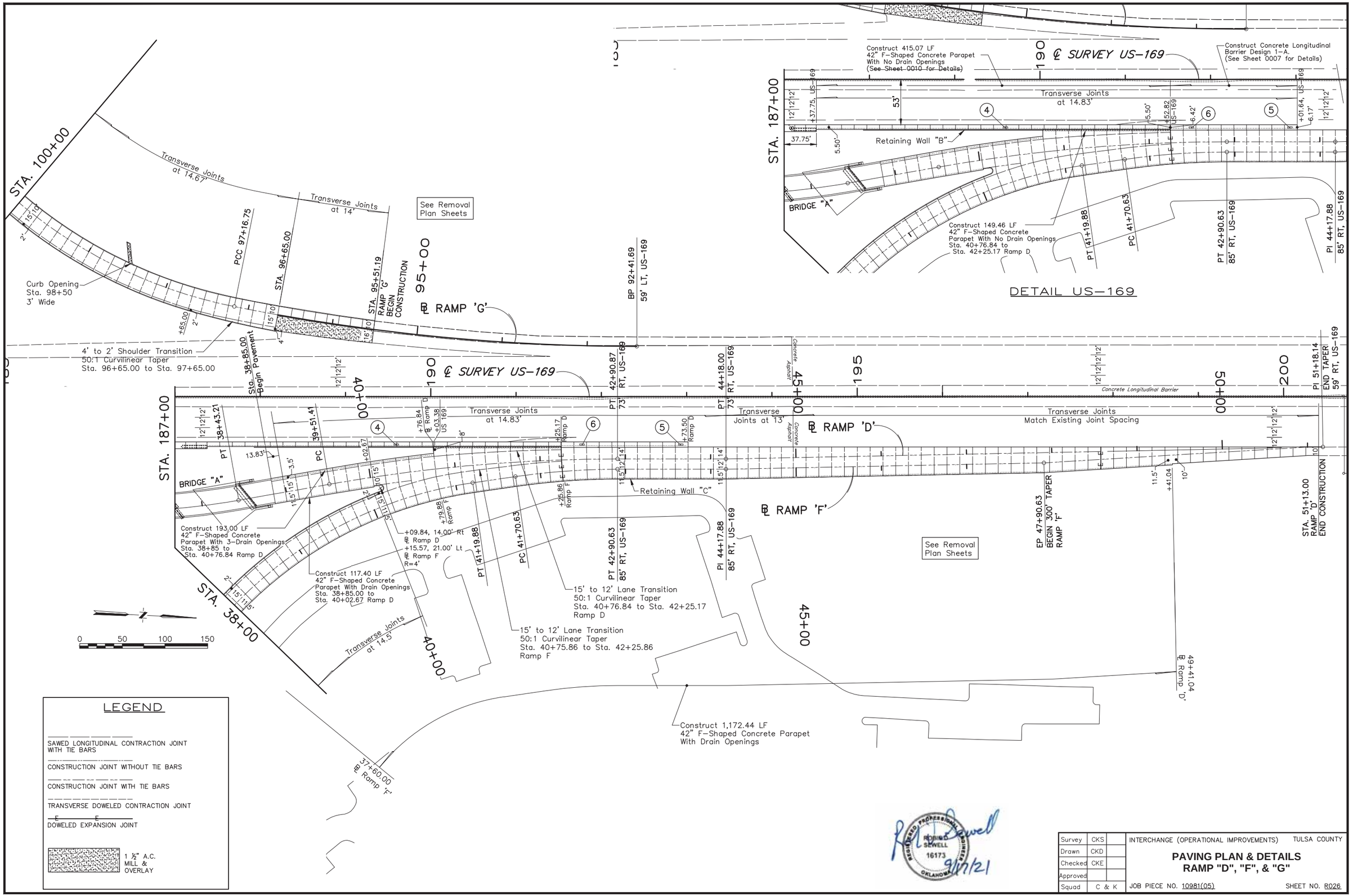

LEGEND

SAWED LONGITUDINAL CONTRACTION JOINT WITH TIE BARS

CONSTRUCTION JOINT WITHOUT TIE BARS

CONSTRUCTION JOINT WITH TIE BARS

TRANSVERSE DOWELED CONTRACTION JOINT

DOWELED EXPANSION JOINT

1 ½" A.C. MILL & OVERLAY

REGISTERED PROFESSIONAL ENGINEER ROLAND SEWELL 16173 OKLAHOMA 9/17/21

Survey	CKS	
Drawn	CKD	
Checked	CKE	
Approved		
Squad	C & K	

INTERCHANGE (OPERATIONAL IMPROVEMENTS) TULSA COUNTY

PAVING PLAN & DETAILS
RAMP "D", "F", & "G"

JOB PIECE NO. 10981(05) SHEET NO. R026

S:\Projects\ODOT\2015 EC-1710 I-44-169 Interchange\ACAD\PS&E\Plans\R023-R026-1098105-Paving Plans & Details.dwg, R026, 9/17/2021 3:10:42 PM

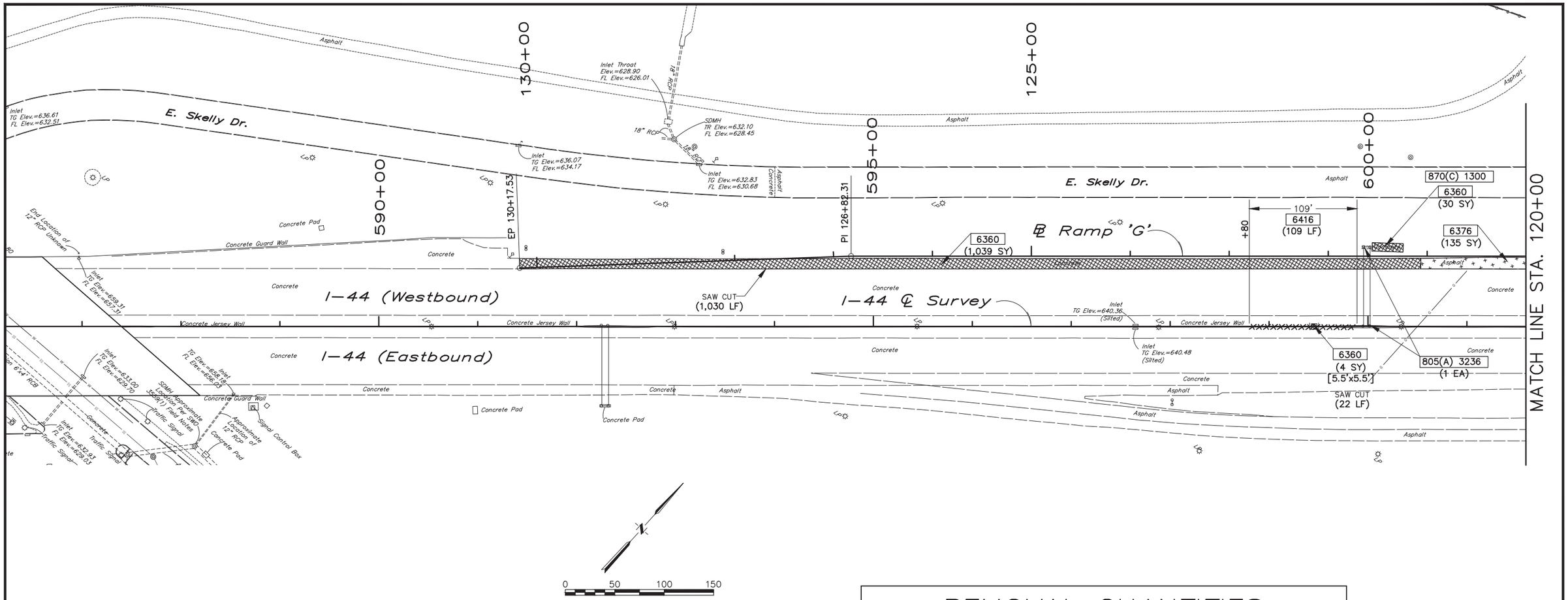

PAY ITEMS

6356	REMOVAL OF CURB AND GUTTER ②
6360	REMOVAL OF CONCRETE PAVEMENT ①
6364	REMOVAL OF ASPHALT PAVEMENT
6368	REMOVAL OF DRAINAGE INLETS
6376	REMOVAL OF CONCRETE PAVEMENT W/ASPHALT OVERLAY ①
6396	REMOVAL OF GUARDRAIL
6416	REMOVAL OF CONCRETE MEDIAN BARRIER ③
6436	REMOVAL OF CONCRETE DITCH LINER
6440	REMOVAL OF EXISTING PIPE
805(A) 3236	(PL)REMOVAL OF OVERHEAD SIGN STRUCTURE
870(C) 1300	SAND FILLED IMPACT ATTENUATION MODULE REMOVAL

LEGEND

- //// REMOVE OR LEAVE PIPE INPLACE AND REMOVE PORTION OF STRUCTURE 3'-0" BELOW FINISH GRADE AND PUMP FULL OF CONTROLLED LOW STRENGTH MATERIAL (CLSM). CONTRACTORS OPTION.
- ASPHALT PAVEMENT REMOVALS
- CONCRETE PAVEMENT REMOVALS
- CONCRETE PAVEMENT W/ ASPHALT OVERLAY REMOVALS

REMOVAL QUANTITIES

	ITEM	DESCRIPTION	UNIT	QUANTITY THIS SHEET
	619(B)6356	REMOVAL OF CURB AND GUTTER	LF	.
	619(B)6360	REMOVAL OF CONCRETE PAVEMENT	SY	1,073
	619(B)6364	REMOVAL OF ASPHALT PAVEMENT	SY	.
	619(B)6368	REMOVAL OF DRAINAGE INLETS	EA	.
	619(B)6376	REMOVAL OF CONCRETE PAVEMENT W/ASPHALT OVERLAY	SY	135
	619(B)6396	REMOVAL OF GUARDRAIL	LF	.
	619(B)6416	REMOVAL OF CONCRETE MEDIAN BARRIER	LF	109
	619(B)6436	REMOVAL OF CONCRETE DITCH LINER	LF	.
	619(B)6440	REMOVAL OF EXISTING PIPE	LF	.
	619(C)6600	SAWING PAVEMENT	LF	1,052
④	805(A)3236	(PL)REMOVAL OF OVERHEAD SIGN STRUCTURE	EA	1
④	870(C)1300	SAND FILLED IMPACT ATTENUATION MODULE REMOVAL	LSUM	1

PAY NOTES

① INCLUDES REMOVAL OF INTEGRAL CURB.

② INCLUDES STAND UP CURB.

③ THE UNIT PRICE BID FOR REMOVAL OF CONCRETE MEDIAN BARRIER SHALL INCLUDE BUT NOT LIMITED TO: SAWING, THE REMOVAL OF STANDARD DESIGN SECTIONS, TRANSITION SECTIONS(BOTH SOLID AND SEPARATED SECTIONS), 4" CONCRETE DIVIDING STRIP, AND SAND BACKFILL WITHIN THE REMOVAL LIMITS SHOWN OR AS DIRECTED BY THE ENGINEER.

④ TRAFFIC ITEM.

REGISTERED PROFESSIONAL ENGINEER
RONALD L. SEWELL
16173
OKLAHOMA
9/17/21

Survey	CKS	
Drawn	CKD	
Checked	CKE	
Approved		
Squad	C & K	

INTERCHANGE (OPERATIONAL IMPROVEMENTS) TULSA COUNTY

REMOVAL PLAN
RAMP "G"

JOB PIECE NO. 10981(05) SHEET NO. R027

S:\Projects\ODOT\2015 EC-1710 I-44-169 Interchange\ACAD\PS&E\Plans\R027-R031-109810S-Removal Plans.dwg, R027, 9/17/2021 3:10:53 PM

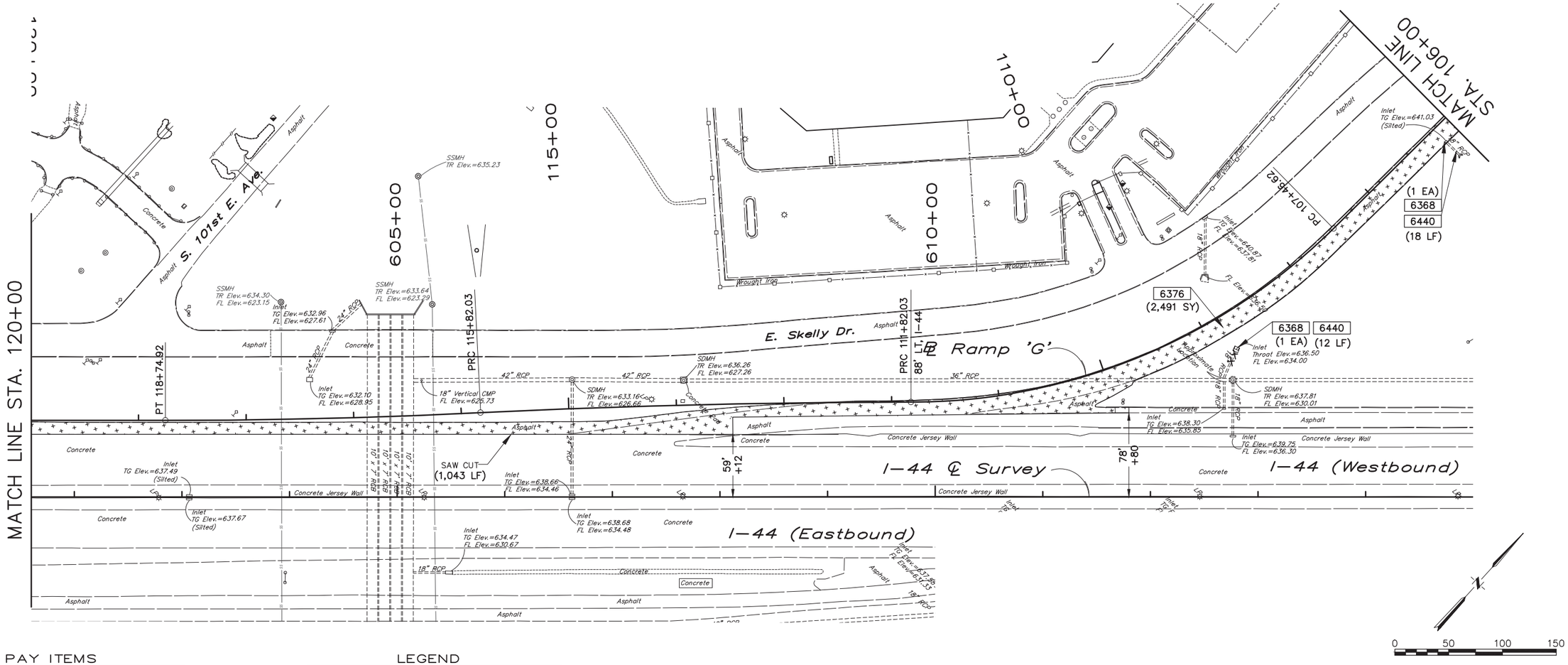

PAY ITEMS

6356	REMOVAL OF CURB AND GUTTER ②
6360	REMOVAL OF CONCRETE PAVEMENT ①
6364	REMOVAL OF ASPHALT PAVEMENT
6368	REMOVAL OF DRAINAGE INLETS
6376	REMOVAL OF CONCRETE PAVEMENT W/ASPHALT OVERLAY ①
6396	REMOVAL OF GUARDRAIL
6416	REMOVAL OF CONCRETE MEDIAN BARRIER ③
6436	REMOVAL OF CONCRETE DITCH LINER
6440	REMOVAL OF EXISTING PIPE
805(A) 3236	(PL)REMOVAL OF OVERHEAD SIGN STRUCTURE
870(C) 1300	SAND FILLED IMPACT ATTENUATION MODULE REMOVAL

LEGEND

- //// REMOVE OR LEAVE PIPE INPLACE AND REMOVE PORTION OF STRUCTURE 3'-0" BELOW FINISH GRADE AND PUMP FULL OF CONTROLLED LOW STRENGTH MATERIAL (CLSM). CONTRACTORS OPTION.
- ASPHALT PAVEMENT REMOVALS
- CONCRETE PAVEMENT REMOVALS
- CONCRETE PAVEMENT W/ ASPHALT OVERLAY REMOVALS

REMOVAL QUANTITIES

	ITEM	DESCRIPTION	UNIT	QUANTITY THIS SHEET
	619(B)6356	REMOVAL OF CURB AND GUTTER	LF	.
	619(B)6360	REMOVAL OF CONCRETE PAVEMENT	SY	.
	619(B)6364	REMOVAL OF ASPHALT PAVEMENT	SY	.
	619(B)6368	REMOVAL OF DRAINAGE INLETS	EA	2
	619(B)6376	REMOVAL OF CONCRETE PAVEMENT W/ASPHALT OVERLAY	SY	2,491
	619(B)6396	REMOVAL OF GUARDRAIL	LF	.
	619(B)6416	REMOVAL OF CONCRETE MEDIAN BARRIER	LF	.
	619(B)6436	REMOVAL OF CONCRETE DITCH LINER	LF	.
	619(B)6440	REMOVAL OF EXISTING PIPE	LF	30
	619(C)6600	SAWING PAVEMENT	LF	1,043
④	805(A)3236	(PL)REMOVAL OF OVERHEAD SIGN STRUCTURE	EA	.
④	870(C)1300	SAND FILLED IMPACT ATTENUATION MODULE REMOVAL	LSUM	.

PAY NOTES

① INCLUDES REMOVAL OF INTEGRAL CURB.

② INCLUDES STAND UP CURB.

③ THE UNIT PRICE BID FOR REMOVAL OF CONCRETE MEDIAN BARRIER SHALL INCLUDE BUT NOT LIMITED TO: SAWING, THE REMOVAL OF STANDARD DESIGN SECTIONS, TRANSITION SECTIONS(BOTH SOLID AND SEPARATED SECTIONS), 4" CONCRETE DIVIDING STRIP, AND SAND BACKFILL WITHIN THE REMOVAL LIMITS SHOWN OR AS DIRECTED BY THE ENGINEER.

④ TRAFFIC ITEM.

REGISTERED PROFESSIONAL ENGINEER ROBERT D. SEWELL 16173 OKLAHOMA 9/17/21

Survey	CKS	
Drawn	CKD	
Checked	CKE	
Approved		
Squad	C & K	

INTERCHANGE (OPERATIONAL IMPROVEMENTS) TULSA COUNTY

REMOVAL PLAN
RAMP "G"

JOB PIECE NO. 10981(05) SHEET NO. R028

S:\Projects\ODOT\2015 EC-1710 I-44-169 Interchange\ACAD\PS&E\Plans\R027-R031-1098105-Removal Plans.dwg, R028, 9/17/2021 3:11:07 PM

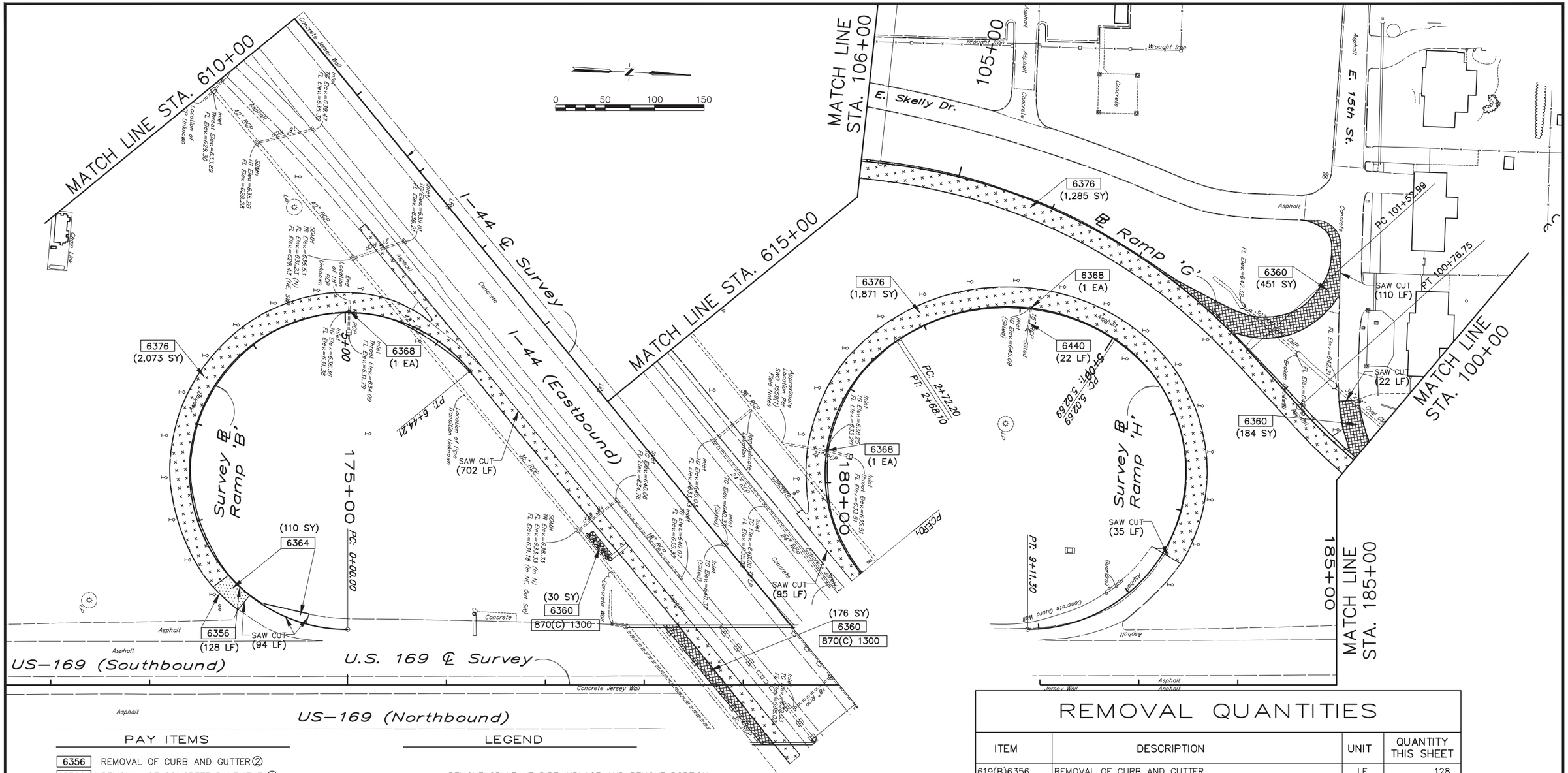

PAY ITEMS

6356	REMOVAL OF CURB AND GUTTER ②
6360	REMOVAL OF CONCRETE PAVEMENT ①
6364	REMOVAL OF ASPHALT PAVEMENT
6368	REMOVAL OF DRAINAGE INLETS
6376	REMOVAL OF CONCRETE PAVEMENT W/ASPHALT OVERLAY ①
6396	REMOVAL OF GUARDRAIL
6416	REMOVAL OF CONCRETE MEDIAN BARRIER ③
6436	REMOVAL OF CONCRETE DITCH LINER
6440	REMOVAL OF EXISTING PIPE
805(A) 3236	(PL)REMOVAL OF OVERHEAD SIGN STRUCTURE ④
870(C) 1300	SAND FILLED IMPACT ATTENUATION MODULE REMOVAL ④

LEGEND

- //// REMOVE OR LEAVE PIPE INPLACE AND REMOVE PORTION OF STRUCTURE 3'-0" BELOW FINISH GRADE AND PUMP FULL OF CONTROLLED LOW STRENGTH MATERIAL (CLSM). CONTRACTORS OPTION.
- ASPHALT PAVEMENT REMOVALS
- CONCRETE PAVEMENT REMOVALS
- CONCRETE PAVEMENT W/ ASPHALT OVERLAY REMOVALS

PAY NOTES

① INCLUDES REMOVAL OF INTEGRAL CURB.

② INCLUDES STAND UP CURB.

③ THE UNIT PRICE BID FOR REMOVAL OF CONCRETE MEDIAN BARRIER SHALL INCLUDE BUT NOT LIMITED TO: SAWING, THE REMOVAL OF STANDARD DESIGN SECTIONS, TRANSITION SECTIONS(BOTH SOLID AND SEPARATED SECTIONS), 4" CONCRETE DIVIDING STRIP, AND SAND BACKFILL WITHIN THE REMOVAL LIMITS SHOWN OR AS DIRECTED BY THE ENGINEER.

④ TRAFFIC ITEM.

REMOVAL QUANTITIES

	ITEM	DESCRIPTION	UNIT	QUANTITY THIS SHEET
	619(B)6356	REMOVAL OF CURB AND GUTTER	LF	128
	619(B)6360	REMOVAL OF CONCRETE PAVEMENT	SY	841
	619(B)6364	REMOVAL OF ASPHALT PAVEMENT	SY	110
	619(B)6368	REMOVAL OF DRAINAGE INLETS	EA	3
	619(B)6376	REMOVAL OF CONCRETE PAVEMENT W/ASPHALT OVERLAY	SY	5,229
	619(B)6396	REMOVAL OF GUARDRAIL	LF	.
	619(B)6416	REMOVAL OF CONCRETE MEDIAN BARRIER	LF	.
	619(B)6436	REMOVAL OF CONCRETE DITCH LINER	LF	.
	619(B)6440	REMOVAL OF EXISTING PIPE	LF	22
	619(C)6600	SAWING PAVEMENT	LF	1,058
④	805(A)3236	(PL)REMOVAL OF OVERHEAD SIGN STRUCTURE	EA	.
④	870(C)1300	SAND FILLED IMPACT ATTENUATION MODULE REMOVAL	LSUM	1

Survey	CKS	
Drawn	CKD	
Checked	CKE	
Approved		
Squad	C & K	

INTERCHANGE (OPERATIONAL IMPROVEMENTS) TULSA COUNTY

REMOVAL PLAN
RAMP "B", "G", & "H"

JOB PIECE NO. 10981(05) SHEET NO. R029

S:\Projects\ODOT\2015 EC-1710 I-44-169 Interchange\ACAD\PS&E\Plans\R027-R031-1098105-Removal Plans.dwg, R029, 9/17/2021 3:11:12 PM

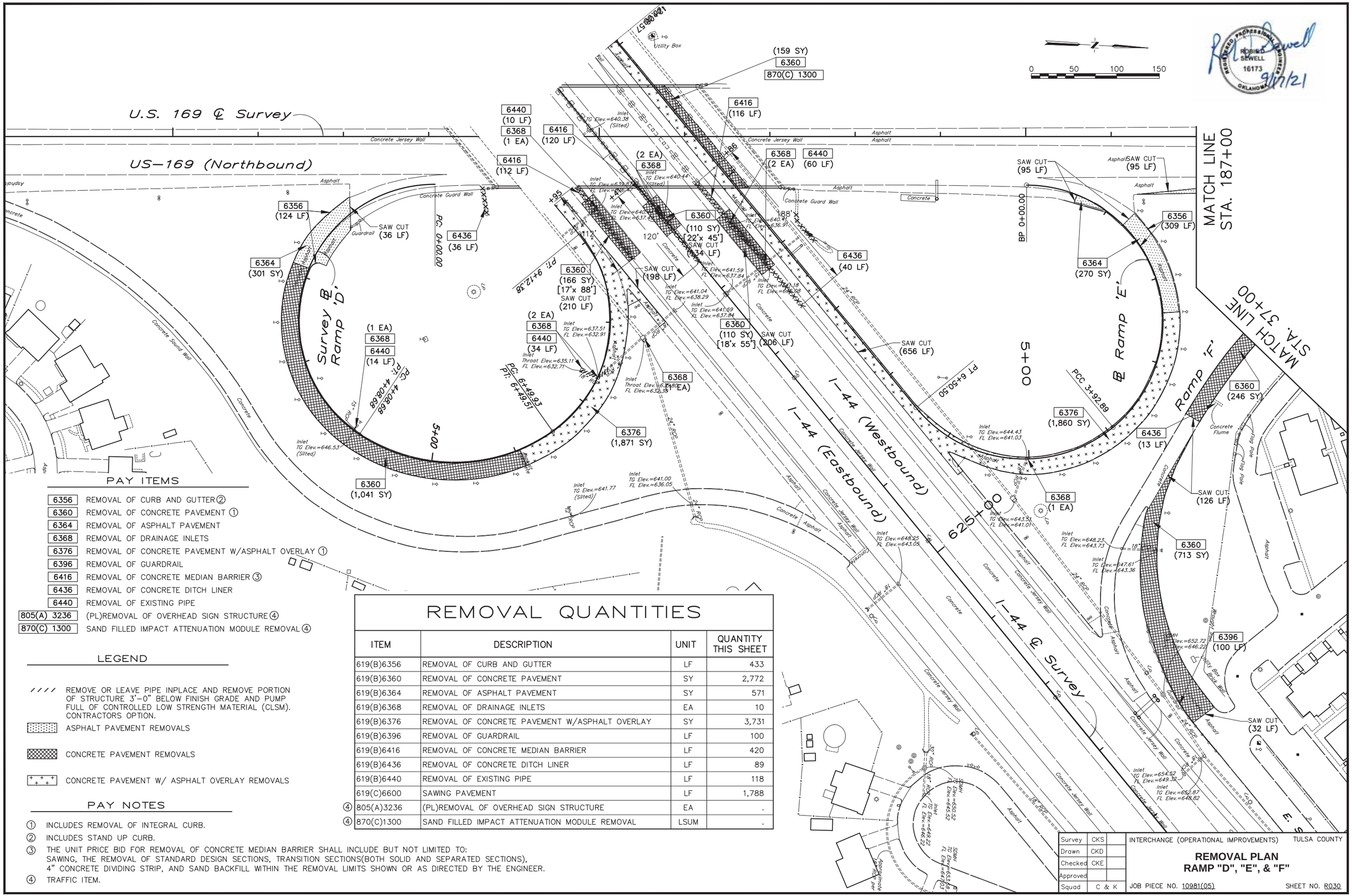

PAY ITEMS

6356	REMOVAL OF CURB AND GUTTER ②
6360	REMOVAL OF CONCRETE PAVEMENT ①
6364	REMOVAL OF ASPHALT PAVEMENT
6368	REMOVAL OF DRAINAGE INLETS
6376	REMOVAL OF CONCRETE PAVEMENT W/ASPHALT OVERLAY ①
6396	REMOVAL OF GUARDRAIL
6416	REMOVAL OF CONCRETE MEDIAN BARRIER ③
6436	REMOVAL OF CONCRETE DITCH LINER
6440	REMOVAL OF EXISTING PIPE
805(A) 3236	(PL)REMOVAL OF OVERHEAD SIGN STRUCTURE ④
870(C) 1300	SAND FILLED IMPACT ATTENUATION MODULE REMOVAL ④

LEGEND

- //// REMOVE OR LEAVE PIPE INPLACE AND REMOVE PORTION OF STRUCTURE 3'-0" BELOW FINISH GRADE AND PUMP FULL OF CONTROLLED LOW STRENGTH MATERIAL (CLSM). CONTRACTORS OPTION.
- ASPHALT PAVEMENT REMOVALS
- CONCRETE PAVEMENT REMOVALS
- CONCRETE PAVEMENT W/ ASPHALT OVERLAY REMOVALS

PAY NOTES

① INCLUDES REMOVAL OF INTEGRAL CURB.
② INCLUDES STAND UP CURB.
③ THE UNIT PRICE BID FOR REMOVAL OF CONCRETE MEDIAN BARRIER SHALL INCLUDE BUT NOT LIMITED TO: SAWING, THE REMOVAL OF STANDARD DESIGN SECTIONS, TRANSITION SECTIONS(BOTH SOLID AND SEPARATED SECTIONS), 4" CONCRETE DIVIDING STRIP, AND SAND BACKFILL WITHIN THE REMOVAL LIMITS SHOWN OR AS DIRECTED BY THE ENGINEER.
④ TRAFFIC ITEM.

REMOVAL QUANTITIES

	ITEM	DESCRIPTION	UNIT	QUANTITY THIS SHEET
	619(B)6356	REMOVAL OF CURB AND GUTTER	LF	433
	619(B)6360	REMOVAL OF CONCRETE PAVEMENT	SY	2,772
	619(B)6364	REMOVAL OF ASPHALT PAVEMENT	SY	571
	619(B)6368	REMOVAL OF DRAINAGE INLETS	EA	10
	619(B)6376	REMOVAL OF CONCRETE PAVEMENT W/ASPHALT OVERLAY	SY	3,731
	619(B)6396	REMOVAL OF GUARDRAIL	LF	100
	619(B)6416	REMOVAL OF CONCRETE MEDIAN BARRIER	LF	420
	619(B)6436	REMOVAL OF CONCRETE DITCH LINER	LF	89
	619(B)6440	REMOVAL OF EXISTING PIPE	LF	118
	619(C)6600	SAWING PAVEMENT	LF	1,788
④	805(A)3236	(PL)REMOVAL OF OVERHEAD SIGN STRUCTURE	EA	.
④	870(C)1300	SAND FILLED IMPACT ATTENUATION MODULE REMOVAL	LSUM	.

Survey	CKS	
Drawn	CKD	
Checked	CKE	
Approved		
Squad	C & K	

INTERCHANGE (OPERATIONAL IMPROVEMENTS) TULSA COUNTY

REMOVAL PLAN
RAMP "D", "E", & "F"

JOB PIECE NO. 10981(05) SHEET NO. R030

REGISTERED PROFESSIONAL ENGINEER ROBIN D. SEWELL 16173 OKLAHOMA 9/17/21

S:\Projects\ODOT\2015 EC-1710 I-44-169 Interchange\ACAD\PS&E\Plans\R027-R031-1098105-Removal Plans.dwg, R030, 9/17/2021 3:10:57 PM

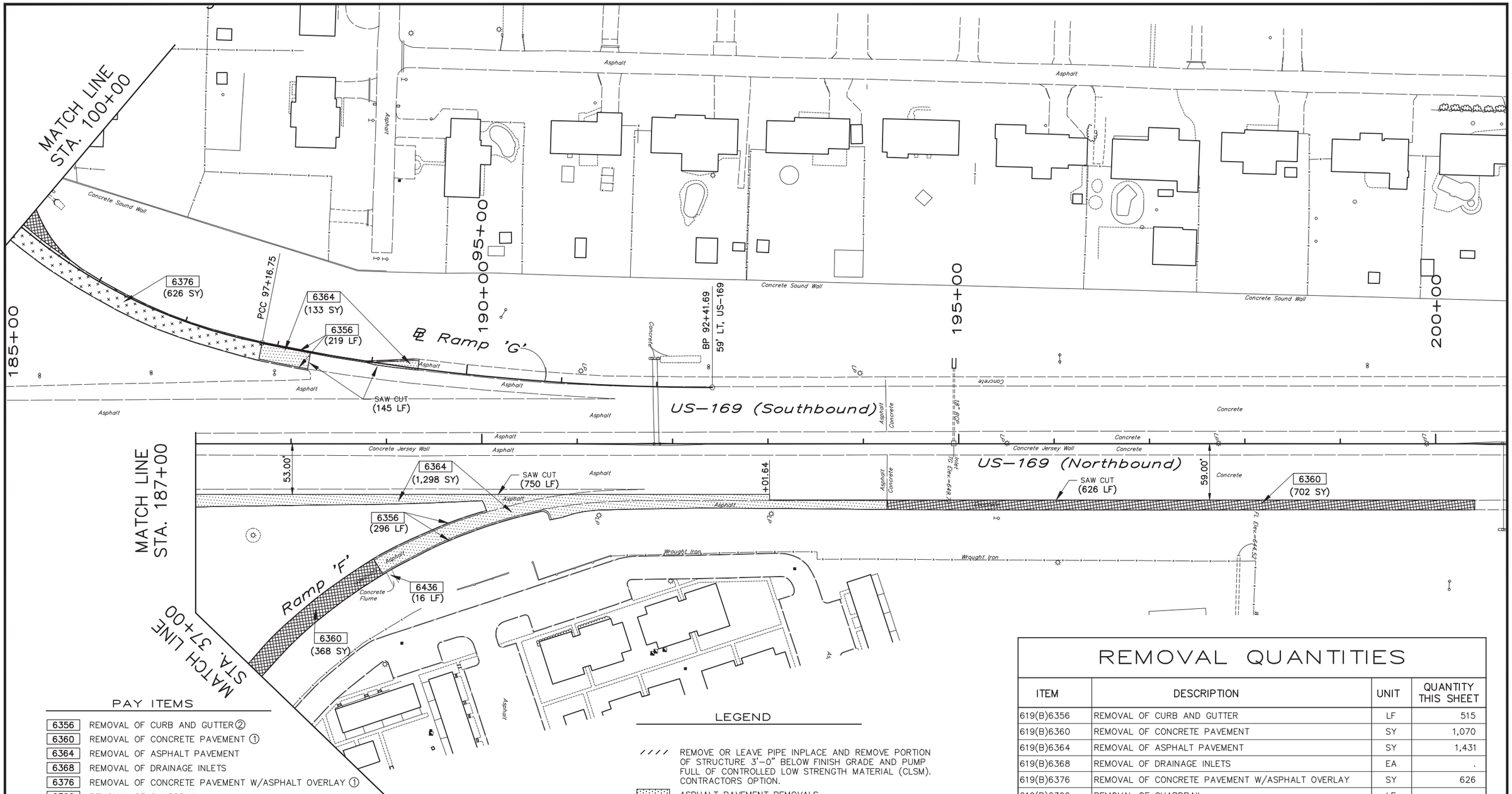

PAY ITEMS

6356	REMOVAL OF CURB AND GUTTER ②
6360	REMOVAL OF CONCRETE PAVEMENT ①
6364	REMOVAL OF ASPHALT PAVEMENT
6368	REMOVAL OF DRAINAGE INLETS
6376	REMOVAL OF CONCRETE PAVEMENT W/ASPHALT OVERLAY ①
6396	REMOVAL OF GUARDRAIL
6416	REMOVAL OF CONCRETE MEDIAN BARRIER ③
6436	REMOVAL OF CONCRETE DITCH LINER
6440	REMOVAL OF EXISTING PIPE
805(A) 3236	(PL)REMOVAL OF OVERHEAD SIGN STRUCTURE
870(C) 1300	SAND FILLED IMPACT ATTENUATION MODULE REMOVAL

PAY NOTES

① INCLUDES REMOVAL OF INTEGRAL CURB.

② INCLUDES STAND UP CURB.

③ THE UNIT PRICE BID FOR REMOVAL OF CONCRETE MEDIAN BARRIER SHALL INCLUDE BUT NOT LIMITED TO: SAWING, THE REMOVAL OF STANDARD DESIGN SECTIONS, TRANSITION SECTIONS(BOTH SOLID AND SEPARATED SECTIONS), 4" CONCRETE DIVIDING STRIP, AND SAND BACKFILL WITHIN THE REMOVAL LIMITS SHOWN OR AS DIRECTED BY THE ENGINEER.

④ TRAFFIC ITEM.

LEGEND

REMOVE OR LEAVE PIPE INPLACE AND REMOVE PORTION OF STRUCTURE 3'-0" BELOW FINISH GRADE AND PUMP FULL OF CONTROLLED LOW STRENGTH MATERIAL (CLSM). CONTRACTORS OPTION.

ASPHALT PAVEMENT REMOVALS

CONCRETE PAVEMENT REMOVALS

CONCRETE PAVEMENT W/ ASPHALT OVERLAY REMOVALS

0 50 100 150

REMOVAL QUANTITIES

	ITEM	DESCRIPTION	UNIT	QUANTITY THIS SHEET
	619(B)6356	REMOVAL OF CURB AND GUTTER	LF	515
	619(B)6360	REMOVAL OF CONCRETE PAVEMENT	SY	1,070
	619(B)6364	REMOVAL OF ASPHALT PAVEMENT	SY	1,431
	619(B)6368	REMOVAL OF DRAINAGE INLETS	EA	.
	619(B)6376	REMOVAL OF CONCRETE PAVEMENT W/ASPHALT OVERLAY	SY	626
	619(B)6396	REMOVAL OF GUARDRAIL	LF	.
	619(B)6416	REMOVAL OF CONCRETE MEDIAN BARRIER	LF	.
	619(B)6436	REMOVAL OF CONCRETE DITCH LINER	LF	16
	619(B)6440	REMOVAL OF EXISTING PIPE	LF	.
	619(C)6600	SAWING PAVEMENT	LF	1,521
④	805(A)3236	(PL)REMOVAL OF OVERHEAD SIGN STRUCTURE	EA	.
④	870(C)1300	SAND FILLED IMPACT ATTENUATION MODULE REMOVAL	LSUM	.

REGISTERED PROFESSIONAL ENGINEER
ROBERT L. SEWELL
16173
OKLAHOMA
9/17/21

Survey	CKS	
Drawn	CKD	
Checked	CKE	
Approved		
Squad	C & K	

INTERCHANGE (OPERATIONAL IMPROVEMENTS) TULSA COUNTY

REMOVAL PLAN
RAMP "F", & "G"

JOB PIECE NO. 10981(05) SHEET NO. R031

S:\Projects\ODOT\2015 EC-1710 I-44-169 Interchange\ACAD\PS&E\Plans\R027-R031-1098105-Removal Plans.dwg, R031, 9/17/2021 3:11:02 PM

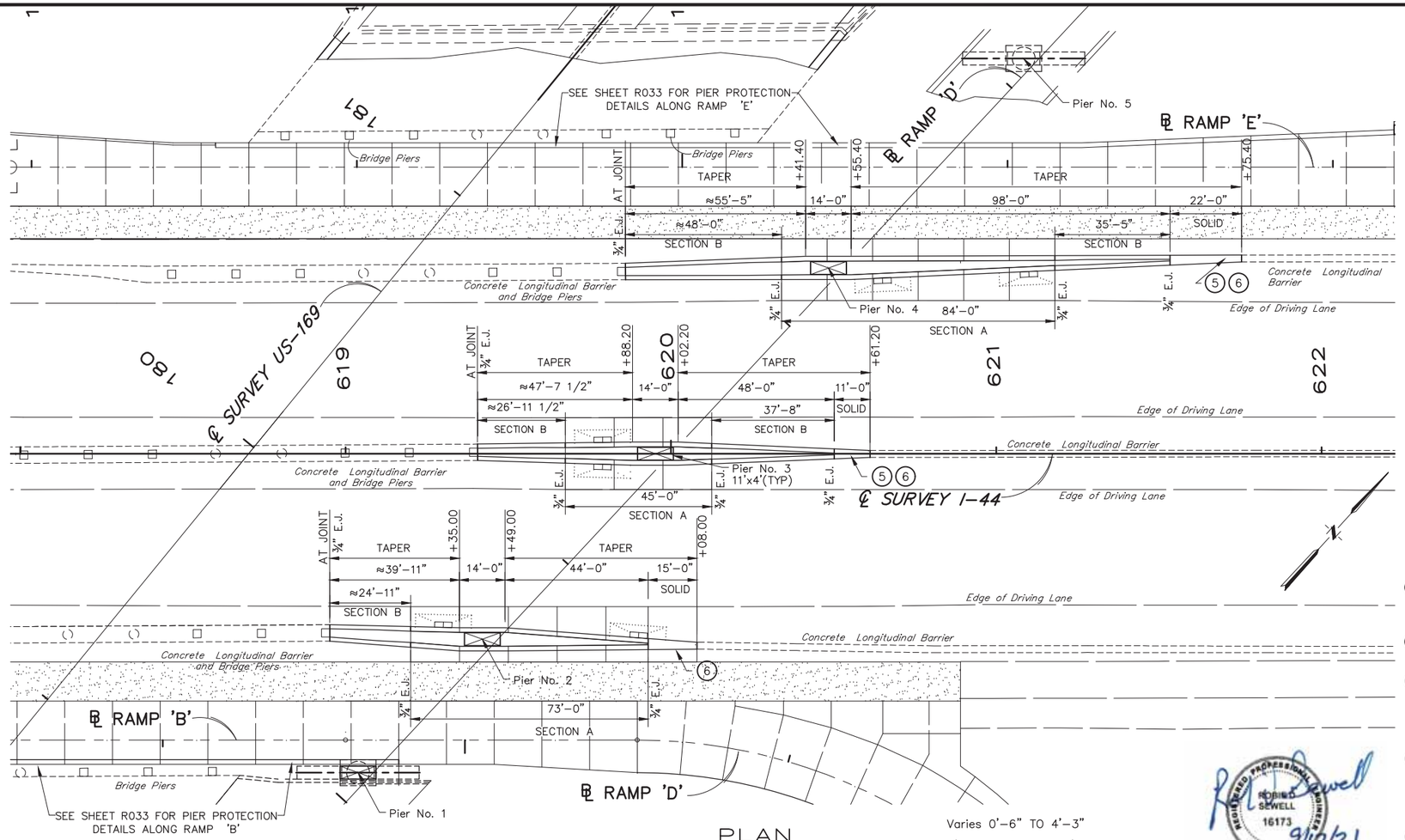

PLAN

STATIONS REFERENCE ℄ SURVEY I-44

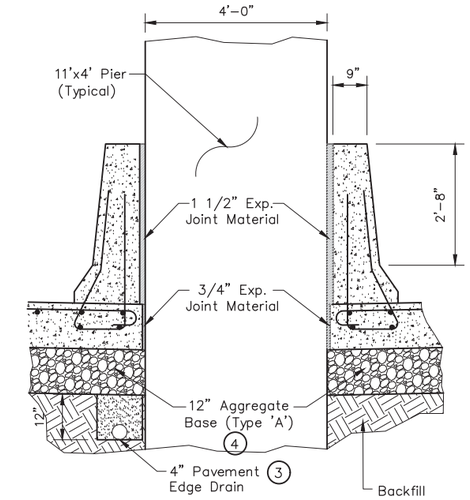

SECTION AT PIER 2,3,&4

NOTES

1. EXCEPT AS SHOWN ON THIS SHEET, PARAPETS SHALL BE CONSTRUCTED IN ACCORDANCE WITH STANDARD FSHP-42-2. ALL REINFORCING STEEL SHALL BE EPOXY COATED.
2. FS2, FS7, E1, AND A1 BARS SHALL BE INCLUDED IN THE ROADWAY ITEM 511(B) EPOXY COATED REINFORCING STEEL QUANTITIES.
3. PAVEMENT EDGE DRAIN : NEW PERFORATED EDGE DRAIN SHALL BE ALIGNED AROUND NEW PIER COLUM AS SHOWN AND CONNECTED TO EXISTING EDGE DRAIN SYSTEM OR AS DIRECTED BY THE ENGINEER. SEE ODOT STD. PED-4.
4. ANY EXISTING PAVEMENT BASE MATERIAL REMOVED OR DAMAGED DURING THE REMOVAL OF THE EXISTING PAVEMENT OR DURING EXCAVATING FOR PIER CONSTRUCTION SHALL BE REPLACED WITH AGGREGATE BASE AS SHOWN OR AS DIRECTED BY THE ENGINEER.
5. DOWEL BARS SHALL BE GRADE 60, EPOXY COATED. COST OF DRILLING AND INSTALLING DOWEL BARS SHALL BE INCLUDED IN THE UNIT PRICE BID FOR CONCRETE LONGITUDINAL BARRIER DESIGN 1. INCLUDE DOWEL BARS FOR SOLID TIE-IN SECTION WHEN CAST ON EXISTING OR NEW PAVEMENT.
6. TRANSITION BARRIER WALL HEIGHT IN 11' FROM END OF EXISTING BARRIER WALL – SEE TIE-IN PROFILE.

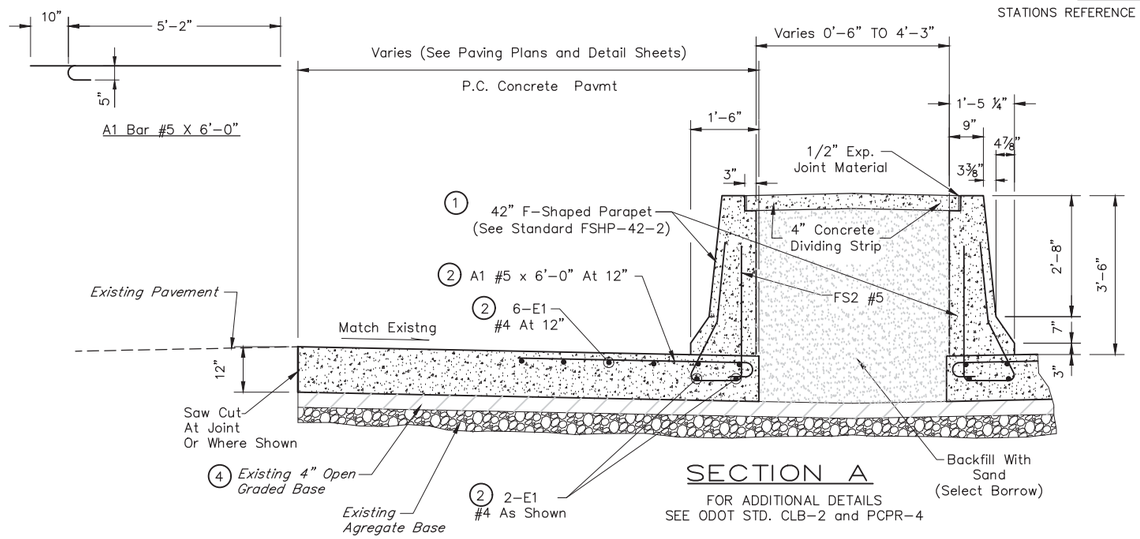

SECTION A

FOR ADDITIONAL DETAILS
SEE ODOT STD. CLB-2 and PCPR-4

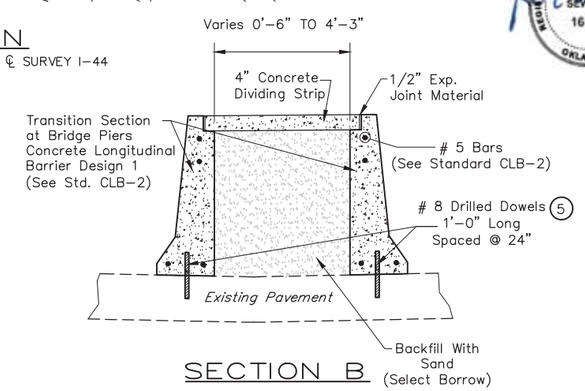

SECTION B

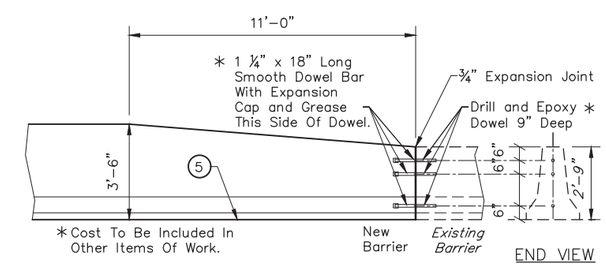

TI-IN PROFILE

FOR ADDITIONAL DETAILS
SEE ODOT STD. CLB-2 and PCPR-4

BASIS OF PAYMENT

ITEM	DESCRIPTION	UNIT
202(E)2600	SELECT BORROW	CY
504(E)5500	CONCRETE PARAPET	LF
504(E)5520	42" F-SHAPED PARAPET	LF
510(C)1440	SLOPE WALL (5")	SY
610(C)5400	4" CONCRETE DIVIDING STRIP	SY
627(A)6200	CONCRETE LONGITUDINAL BARRIER, DESIGN 1	LF

REGISTERED PROFESSIONAL ENGINEER ROBIN D. SEWELL 16173 OKLAHOMA
9/17/21

Survey	CKS	
Drawn	CKD	
Checked	CKE	
Approved		
Squad	C & K	

INTERCHANGE (OPERATIONAL IMPROVEMENTS) TULSA COUNTY

PIER PROTECTION DETAILS
PIER 2, PIER 3, & PIER 4

JOB PIECE NO. 10981(05) SHEET NO. R032

S:\Projects\ODOT\2015 EC-1710 I-44-169 Interchange\ACAD\PS&E\Plans\R032-R033-1098105-Pier Protection Details.dwg, R032, 9/17/2021 3:11:18 PM

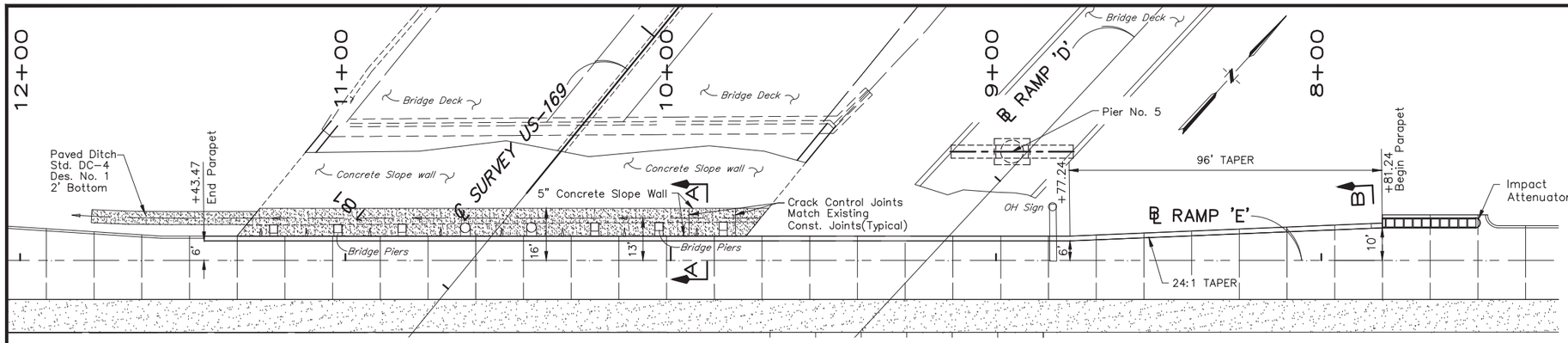

PLAN

PIER PROTECTION ALONG RAMP 'E'

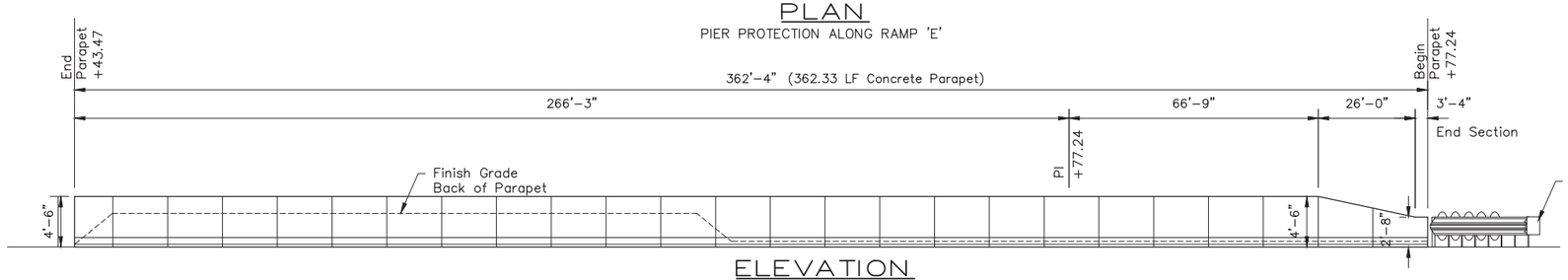

ELEVATION

PIER PROTECTION ALONG RAMP 'E'

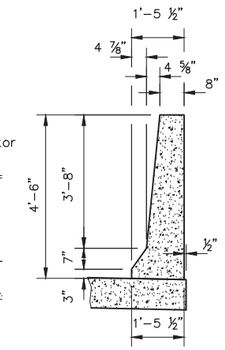

54" PARAPET

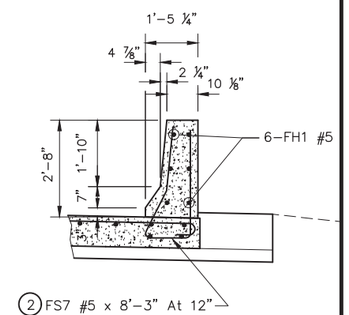

SECTION B-B

See Sheet R032 For Note 2

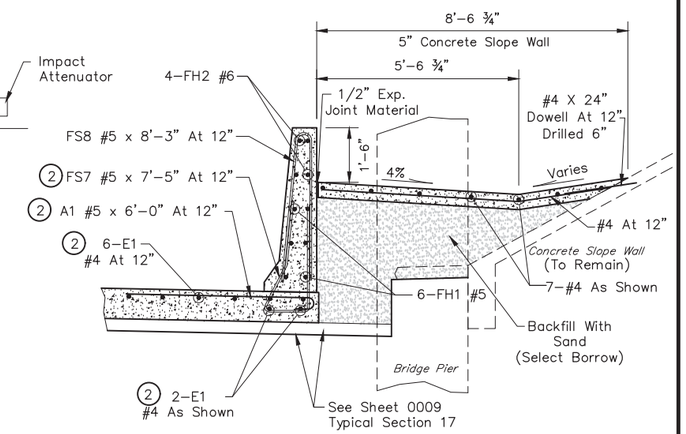

SECTION A-A

See Sheet R032 For Note 2

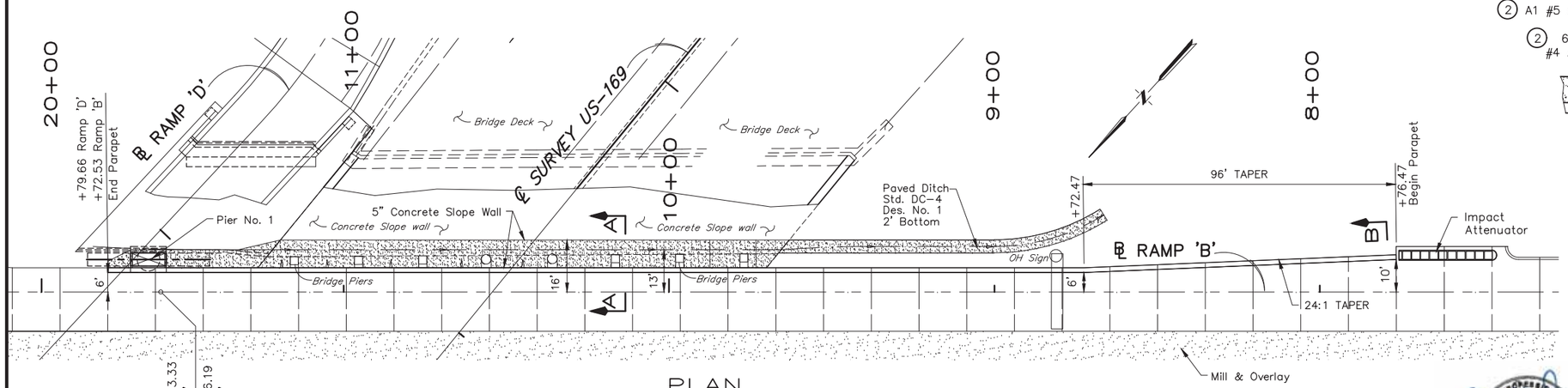

PLAN

PIER PROTECTION ALONG RAMP 'B'

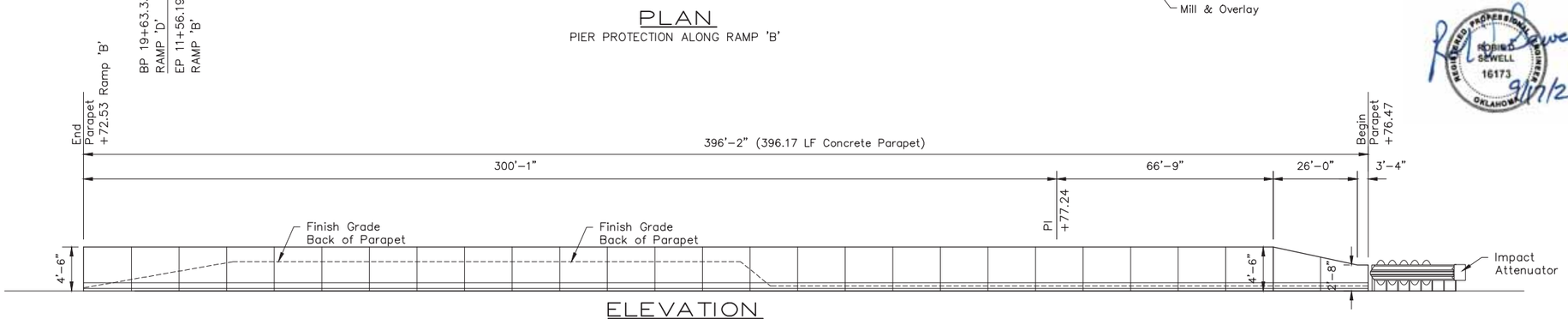

ELEVATION

PIER PROTECTION ALONG RAMP 'B'

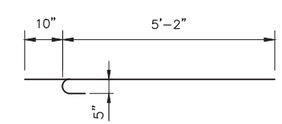

A1 Bar #5 X 6'-0"

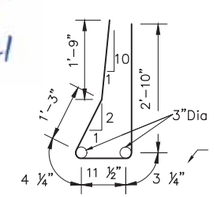

FS7 Bar #5 X 7'-5"

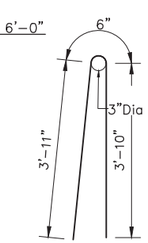

FS8 Bar #5 X 8'-3"

REGISTERED PROFESSIONAL ENGINEER
ROBERT SEWELL
16173
OKLAHOMA
9/17/21

Survey	CKS	
Drawn	CKD	
Checked	CKE	
Approved		
Squad	C & K	

INTERCHANGE (OPERATIONAL IMPROVEMENTS) TULSA COUNTY

PIER PROTECTION DETAILS ALONG RAMP 'B' AND RAMP 'E'

JOB PIECE NO. 10981(05) SHEET NO. R033

S:\Projects\ODOT\2015 EC-1710 I-44-169 Interchange\ACAD\PS&E\Plans\R032-R033-1098105-Pier Protection Details.dwg, R033, 9/17/2021 3:11:22 PM

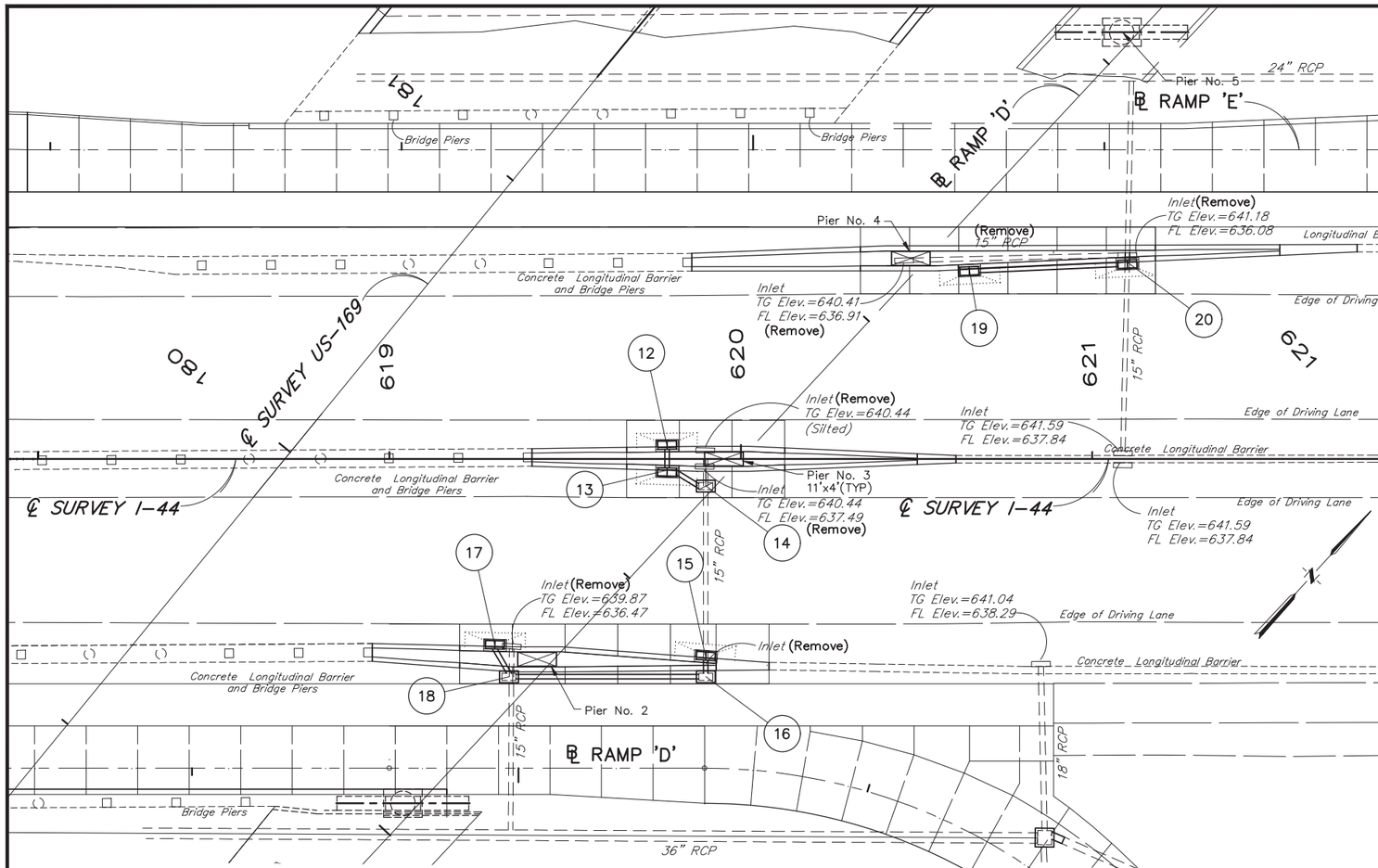

PLAN

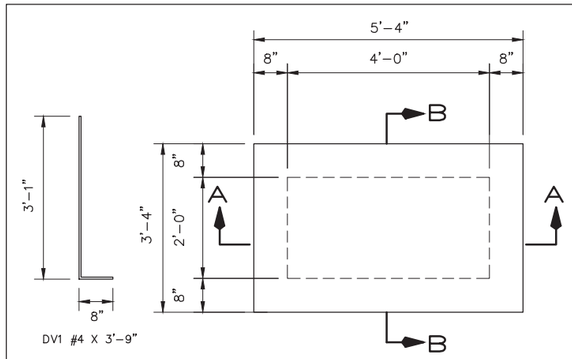

PLAN

GENERAL NOTES

1. ALL CONSTRUCTION AND MATERIAL REQUIREMENTS SHALL BE IN ACCORDANCE WITH THE 2019 OKLAHOMA STANDARD SPECIFICATIONS FOR HIGHWAY CONSTRUCTION.

CONCRETE (CLASS A) F'C = 3 KSI
REINFORCING STEEL FY = 60 KSI

3. ALL REINFORCING STEEL SHALL HAVE A 2" MINIMUM CLEAR COVER UNLESS OTHERWISE SHOWN.

2. THERE WILL BE NO DEDUCTION OF FOR VOLUME OF CLASS A CONCRETE FOR SMALL STRUCTURES FOR PIPE.

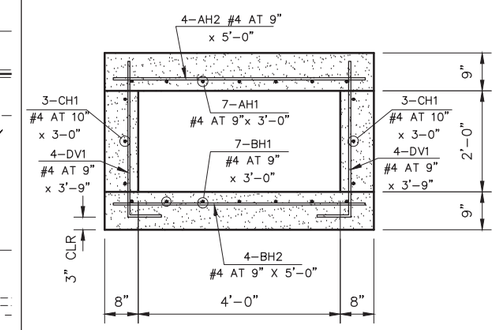

SECTION A-A

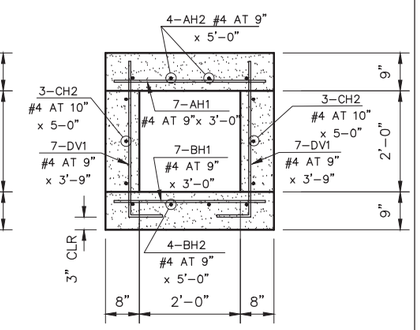

SECTION B-B

PAY ITEMS FOR ONE (1) SPECIAL JUNCTION BOX
509(C)0400 CLASS A CONCRETE, SMALL STRUCTURES =1.71 CY
511(A)2200 REINFORCING STEEL = 142 LB

SPECIAL JUNCTION BOX
STRUCTURE 14, 16, & 18

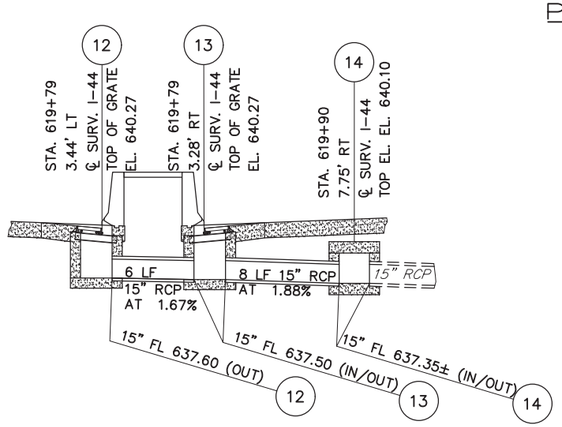

PROFILE
STRUCTURES 12, 13 & 14

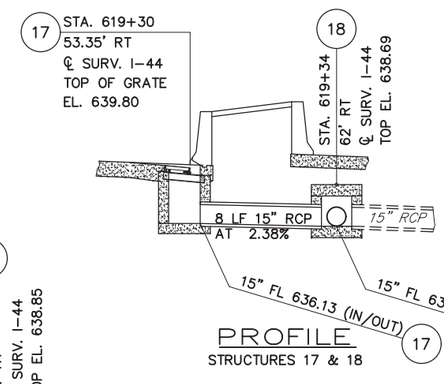

PROFILE
STRUCTURES 17 & 18

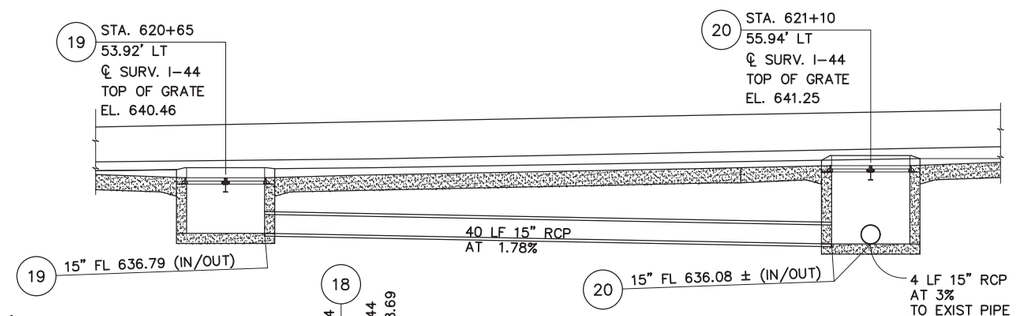

PROFILE
STRUCTURES 19 & 20

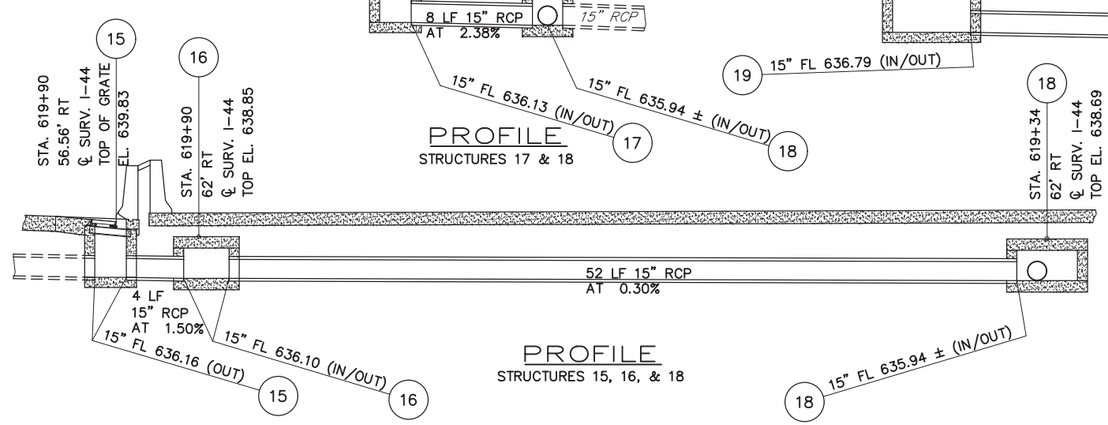

PROFILE
STRUCTURES 15, 16, & 18

REGISTERED PROFESSIONAL ENGINEER
ROBERT D. SEWELL
16173
OKLAHOMA
9/17/21

Survey	CKS		INTERCHANGE (OPERATIONAL IMPROVEMENTS) TULSA COUNTY
Drawn	CKD		**DRAINAGE DETAILS**
Checked	CKE		
Approved			
Squad	C & K		JOB PIECE NO. 10981(05) SHEET NO. R034

S:\Projects\ODOT\2015 EC-1710 I-44-169 Interchange\ACAD\PS&E\Plans\R034 -1098105-Drainage Details.dwg, R034, 9/17/2021 3:11:28 PM

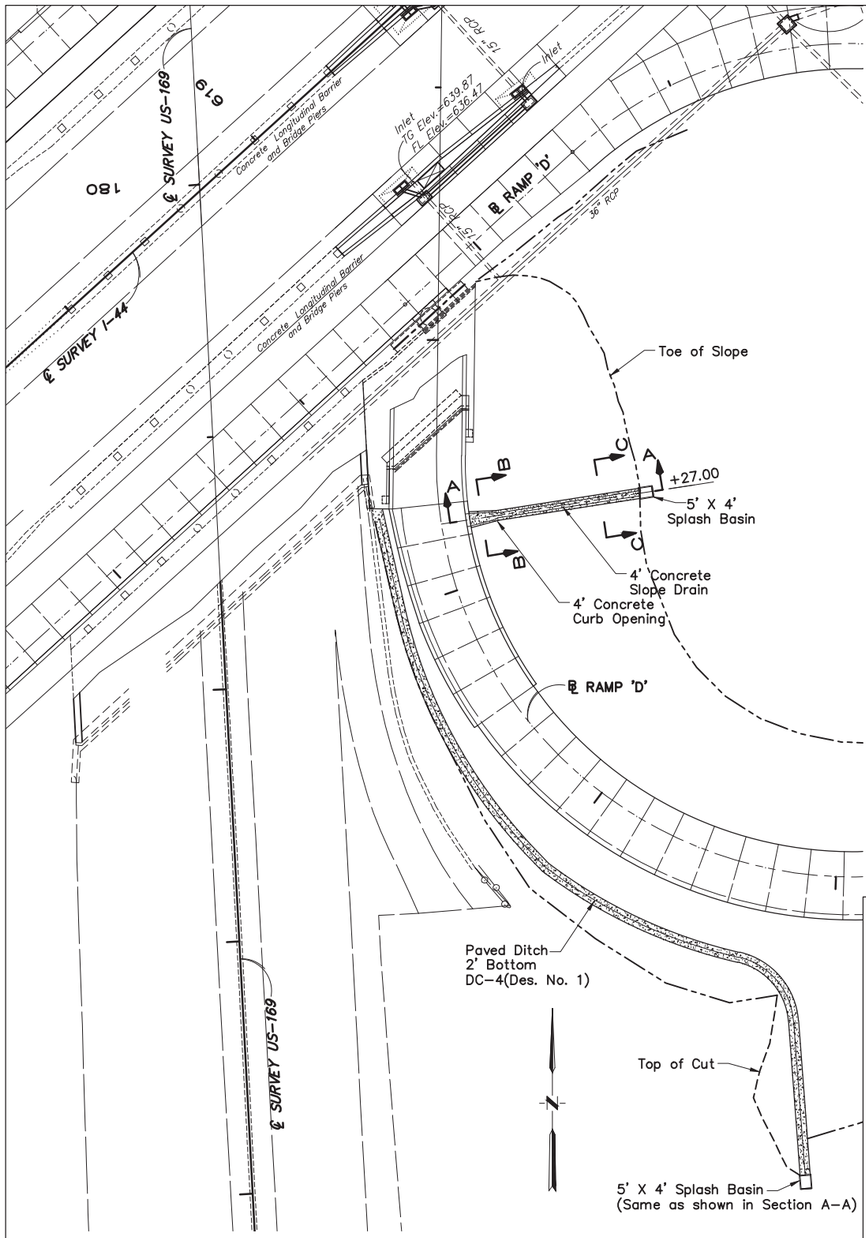

PLAN

Drain at End of Bridge

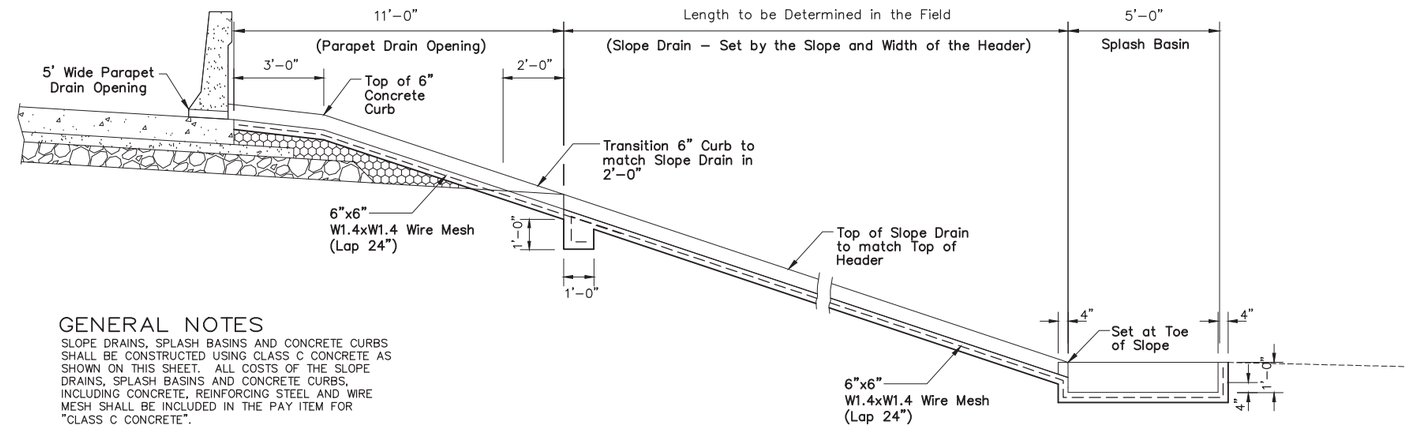

GENERAL NOTES

SLOPE DRAINS, SPLASH BASINS AND CONCRETE CURBS SHALL BE CONSTRUCTED USING CLASS C CONCRETE AS SHOWN ON THIS SHEET. ALL COSTS OF THE SLOPE DRAINS, SPLASH BASINS AND CONCRETE CURBS, INCLUDING CONCRETE, REINFORCING STEEL AND WIRE MESH SHALL BE INCLUDED IN THE PAY ITEM FOR "CLASS C CONCRETE".

SECTION A–A

Drain Section

℄ Sta. 29+27, Rt. ℄ Ramp 'D'

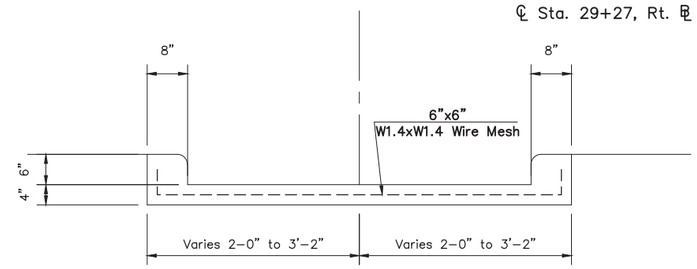

SECTION B–B

Concrete Parapet Opening

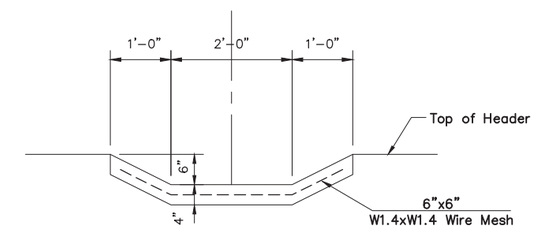

SECTION C–C

Concrete Slope Drain

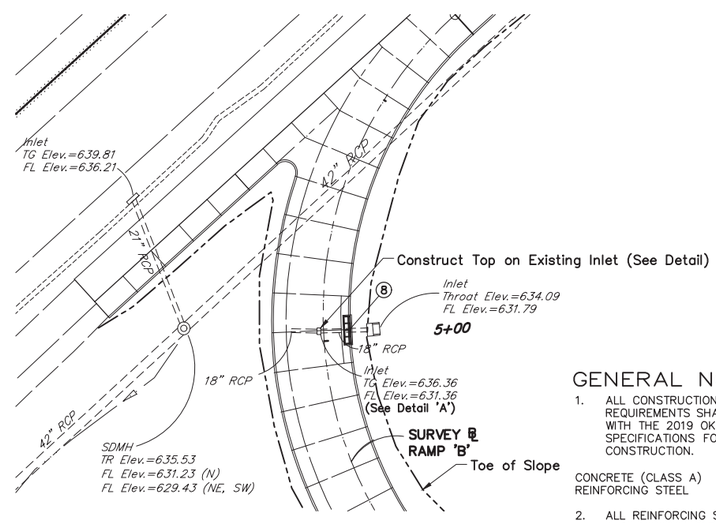

PLAN

Structure 8

(Similar for Structure 9)

GENERAL NOTES

1. ALL CONSTRUCTION AND MATERIAL REQUIREMENTS SHALL BE IN ACCORDANCE WITH THE 2019 OKLAHOMA STANDARD SPECIFICATIONS FOR HIGHWAY CONSTRUCTION.

CONCRETE (CLASS A) F'C = 3 KSI
REINFORCING STEEL FY = 60 KSI

2. ALL REINFORCING STEEL SHALL HAVE A 2" MINIMUM CLEAR COVER UNLESS OTHERWISE SHOWN.

3. ALL COSTS INCLUDING CONCRETE, REINFORCING STEEL SHALL BE INCLUDED IN PAY ITEM FOR "CLASS A CONCRETE, SMALL STRUCTURES', ESTIMATED AT 0.52 CY PER TOP.

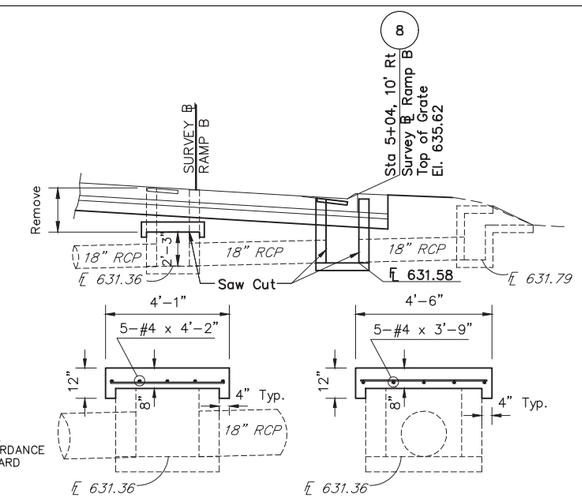

DETAIL

Structure No. 8

Survey	CKS		INTERCHANGE (OPERATIONAL IMPROVEMENTS) TULSA COUNTY
Drawn	CKD		DRAINAGE DETAILS
Checked	CKE		
Approved			
Squad	C & K		JOB PIECE NO. 10981(05) SHEET NO. R035

REGISTERED PROFESSIONAL ENGINEER ROBIN L SEWELL 16173 OKLAHOMA 9/17/21

S:\Projects\ODOT\2015 EC-1710 I-44-169 Interchange\ACAD\PS&E\Plans\R035 -1098105-Drainage Details.dwg, R035, 9/17/2021 3:11:33 PM

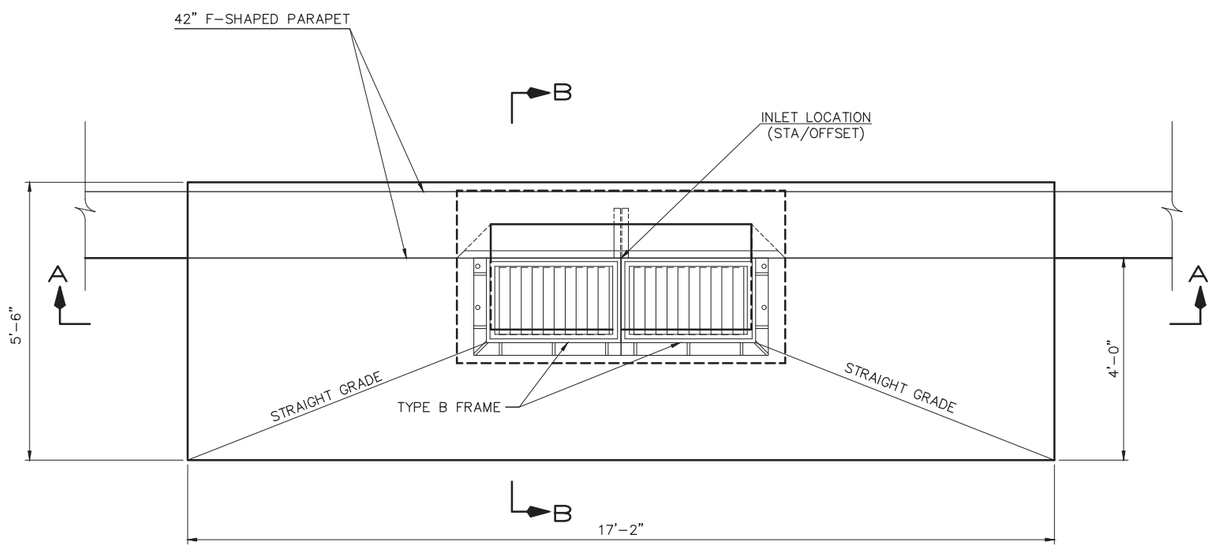

PLAN

INLET-LONGITUDINAL BARRIER-TYPE I, DES 2

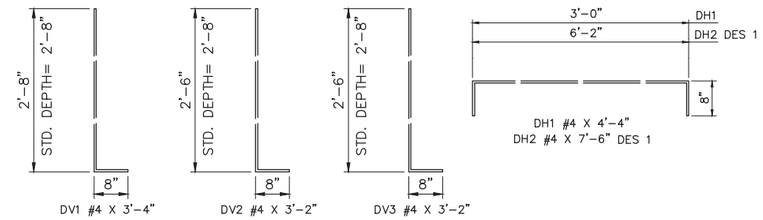

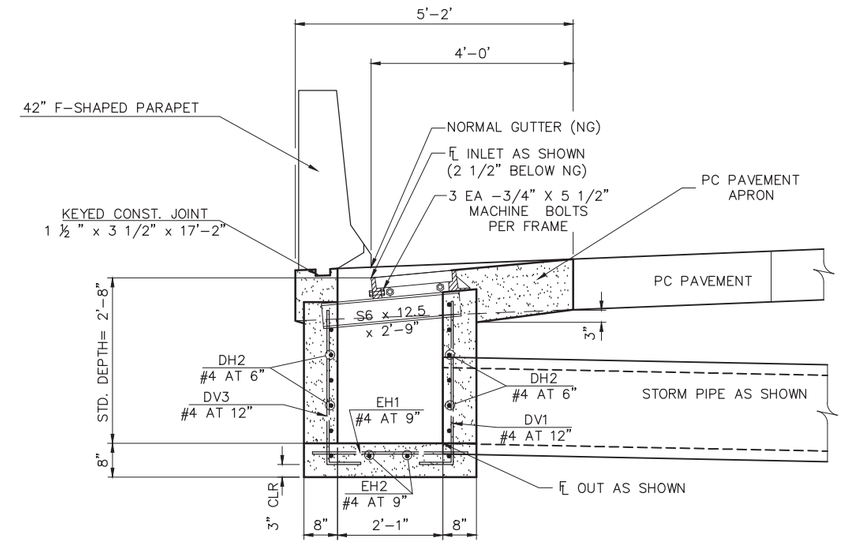

SECTION B-B

INLET-LONGITUDINAL BARRIER-TYPE I

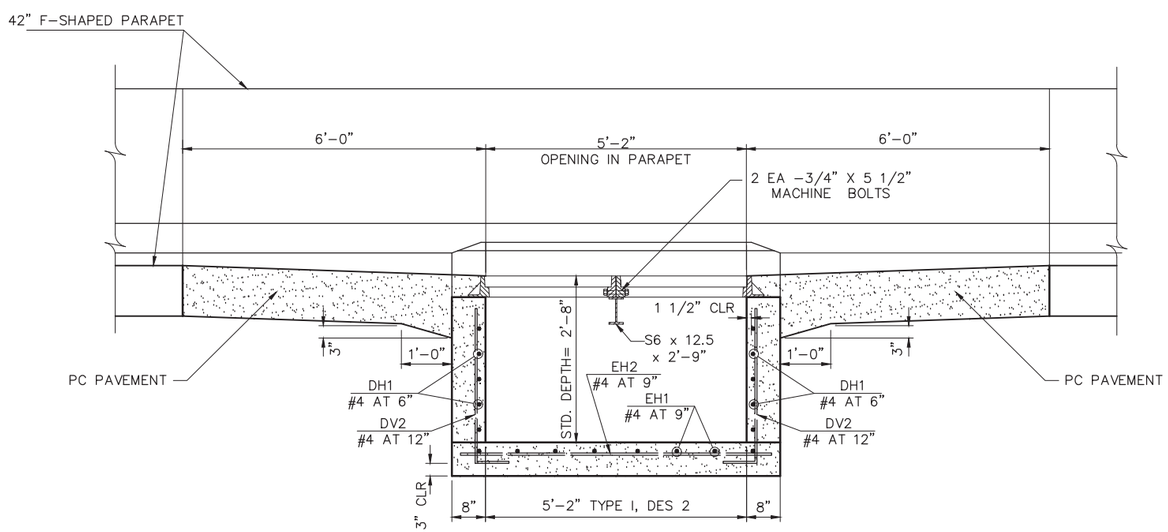

SECTION A-A

INLET-LONGITUDINAL BARRIER-TYPE I, DES 2

GENERAL NOTES

1. ALL CONSTRUCTION AND MATERIAL REQUIREMENTS SHALL BE IN ACCORDANCE WITH THE 2019 OKLAHOMA STANDARD SPECIFICATIONS FOR HIGHWAY CONSTRUCTION.
   CONCRETE (CLASS A) F'C = 3 KSI
   REINFORCING STEEL FY = 60 KSI
2. EXPOSED CONCRETE EDGES SHALL HAVE A 3/4" CHAMFER SURFACES SHALL BE FINISHED IN ACCORDANCE WITH SECTION 509 OF THE STANDARD SPECIFICATIONS.
3. ALL REINFORCING STEEL SHALL HAVE A 2" MINIMUM CLEAR COVER UNLESS OTHERWISE SHOWN.
4. STANDARD SSIF-5 FRAMES AND STANDARD CIG-4 GRATES TO BE USED WITH THESE INLETS. COST OF THESE ITEMS SHALL BE INCLUDED IN THE COST OF THE COMPLETED INLET.
5. THE INLET APRON MAY BE BUILT OF THE SIZE SHOWN ON THIS SHEET OR MAY BE PLACED INTEGRALLY WITH CONCRETE PAVEMENT, THE THICKNESS IN EITHER CASE SHALL BE THE SAME AS THE PAVEMENT. COST SHALL BE INCLUDED IN PRICE BID FOR P.C. CONCRETE PAVEMENT.
6. THERE WILL BE NO DEDUCTION OF PAYMENT FOR P.C. CONCRETE PAVEMENT THRU THE EXTENT OF THE INLETS FRAMES AND GRATES.
7. THE COST FOR CONCRETE AND REINFORCING STEEL SHALL BE INCLUDED IN THE AMOUNT BID FOR EACH INLET, INLUDING ANY NECESSARY FOR ADDITIONAL INLET DEPTH. ADDITIONAL DEPTH SHALL BE INLUDED IN THE PRICE BID FOR THE INLET.

PAY ITEMS

ITEM	DESCRIPTION	UNIT
611(G)8155	INLET - LONGITUDINAL BARRIER -TYPE I, DES. 2	EA

REGISTERED PROFESSIONAL ENGINEER
RODNEY SEWELL
16173
OKLAHOMA
9/17/21

Design	CKS	
Drawn	CKD	
Checked	CKE	
Approved		
Squad	C & K	

INTERCHANGE (OPERATIONAL IMPROVEMENTS) TULSA COUNTY

INLET - LONGITUDINAL BARRIER - TYPE I

JOB PIECE NO. 10981(05) SHEET NO. R036

S:\Projects\ODOT\2015 EC-1710 I-44-169 Interchange\ACAD\PS&E\Plans\R036-10981(05)-Inlet Longitudinal Barrier Type I.dwg, 11x17, 9/17/2021 3:11:38 PM

SEQUENCE OF CONSTRUCTION

PHASE 1 (ORANGE) ⚠

ROADWAY

- INSTALL NEW OVERHEAD SIGN MEDIAN FOOTING NEAR STA. 600+00 (PHASE 1A)
  - o CLOSE INSIDE LANE I-44 EB AND WB AND DEMO EXISTING MEDIAN BARRIER WALL
  - o RE-ROUTE ELECTRICAL CONDUIT AND WIRING AS REQUIRED
  - o INSTALL NEW SIGN FOOTING AND MEDIAN BARRIER
  - o REMOVE PORTABLE BARRIER AND RE-OPEN INSIDE LANE I-44 EB AND WB
- CONSTRUCT RAMP G (RAMP G SHALL REMAIN OPEN AT ALL TIMES)
  - o (PHASE 1A) INSTALL BARRIER WALL AND CONSTRUCT SCAB-ON WIDENING EAST SIDE OF EXISTING RAMP TO MAINTAIN TRAFFIC UPSTREAM OF MERGE POINT.
  - o (PHASE 1B) CLOSE OUTSIDE LANE I-44 WESTBOUND W/ ARROW BOARD AND DRUMS TO ACCOMMODATE RAMP G TRAFFIC, SHIFT RAMP G TRAFFIC ONTO SCAB-ON DETOUR, RELOCATE PHASE 1A BARRIER WALL AND CLOSE AUXILIARY LANE W/ ADDITIONAL BARRIER WALL TO REMOVE EXISTING SHOULDER AND ADD AUXILIARY LANE, SHOULDER & NEW OUTSIDE OVERHEAD SIGN FOOTING DOWNSTREAM OF MERGE POINT. REMOVE EXISTING OVERHEAD SIGN STRUCTURE I-44 WB, TRANSFER EXISTING SIGNS, AND INSTALL NEW OVERHEAD SIGN STRUCTURE. INSTALL NEW I-44 WB ROADSIDE SIGNS.
  - o (PHASE 1C) REMOVE BARRIER WALL AND NORMALIZE RAMP G. REMOVE SCAB-ON DETOUR, SHAPE FORESLOPE, AND FINISH SHOULDERING / DRESSING RAMP G.

BRIDGE "A"

- CONSTRUCT PIERS 5 THRU 10.

SBR BRIDGE – NO WORK THIS PHASE

PHASE 2 (BLUE) ⚠

ROADWAY

- CLOSE AND RECONSTRUCT WESTBOUND C-D ROAD INCLUDING RAMPS E, F AND H
  - o DETOUR RAMP E (NB US-169 TO WB I-44) TRAFFIC
- (ADVANCE) 169 NORTH TO SH-51 WEST TO I-44 WEST
- (PROPER) 169 NORTH TO I44 EAST TO 129TH/ E. AVE. TURNAROUND TO I-44 WEST
  - o DETOUR RAMP F (WB I-44 TO NB US-169) & RAMP H (WB I-44 TO SB US-169) TRAFFIC
- (ADVANCE) I-44 WEST TO I-244 WEST TO US-169 NORTH / SOUTH
- (PROPER) I-44 WEST TO SH-51 EAST TO US-169 NORTH / SOUTH
- BEGIN EARTHWORK FOR RAMPS D AND F, ABUTMENT 2 HEADER BRIDGE "A", AND RETAINING WALL C
- RE-OPEN WESTBOUND C-D ROAD AND RAMPS E AND H
  - o RAMP F REMAINS CLOSED (REVISE DETOUR SIGNS FOR US-169 NORTH ONLY)

BRIDGE "A" (OVERLAP WITH END OF PHASE 1B AND COORDINATE TRAFFIC CONTROL WITH PHASE 1C)

- CONSTRUCT PIER 4.
  - o COORDINATE I-44 WESTBOUND OUTSIDE LANE CLOSURE (W/ BARRIER WALL NEAR PIER) WITH PHASE 1B OR WORK INDEPENDENT OF PHASE 1.
  - o COMPLETE AND OPEN I-44 WEST OUTSIDE LANE.

SBR BRIDGE

- (PHASE 2A) US-169 SUBSTRUCTURE AND SB OUTSIDE LANES DECK REPAIR
  - o SHIFT TRAFFIC AND INSTALL PORTABLE LONGITUDINAL BARRIER AS SHOWN
  - o MODIFY SHOULDERS ON SB US-169 AS SHOWN IN PLANS
  - o PERFORM EXPANSION JOINT REPAIR AND FLOODCOATING IN WORK ZONE ON DECK
  - o PERFORM SUBSTRUCTURE & SUPERSTRUCTURE REPAIRS AT PIERS NO. 4 & 5 AND ABUTMENT NO. 2
  - o CONSTRUCT NEW PIER BARRIER ALONG WESTBOUND CD ROAD
- (PHASE 2B) US-169 SUBSTRUCTURE AND SB INSIDE LANES DECK REPAIR
  - o SHIFT TRAFFIC AND RELOCATE PORTABLE LONGITUDINAL BARRIER AS SHOWN
  - o PERFORM EXPANSION JOINT REPAIR AND FLOODCOATING IN WORK ZONE ON DECK
  - o COMPLETE SUBSTRUCTURE & SUPERSTRUCTURE REPAIRS AT PIERS NO. 4 & 5 AND ABUTMENT NO. 2
  - o REMOVE PORTIBLE LONGITUDINAL BARRIER AND NORMALIZE SB US-169

PHASE 3 (GREEN) ⚠

ROADWAY

- RAMP F REMAINS CLOSED
- CONSTRUCT ABUTMENT 1 HEADER BRIDGE "A"
- COMPLETE EARTHWORK AND RETAINING WALLS B & C, PAVING RAMP F, AND NORTH END OF RAMP D
  - o CLOSE US-169 NORTHBOUND OUTSIDE AUXILIARY LANE UP TO OVERHEAD TRAFFIC SIGN W / USE OF BARRIER WALL.
- RE-OPEN RAMP F

BRIDGE "A"

- (PHASE 3A) CONSTRUCT ABUTMENTS 1 AND 2.
- (PHASE 3A) CONSTRUCT PIER 1
  - o SHIFT EASTBOUND C-D ROAD TO THE NORTH AND WORK BESIDE TRAFFIC W/ USE OF BARRIER WALL.
- (PHASE 3B) CONSTRUCT PIER 2
  - o SHIFT EASTBOUND C-D ROAD TO THE SOUTH AND WORK BESIDE TRAFFIC W / USE OF BARRIER WALL.
  - o CLOSE I-44 EASTBOUND OUTSIDE LANE W / USE OF BARRIER WALL.
- (PHASE 3C) CONSTRUCT PIER 3, PIER PROTECTION BARRIER, AND DRAINAGE INLETS
  - o CLOSE I-44 EAST & WEST INSIDE LANE W / USE OF BARRIER WALL.
- (PHASE 3D) COMPLETE BRIDGE "A" (BEAMS / DECKING / PARAPETS)

SBR BRIDGE (COORDINATE REPAIRS WITH BRIDGE "A" CONSTRUCTION PHASE 3 AND/OR 4)

- PERFORM SUBSTRUCTURE & SUPERSTRUCTURE
- REPAIRS AT PIERS NO. 1, 2, & 3 AND ABUTMENT NO. 1

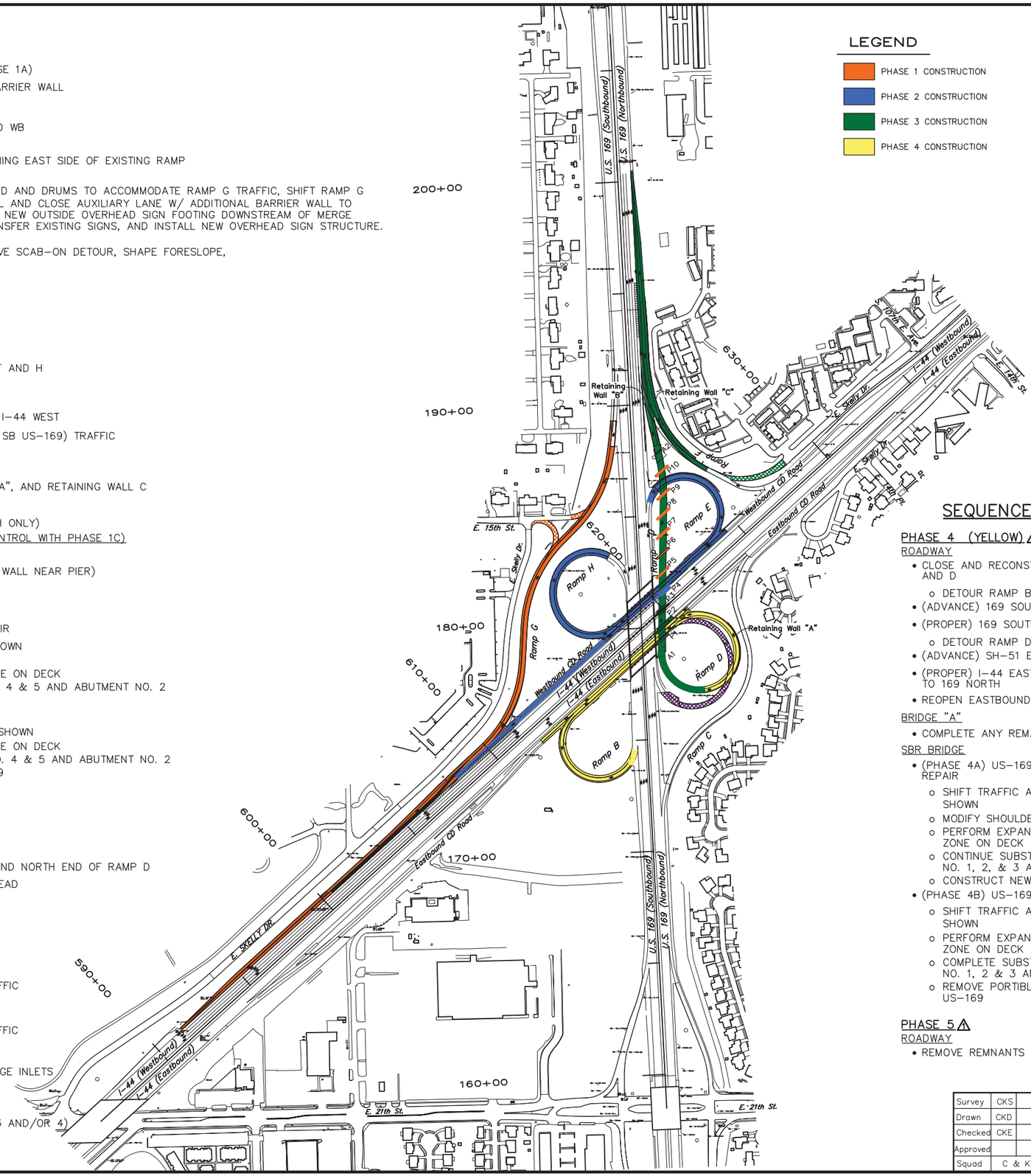

REV. NO.	REVISION DESCRIPTION	DATE
⚠	REMOVE (DAYS)	05-13-2022

REGISTERED PROFESSIONAL ENGINEER ROBIN D. SEWELL 16173 OKLAHOMA 9/17/21

SEQUENCE OF CONSTRUCTION

PHASE 4 (YELLOW) ⚠

ROADWAY

- CLOSE AND RECONSTRUCT EASTBOUND C-D ROAD INCLUDING RAMPS B AND D
  - o DETOUR RAMP B (SB US-169 TO EB I-44) TRAFFIC
- (ADVANCE) 169 SOUTH TO I-244 EAST TO I-44 EAST
- (PROPER) 169 SOUTH TO SH-51 WEST TO I-44 EAST
  - o DETOUR RAMP D (EB I-44 TO NB US-169) TRAFFIC
- (ADVANCE) SH-51 EAST TO 169 NORTH
- (PROPER) I-44 EAST TO 129TH/ E. AVE. TURNAROUND TO I-44 WEST TO 169 NORTH
- REOPEN EASTBOUND C-D ROAD AND RAMPS B AND D

BRIDGE "A"

- COMPLETE ANY REMAINING WORK ON BRIDGE "A"

SBR BRIDGE

- (PHASE 4A) US-169 SUBSTRUCTURE AND NB OUTSIDE LANES DECK REPAIR
  - o SHIFT TRAFFIC AND INSTALL PORTABLE LONGITUDINAL BARRIER AS SHOWN
  - o MODIFY SHOULDERS ON SB US-169 AS SHOWN IN PLANS
  - o PERFORM EXPANSION JOINT REPAIR AND FLOODCOATING IN WORK ZONE ON DECK
  - o CONTINUE SUBSTRUCTURE & SUPERSTRUCTURE REPAIRS AT PIERS NO. 1, 2, & 3 AND ABUTMENT NO. 1
  - o CONSTRUCT NEW PIER BARRIER ALONG EASTBOUND CD ROAD
- (PHASE 4B) US-169 SUBSTRUCTURE AND NB INSIDE LANES DECK REPAIR
  - o SHIFT TRAFFIC AND RELOCATE PORTABLE LONGITUDINAL BARRIER AS SHOWN
  - o PERFORM EXPANSION JOINT REPAIR AND FLOODCOATING IN WORK ZONE ON DECK
  - o COMPLETE SUBSTRUCTURE & SUPERSTRUCTURE REPAIRS AT PIERS NO. 1, 2 & 3 AND ABUTMENT NO. 1
  - o REMOVE PORTIBLE LONGITUDINAL BARRIER AND NORMALIZE NB US-169

PHASE 5 ⚠

ROADWAY

- REMOVE REMNANTS OF EXISTING RAMP D, SHAPE AND DRESS SLOPES

Survey	CKS	
Drawn	CKD	
Checked	CKE	
Approved		
Squad	C & K	

INTERCHANGE (OPERATIONAL IMPROVEMENTS) TULSA COUNTY

CONSTRUCTION SEQUENCE OVERVIEW

JOB PIECE NO. 10981(05) SHEET NO. R037

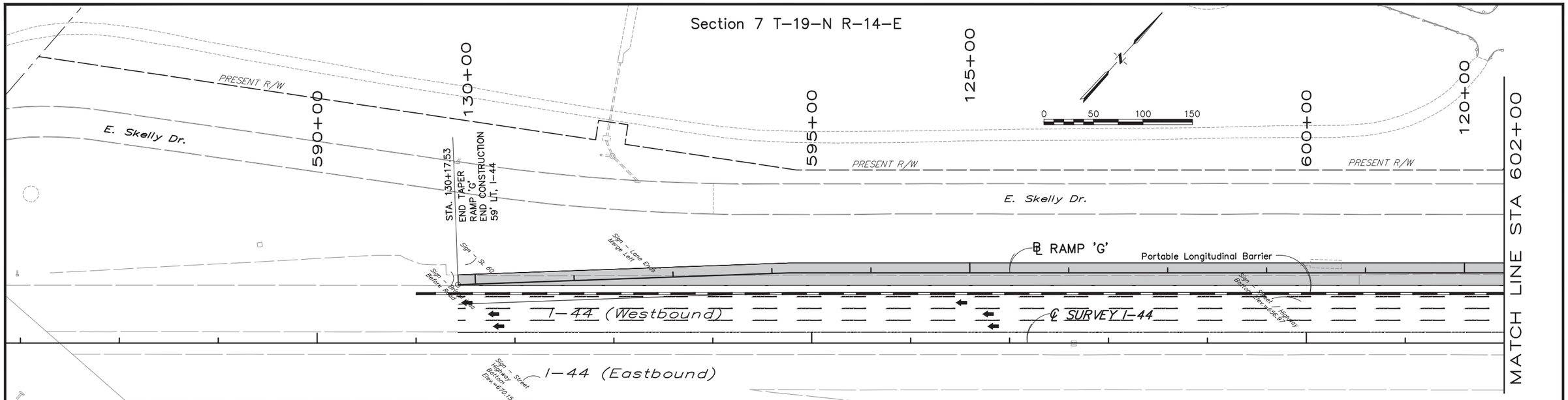

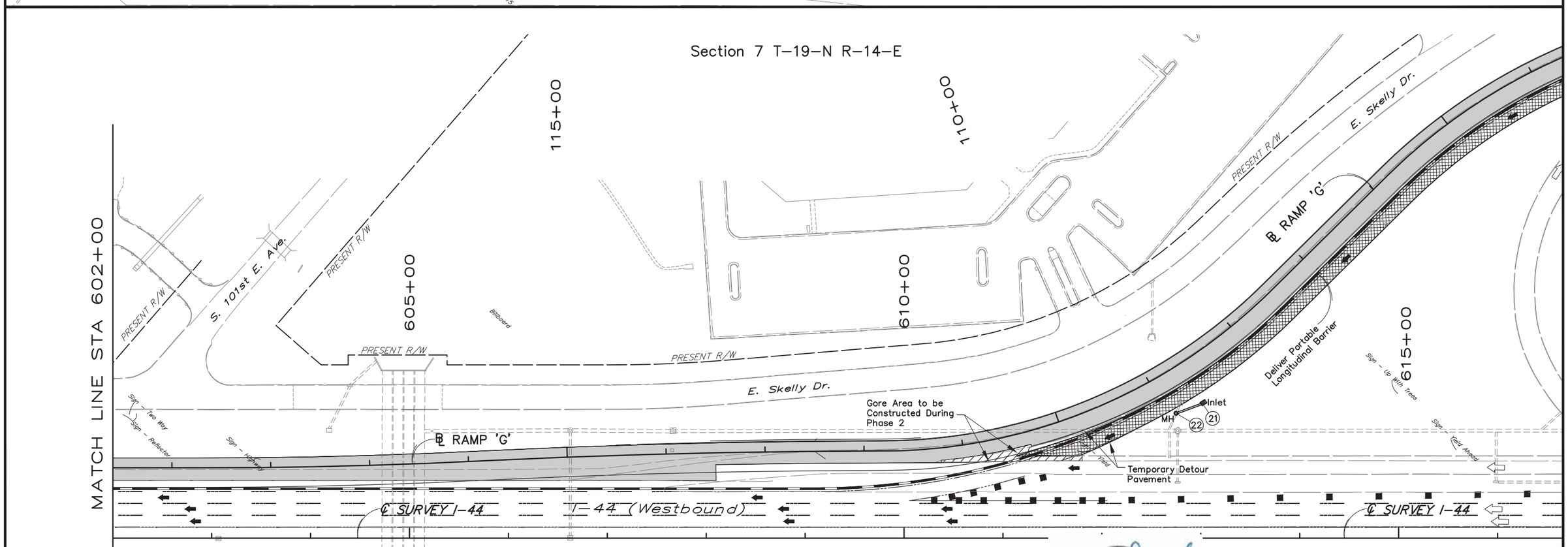

Survey	CKS	
Drawn	CKD	
Checked	CKE	
Approved		
Squad	C & K	

INTERCHANGE (OPERATIONAL IMPROVEMENTS) TULSA COUNTY

PHASE 1 CONSTRUCTION

JOB PIECE NO. 10981(05) SHEET NO. R038

S:\Projects\ODOT\2015 EC-1710 I-44-169 Interchange\ACAD\PS&E\Plans\R038-R040-10981(05-Phase 1 Construction.dwg, R038, 9/17/2021 3:11:57 PM

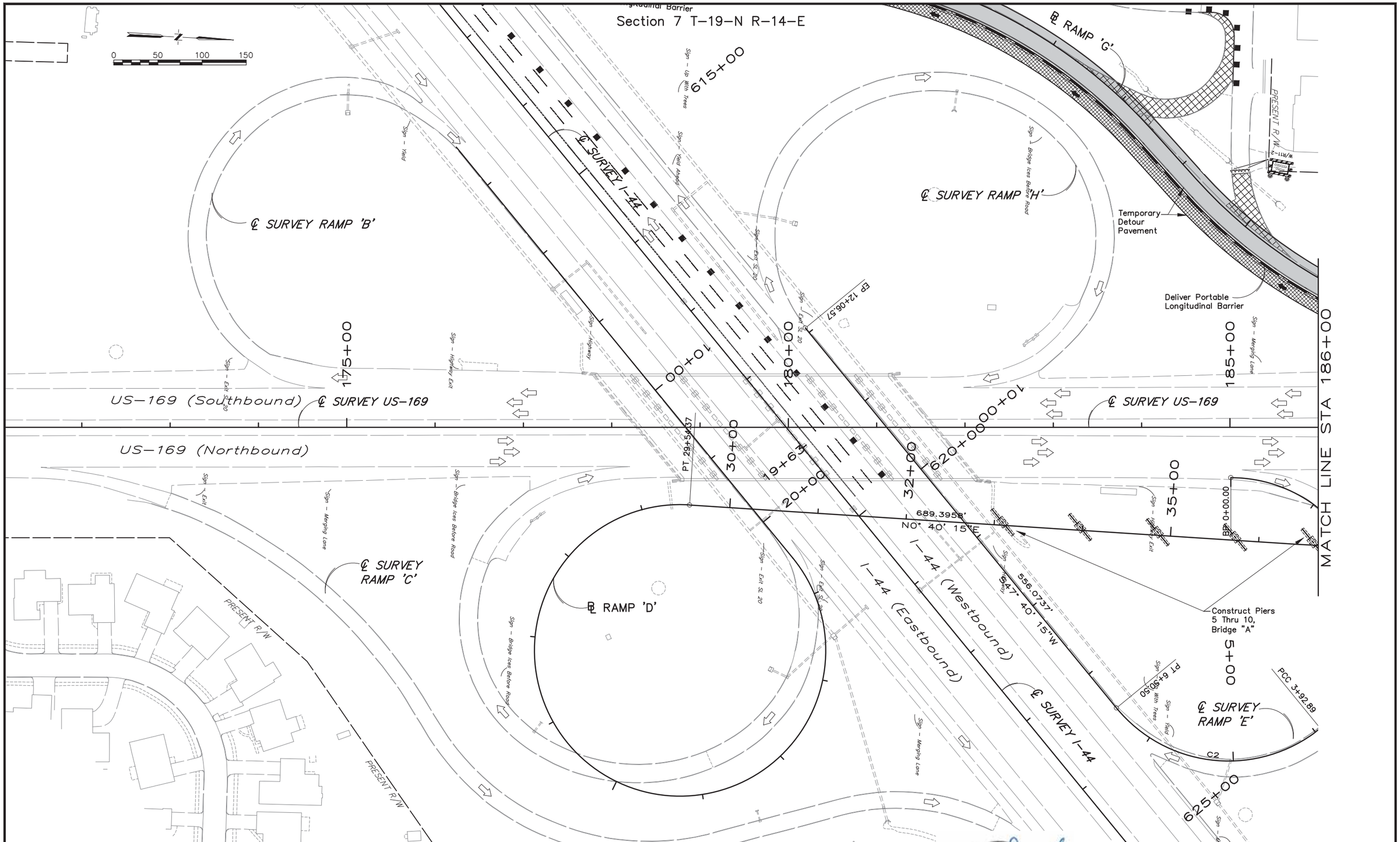

Survey	CKS	
Drawn	CKD	
Checked	CKE	
Approved		
Squad	C & K	

INTERCHANGE (OPERATIONAL IMPROVEMENTS) TULSA COUNTY

PHASE 1 CONSTRUCTION

JOB PIECE NO. 10981(05) SHEET NO. R039

S:\Projects\ODOT\2015 EC-1710 I-44-169 Interchange\ACAD\PS&E\Plans\R038-R040-10981(05)-Phase 1 Construction.dwg, R039, 9/17/2021 3:11:49 PM

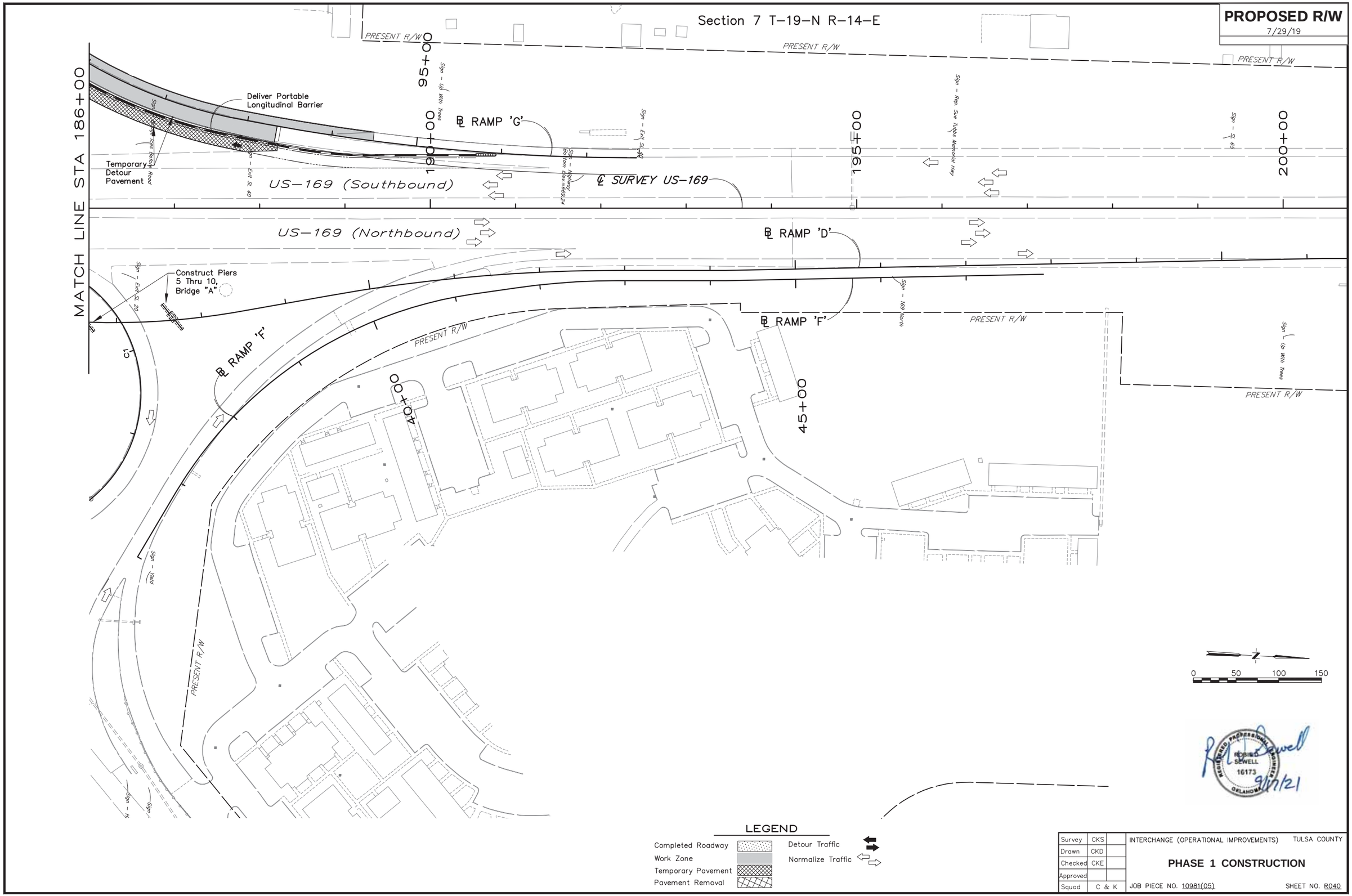

LEGEND

Completed Roadway		Detour Traffic	
Work Zone		Normalize Traffic	
Temporary Pavement			
Pavement Removal			

Survey	CKS	INTERCHANGE (OPERATIONAL IMPROVEMENTS) TULSA COUNTY
Drawn	CKD	PHASE 1 CONSTRUCTION
Checked	CKE	
Approved		
Squad	C & K	JOB PIECE NO. 10981(05) SHEET NO. R040

REGISTERED PROFESSIONAL ENGINEER ROBERT SEWELL 16173 OKLAHOMA
9/17/21

S:\Projects\ODOT\2015 EC-1710 I-44-169 Interchange\ACAD\PS&E\Plans\R038-R040-1098105-Phase 1 Construction.dwg, R040, 9/17/2021 3:11:52 PM

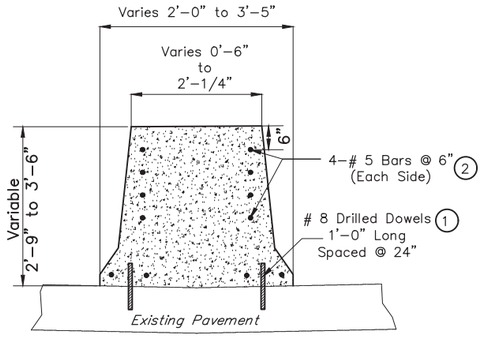

SECTION A

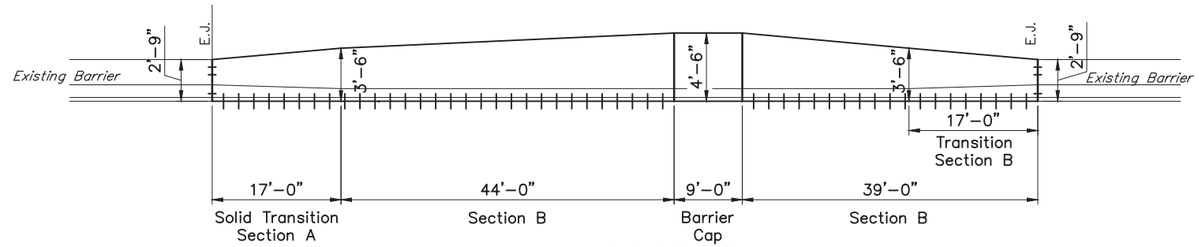

PROFILE

CONCRETE LONGITUDINAL BARRIER ALONG ℄ I-44

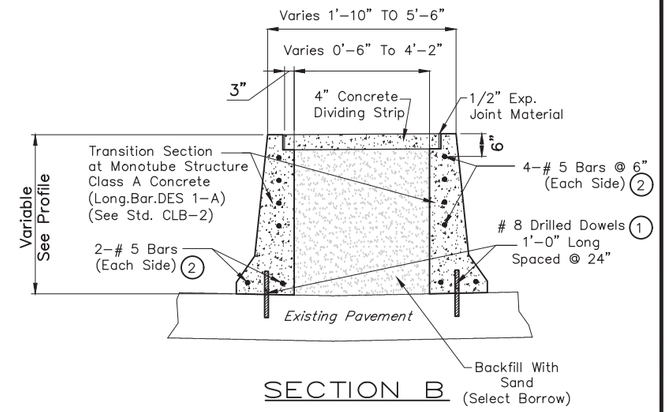

SECTION B

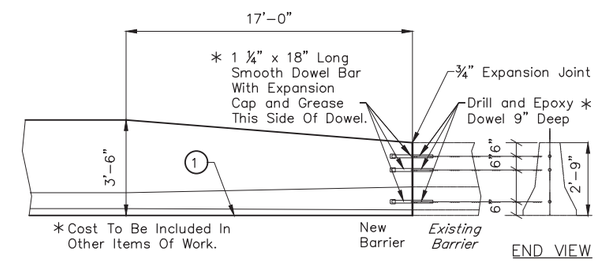

TI-IN PROFILE

FOR ADDITIONAL DETAILS SEE ODOT STD. CLB-2 and PCPR-4

NOTES

1. DOWEL BARS SHALL BE GRADE 60, EPOXY COATED. COST OF DRILLING AND INSTALLING DOWEL BARS SHALL BE INCLUDED IN THE UNIT PRICE BID FOR EPOXY COATED REINFORCING STEEL. INCLUDE DOWEL BARS FOR SOLID TIE-IN SECTION WHEN CAST ON EXISTING OR NEW PAVEMENT.
2. ALL REINFORCING STEEL SHALL BE EPOXY COATED.

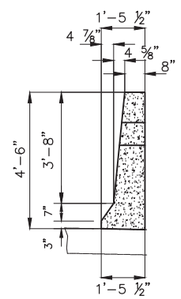

PARAPET

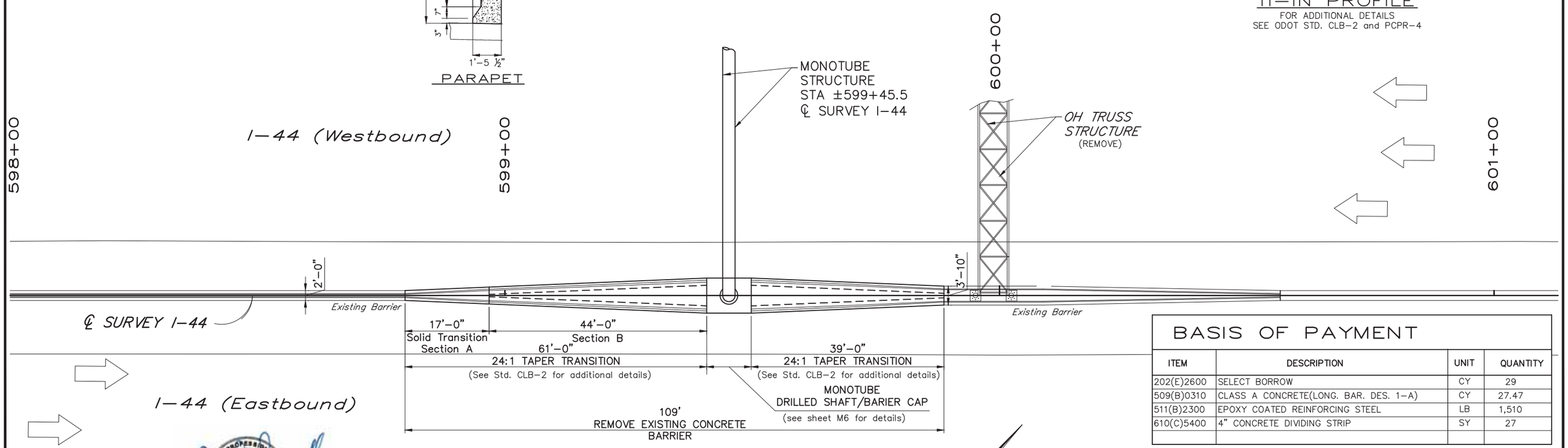

PLAN

CONCRETE LONGITUDINAL BARRIER ALONG ℄ I-44

BASIS OF PAYMENT

ITEM	DESCRIPTION	UNIT	QUANTITY
202(E)2600	SELECT BORROW	CY	29
509(B)0310	CLASS A CONCRETE(LONG. BAR. DES. 1-A)	CY	27.47
511(B)2300	EPOXY COATED REINFORCING STEEL	LB	1,510
610(C)5400	4" CONCRETE DIVIDING STRIP	SY	27

REGISTERED PROFESSIONAL ENGINEER ROBIN D. SEWELL 16173 OKLAHOMA

Robin D. Sewell 9/17/21

Design	CKS	
Drawn	CKD	
Checked	CKE	
Approved		
Squad	C & K	

INTERCHANGE (OPERATIONAL IMPROVEMENTS) TULSA COUNTY

BARRIER WALL DETAILS AT MONOTUBE STRUCTURE

JOB PIECE NO. 10981(05) SHEET NO. R041

S:\Projects\ODOT\2015 EC-1710 I-44-169 Interchange\ACAD\PS&E\Plans\R041-Barrier Wall Details At Monotube Structure.dwg, 11x17 PDF, 9/17/2021 3:12:03 PM

℄ RAMP D
CURVE 1 DATA
PI STA = 19+81.25
N = 421683.0807
E = 2600411.7489
Δ = 313°00'00.00"
T = 71.74'
L = 901.38'
R = 165.00'
E = 344.92'
e = 6.00%
emax = 6.00 %
V = 25 MPH

℄ RETAINING WALL A

NUMBER	LENGTH	BEARING	STATION	NORTHING (Y)	EASTING (X)	RADIUS NORTHING (Y)	RADIUS EASTING (N)
C1	ARC LENGTH = 40.0000 RADIUS = 183.5000 TANGENT = 20.0796 EXTERNAL = 1.0953	DELTA = 12°29'22.36" CHORD LENGTH = 39.9209 CHORD DIRECTION = S52°48'07.44"E	PC 2+60.00 PI 2+80.08 PT 3+00.00	421766.7771 421756.4494 421742.6421	2600670.2784 2600687.4984 2600702.0774	421609.4097	2600575.8976
C2	ARC LENGTH = 250.0000 RADIUS = 183.5000 TANGENT = 148.7536 EXTERNAL = 52.7200	DELTA = 78°03'34.72" CHORD LENGTH = 231.1090 CHORD DIRECTION = S7°31'38.90"E	PC 3+00.00 PI 4+48.75 PT 5+50.00	421742.6421 421640.3548 421513.5248	2600702.0774 2600810.0818 2600732.3531	421609.4097	2600575.8976

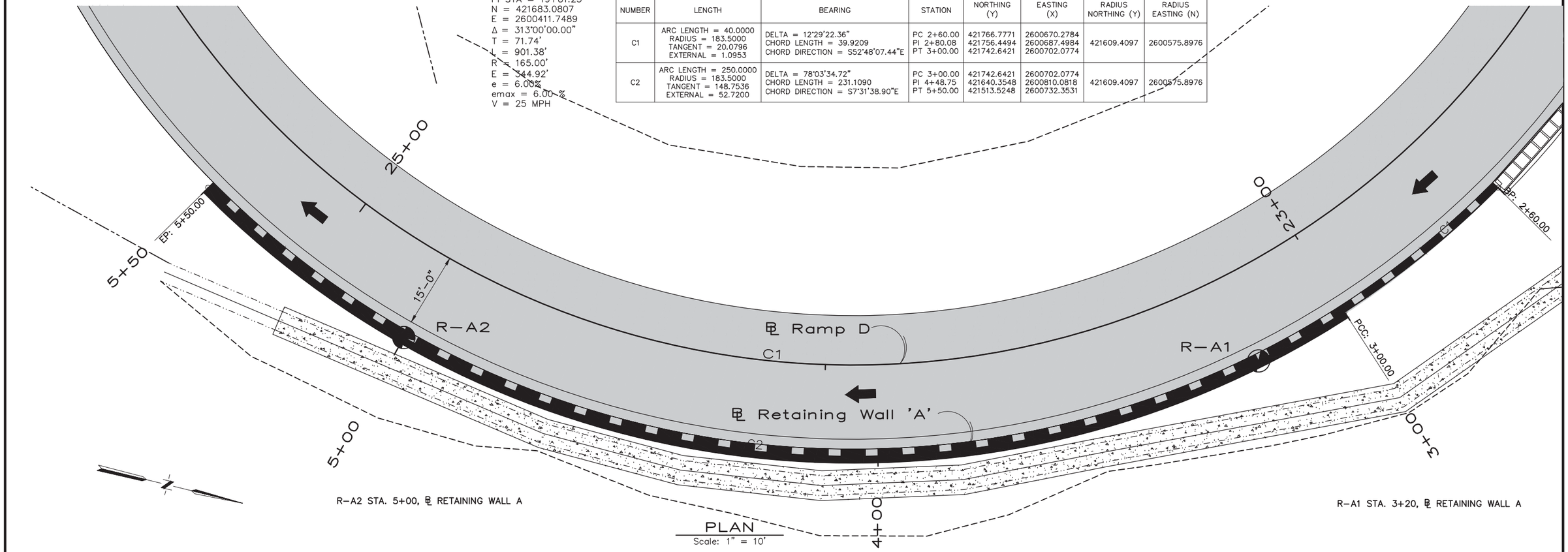

PLAN
Scale: 1" = 10'

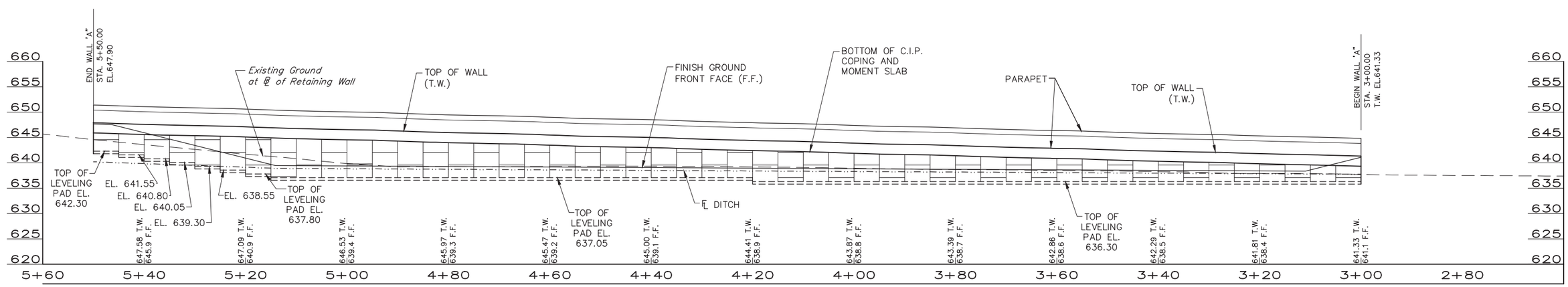

ELEVATION
Scale: 1" = 10'

REGISTERED PROFESSIONAL ENGINEER
ROBERT D. SEWELL
16173
OKLAHOMA
9/17/21

Design	CKS	
Drawn	CKD	
Checked	CKE	
Approved		
Squad	C & K	

INTERCHANGE (OPERATIONAL IMPROVEMENTS) TULSA COUNTY

RETAINING WALL 'A'
PLAN AND ELEVATION

JOB PIECE NO. 10981(05) SHEET NO. RW01

S:\Projects\ODOT\2015 EC-1710 I-44-169 Interchange\ACAD\PS&E\Plans\RW01-10981(05)-Retaining Wall 'A' Plan and Elevation.dwg, RW01, 9/17/2021 3:12:13 PM

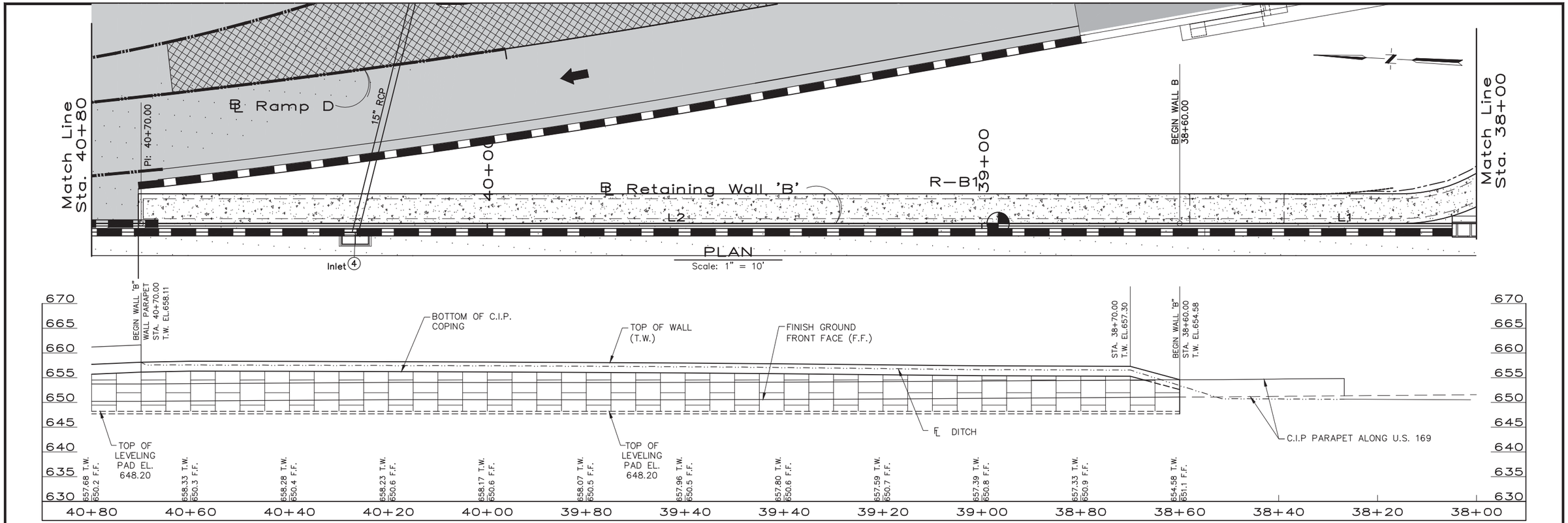

℄ RETAINING WALL B					
NUMBER	LENGTH	BEARING	STATION	NORTHING (Y)	EASTING (X)
L1	60.0000	N3°01'19.55"W	BP 38+00.00 EP 38+60.00	422453.3837 422513.3003	2600337.8683 2600334.7051
L2	210.0000	N3°01'19.55"W	BP 38+60.00 EP 40+70.00	422513.3003 422723.0082	2600334.7051 2600323.6336
L3	150.0000	N3°01'19.55"W	BP 40+70.00 EP 42+20.00	422723.0082 422872.7996	2600323.6336 2600315.7255
L4	80.0000	N3°01'19.55"W	BP 42+20.00 EP 43+00.00	422872.7996 422952.6883	2600315.7255 2600311.5078

REGISTERED PROFESSIONAL ENGINEER ROBERT SEWELL 16173 OKLAHOMA
9/17/21

Design	CKS	
Drawn	CKD	
Checked	CKE	
Approved		
Squad	C & K	

INTERCHANGE (OPERATIONAL IMPROVEMENTS) TULSA COUNTY

RETAINING WALL 'B'
PLAN AND ELEVATION

JOB PIECE NO. 10981(05) SHEET NO. RW02

S:\Projects\ODOT\2015 EC-1710 I-44-169 Interchange\ACAD\PS&E\Plans\RW02-1098105-Retaining Wall 'B' Plan and Elevation.dwg, RW02, 9/17/2021 3:12:18 PM

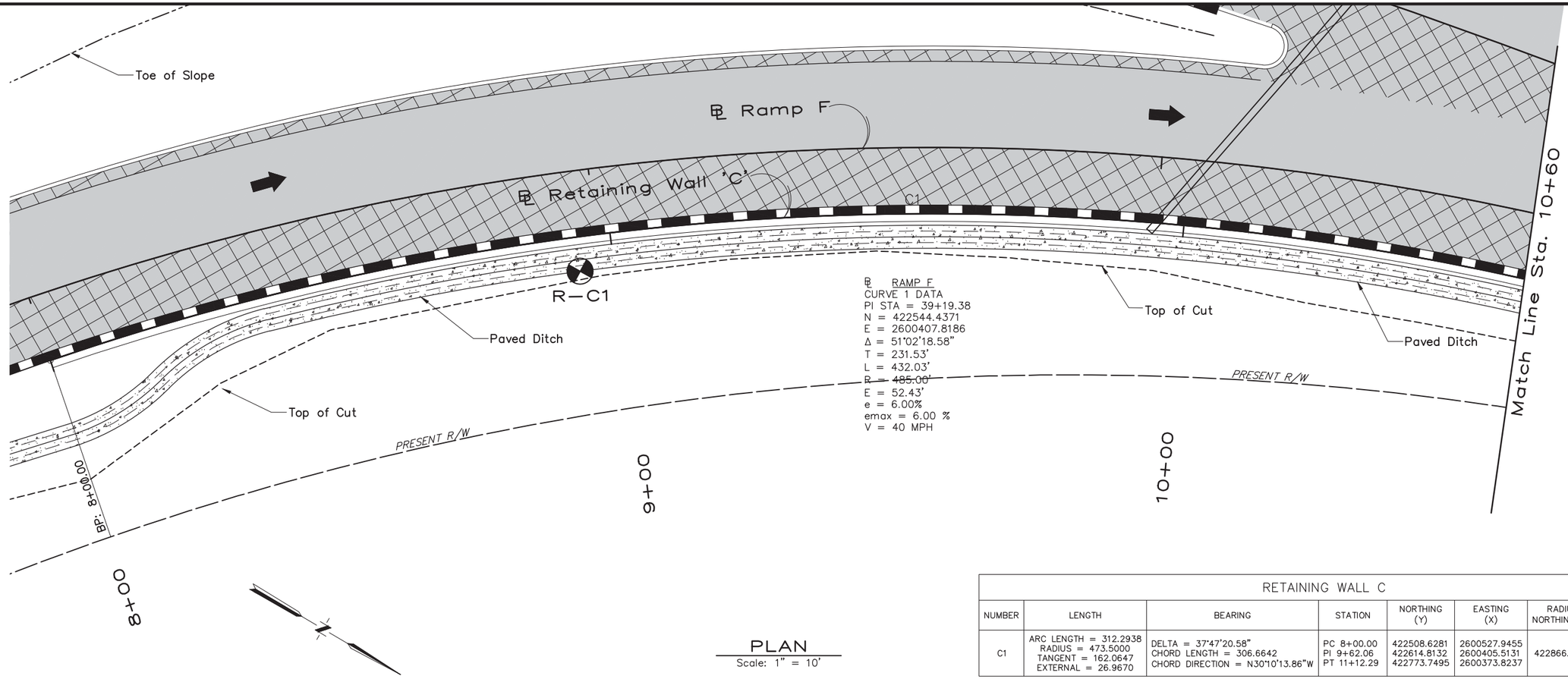

PLAN
Scale: 1" = 10'

RETAINING WALL C							
NUMBER	LENGTH	BEARING	STATION	NORTHING (Y)	EASTING (X)	RADIUS NORTHING (Y)	RADIUS EASTING (N)
C1	ARC LENGTH = 312.2938 RADIUS = 473.5000 TANGENT = 162.0647 EXTERNAL = 26.9670	DELTA = 37°47'20.58" CHORD LENGTH = 306.6642 CHORD DIRECTION = N30°10'13.86"W	PC 8+00.00 PI 9+62.06 PT 11+12.29	422508.6281 422614.8132 422773.7495	2600527.9455 2600405.5131 2600373.8237	422866.3355	2600838.1836

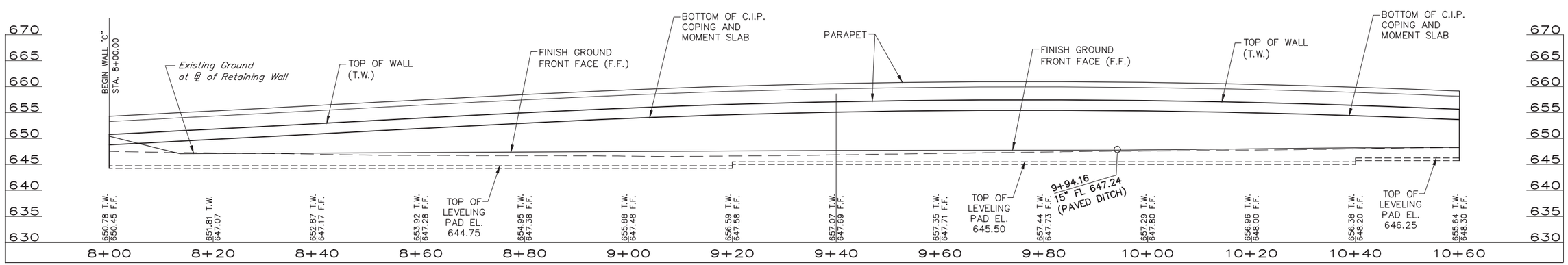

ELEVATION
Scale: 1" = 10'

REGISTERED PROFESSIONAL ENGINEER
ROBIN L. SEWELL
16173
OKLAHOMA
9/17/21

Survey	CKS	
Drawn	CKD	
Checked	CKE	
Approved		
Squad	C & K	

INTERCHANGE (OPERATIONAL IMPROVEMENTS) TULSA COUNTY

RETAINING WALL 'C'
PLAN AND ELEVATION

JOB PIECE NO. 10981(05) SHEET NO. RW03

S:\Projects\ODOT\2015 EC-1710 I-44-169 Interchange\ACAD\PS&E\Plans\RW03-RW05-1098105-Retaining Wall 'C' Plan and Elevation.dwg, RW03, 9/17/2021 3:12:32 PM

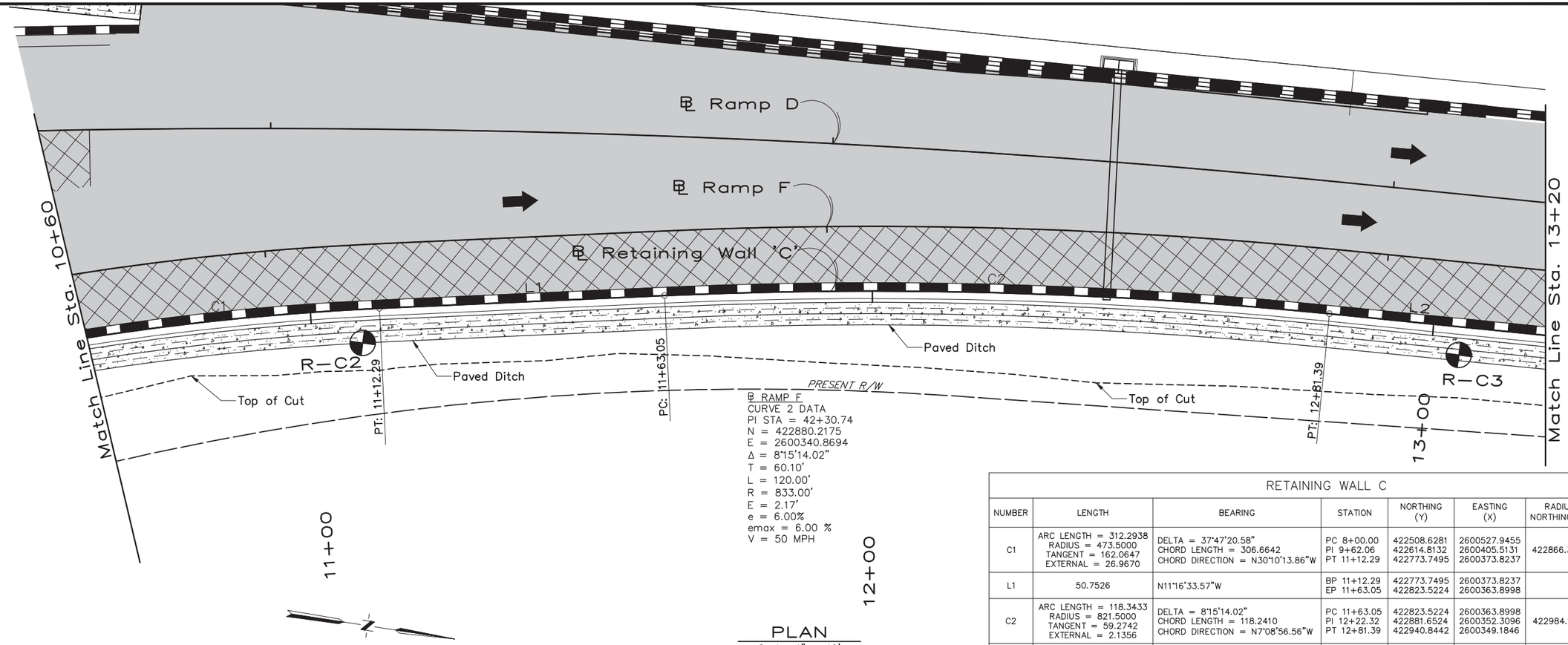

PLAN
Scale: 1" = 10'

RETAINING WALL C							
NUMBER	LENGTH	BEARING	STATION	NORTHING (Y)	EASTING (X)	RADIUS NORTHING (Y)	RADIUS EASTING (N)
C1	ARC LENGTH = 312.2938 RADIUS = 473.5000 TANGENT = 162.0647 EXTERNAL = 26.9670	DELTA = 37°47'20.58" CHORD LENGTH = 306.6642 CHORD DIRECTION = N30°10'13.86"W	PC 8+00.00 PI 9+62.06 PT 11+12.29	422508.6281 422614.8132 422773.7495	2600527.9455 2600405.5131 2600373.8237	422866.3355	2600838.1836
L1	50.7526	N11°16'33.57"W	BP 11+12.29 EP 11+63.05	422773.7495 422823.5224	2600373.8237 2600363.8998		
C2	ARC LENGTH = 118.3433 RADIUS = 821.5000 TANGENT = 59.2742 EXTERNAL = 2.1356	DELTA = 8°15'14.02" CHORD LENGTH = 118.2410 CHORD DIRECTION = N7°08'56.56"W	PC 11+63.05 PI 12+22.32 PT 12+81.39	422823.5224 422881.6524 422940.8442	2600363.8998 2600352.3096 2600349.1846	422984.1546	2601169.5421
L2	127.2489	N3°01'19.55"W	BP 12+81.39 EP 14+08.64	422940.8442 423067.9162	2600349.1846 2600342.4759		

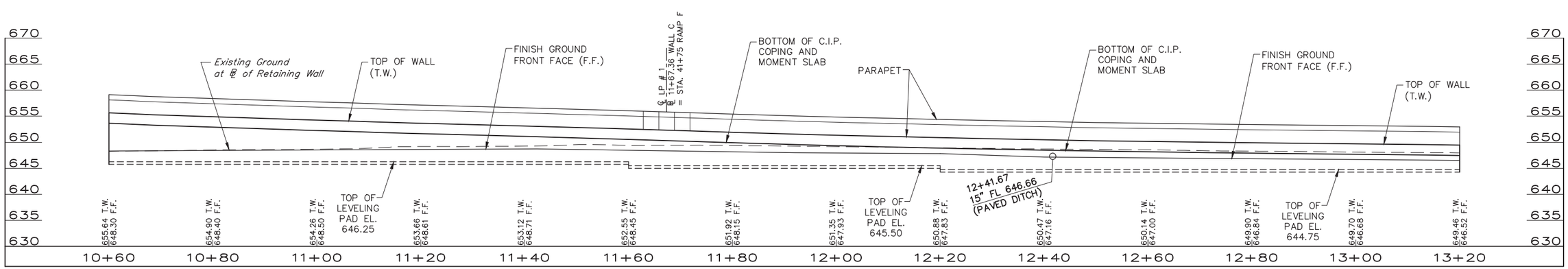

ELEVATION
Scale: 1" = 10'

REGISTERED PROFESSIONAL ENGINEER
RODNEY L. SEWELL
16173
OKLAHOMA
9/17/21

Survey	CKS	
Drawn	CKD	
Checked	CKE	
Approved		
Squad	C & K	

INTERCHANGE (OPERATIONAL IMPROVEMENTS) TULSA COUNTY

RETAINING WALL 'C'
PLAN AND ELEVATION

JOB PIECE NO. 10981(05) SHEET NO. RW04

S:\Projects\ODOT\2015 EC-1710 I-44-169 Interchange\ACAD\PS&E\Plans\RW03-RW05-1098105-Retaining Wall 'C' Plan and Elevation.dwg, RW04, 9/17/2021 3:12:23 PM

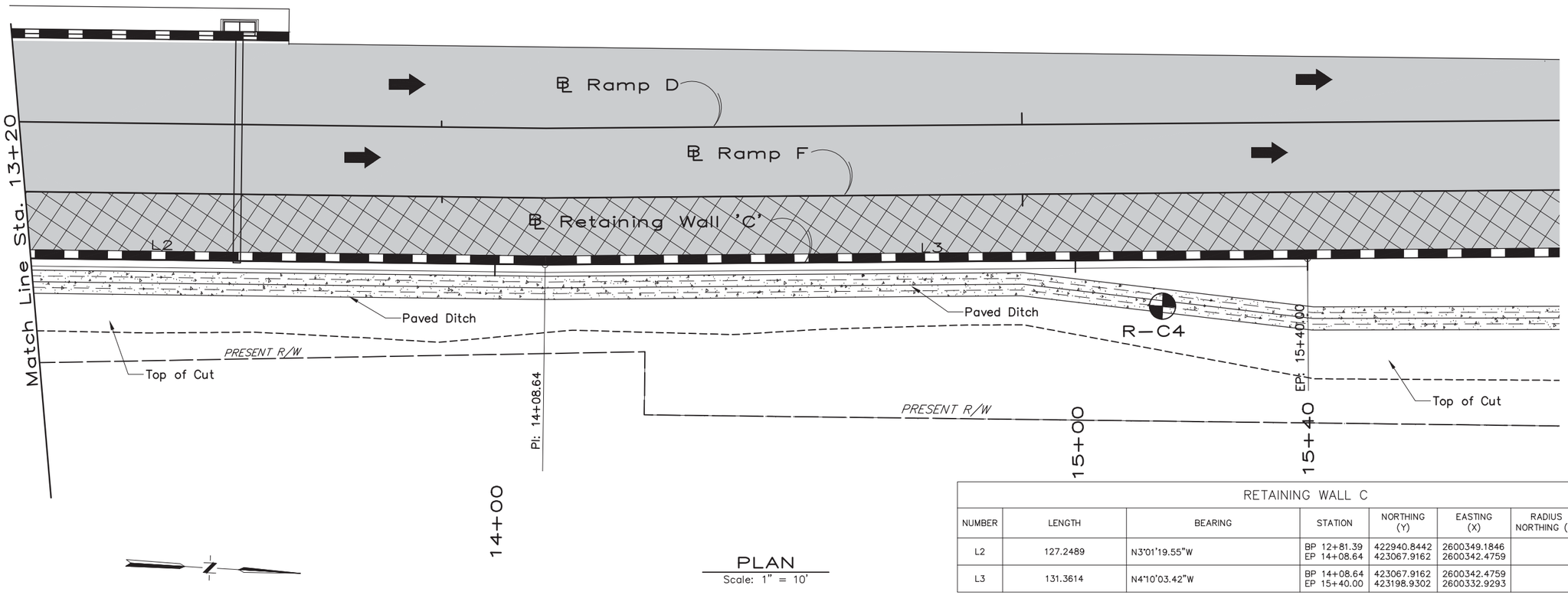

PLAN
Scale: 1" = 10'

RETAINING WALL C							
NUMBER	LENGTH	BEARING	STATION	NORTHING (Y)	EASTING (X)	RADIUS NORTHING (Y)	RADIUS EASTING (N)
L2	127.2489	N3°01'19.55"W	BP 12+81.39 EP 14+08.64	422940.8442 423067.9162	2600349.1846 2600342.4759		
L3	131.3614	N4°10'03.42"W	BP 14+08.64 EP 15+40.00	423067.9162 423198.9302	2600342.4759 2600332.9293		

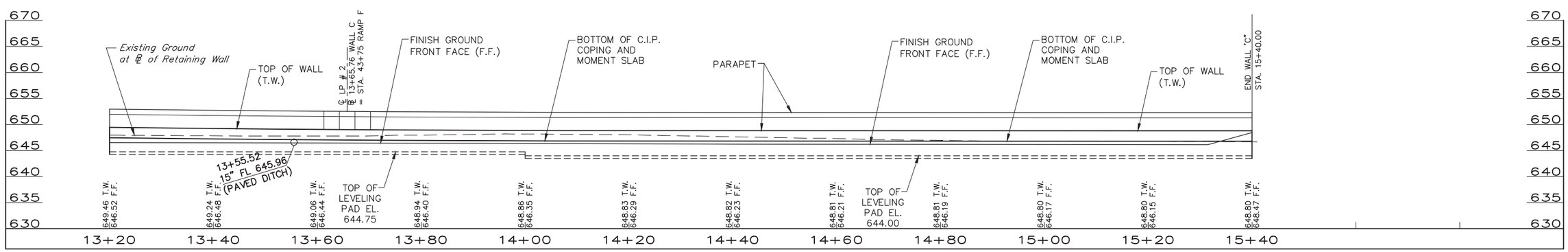

ELEVATION
Scale: 1" = 10'

REGISTERED PROFESSIONAL ENGINEER
ROBIN L. SEWELL
16173
OKLAHOMA
9/17/21

Survey	CKS	
Drawn	CKD	
Checked	CKE	
Approved		
Squad	C & K	

INTERCHANGE (OPERATIONAL IMPROVEMENTS) TULSA COUNTY

RETAINING WALL 'C'
PLAN AND ELEVATION

JOB PIECE NO. 10981(05) SHEET NO. RW05

S:\Projects\ODOT\2015 EC-1710 I-44-169 Interchange\ACAD\PS&E\Plans\RW03-RW05-1098105-Retaining Wall 'C' Plan and Elevation.dwg, RW05, 9/17/2021 3:12:27 PM

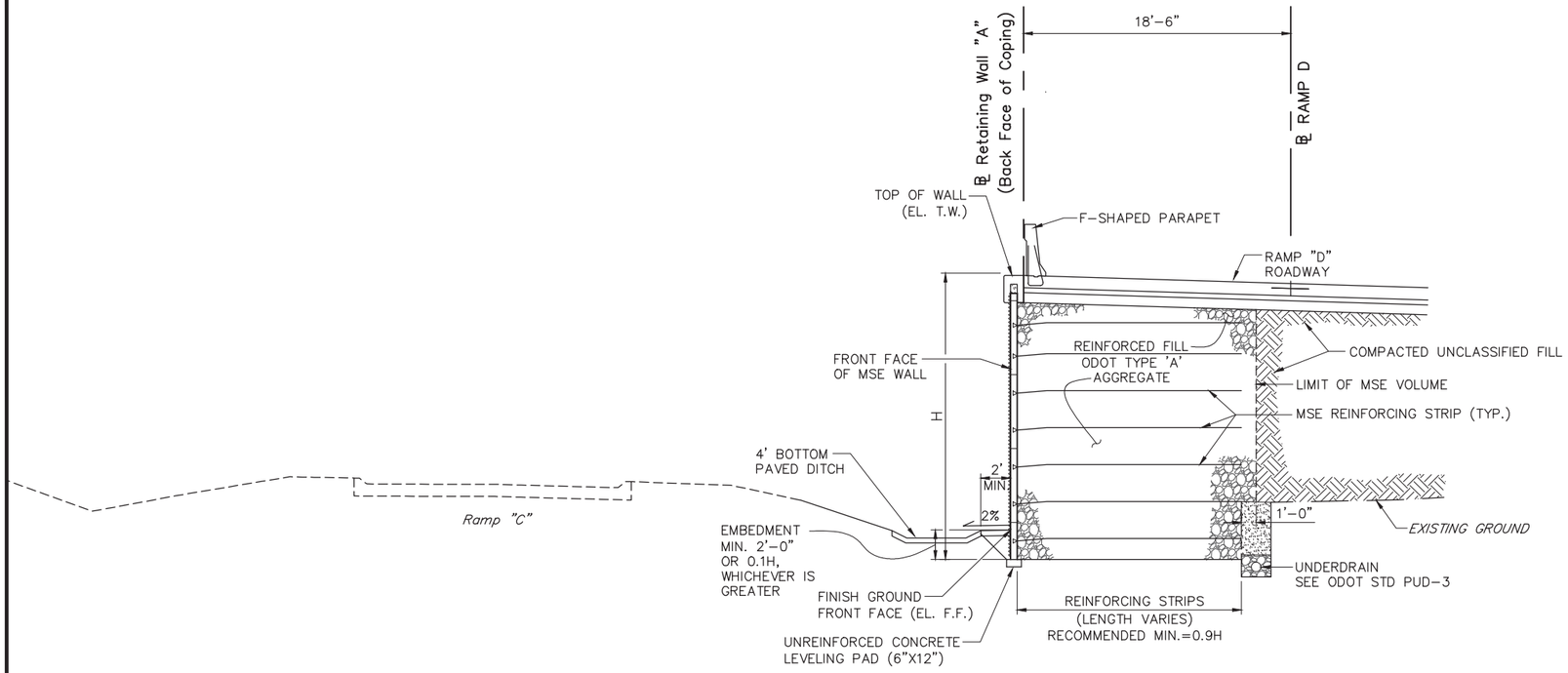

TYPICAL MSE RETAINING WALL SECTION WALL "A"

STA 3+00.00 TO STA 5+50.00, ℄ RETAINING WALL "A"

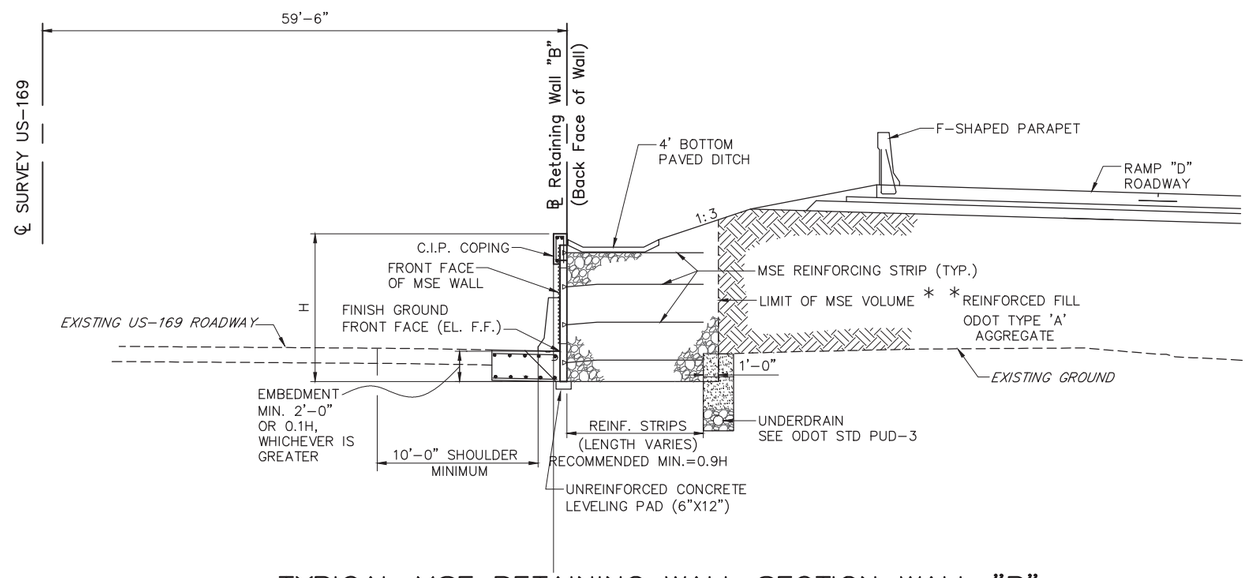

TYPICAL MSE RETAINING WALL SECTION WALL "B"

STA. 38+60.00 TO STA. 40+70.00, ℄ RETAINING WALL "B"

Survey	CKS	
Drawn	CKD	
Checked	CKE	
Approved		
Squad	C & K	

INTERCHANGE (OPERATIONAL IMPROVEMENTS) TULSA COUNTY

MSE RETAINING WALL SECTIONS

JOB PIECE NO. 10981(05) SHEET NO. RW06

S:\Projects\ODOT\2015 EC-1710 I-44-169 Interchange\ACAD\PS&E\Plans\RW06-RW07-1098105- MSE Retaining Wall Sections.dwg, RW06, 9/17/2021 3:12:42 PM

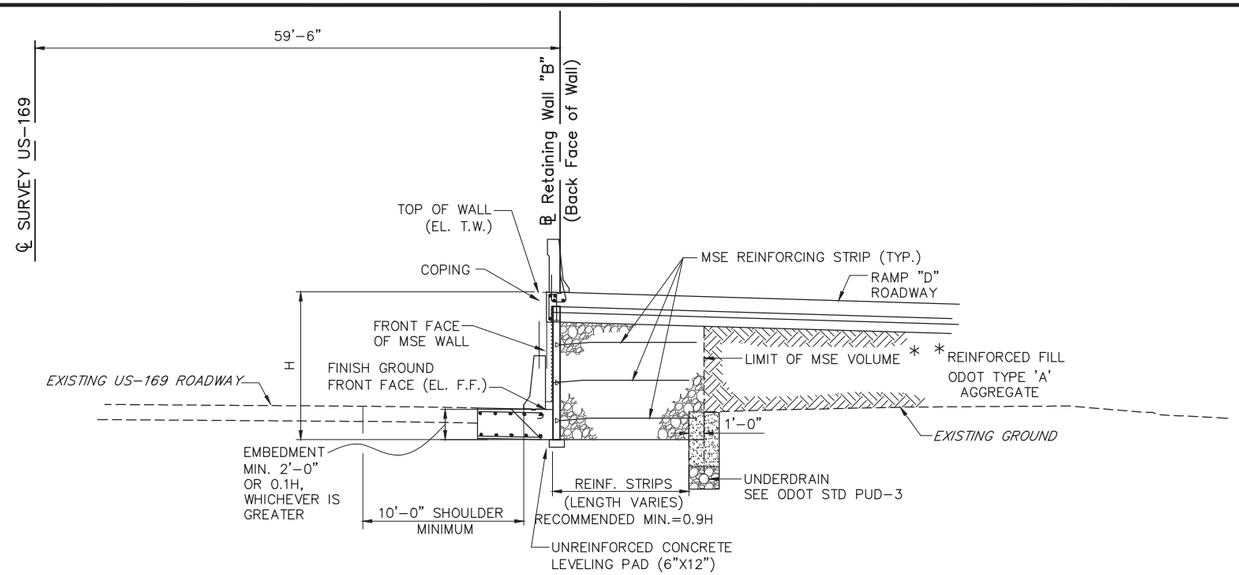

TYPICAL MSE RETAINING WALL SECTION WALL "B"

STA. 40+70.00 TO STA. 42+20.00, ℄ RETAINING WALL "B"

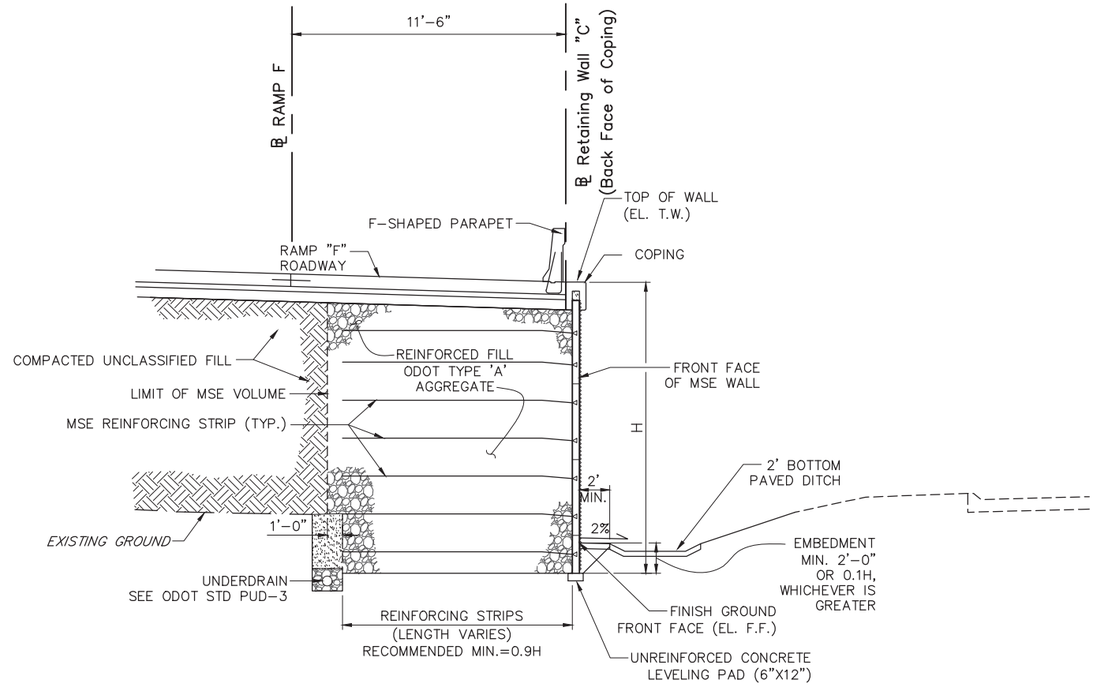

TYPICAL MSE RETAINING WALL SECTION WALL "C"

STA. 8+00.00 TO STA. 15+40.00, ℄ RETAINING WALL "C"

REGISTERED PROFESSIONAL ENGINEER
RODNEY L. SEWELL
16173
OKLAHOMA
9/17/21

Survey	CKS		INTERCHANGE (OPERATIONAL IMPROVEMENTS) TULSA COUNTY
Drawn	CKD		**MSE RETAINING WALL SECTIONS**
Checked	CKE		
Approved			
Squad	C & K		JOB PIECE NO. 10981(05) SHEET NO. RW07

S:\Projects\ODOT\2015 EC-1710 I-44-169 Interchange\ACAD\PS&E\Plans\RW06-RW07-1098105- MSE Retaining Wall Sections.dwg, RW07, 9/17/2021 3:12:38 PM

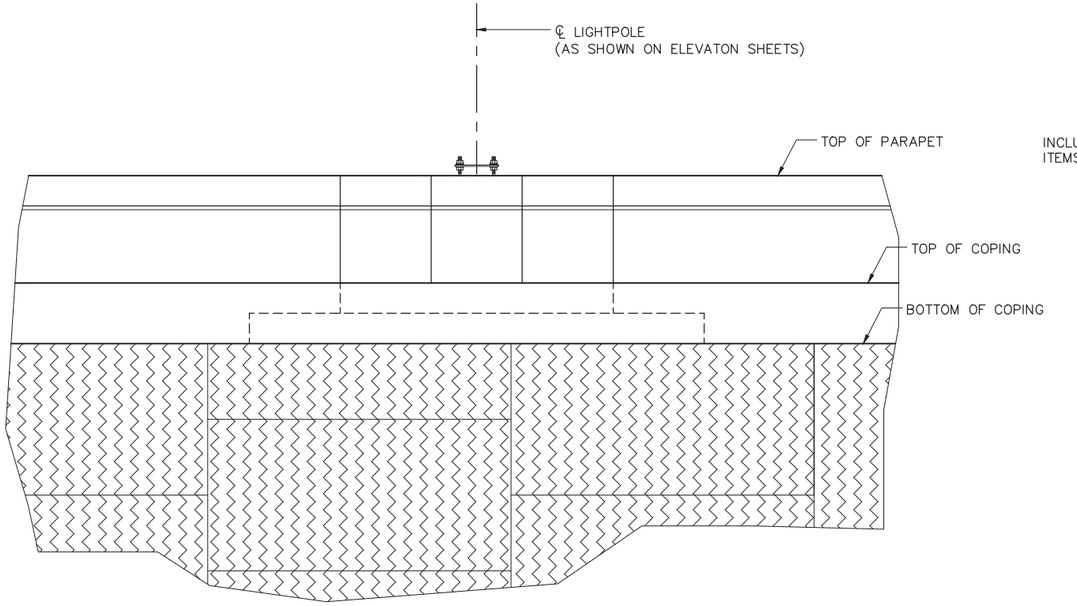

ELEVATION AT LIGHT POLE LOCATION

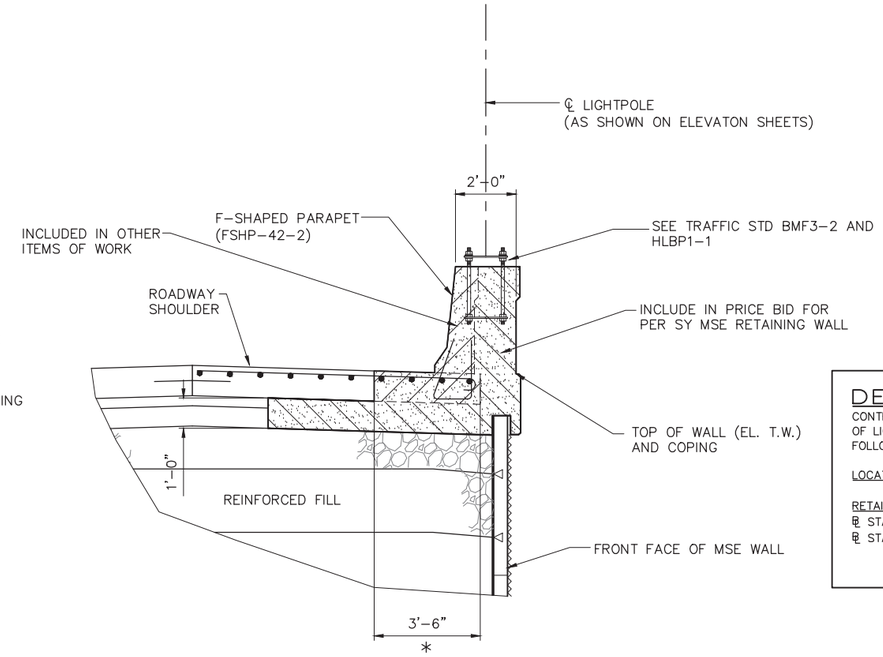

SECTION A–A

DESIGN NOTES:

CONTRACTOR SHALL BE RESPONSIBLE FOR DESIGN OF LIGHT POLE FOUNDATION FOR THE FOLLOWING ASSOCIATED LIGHT POLES:

LOCATION	POLE NO.
RETAINING WALL "C"	
℄ STA. 11+67.36	1
℄ STA. 13+65.76	2

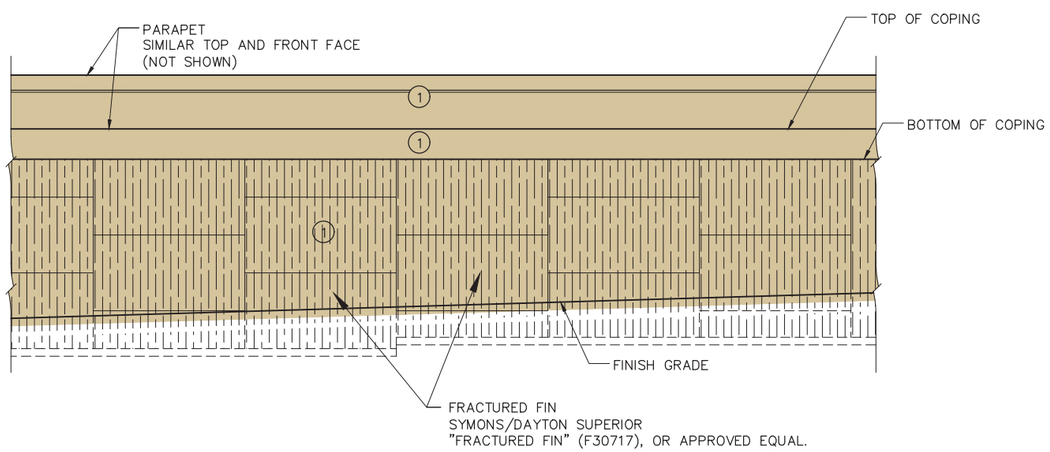

ELEVATION – WALL SURFACE, COPING AND PARAPET FINISHING

(1) FEDERAL COLOR STANDARD NUMBER 33564

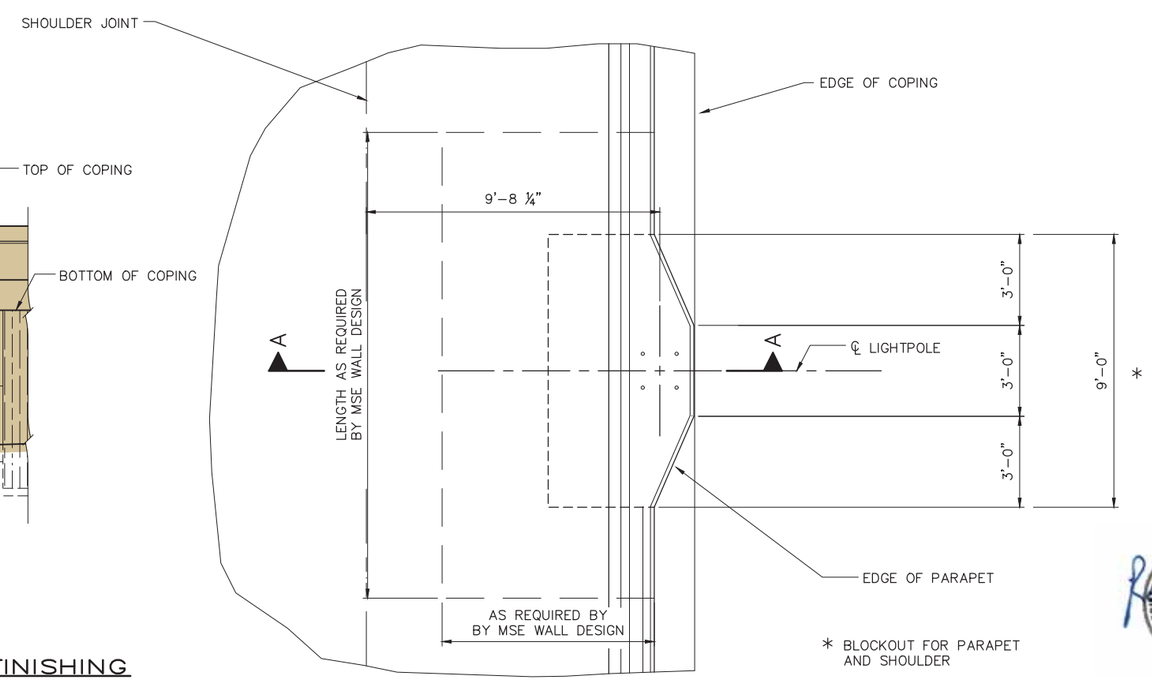

* BLOCKOUT FOR PARAPET AND SHOULDER

PLAN AT LIGHT POLE LOCATION

WALL "C"

REGISTERED PROFESSIONAL ENGINEER
ROBERT D. SEWELL
16173
OKLAHOMA
9/17/21

Survey	CKS	
Drawn	CKD	
Checked	CKE	
Approved		
Squad	C & K	

INTERCHANGE (OPERATIONAL IMPROVEMENTS) TULSA COUNTY

MSE RETAINING WALL DETAILS

JOB PIECE NO. 10981(05) SHEET NO. RW08

S:\Projects\ODOT\2015 EC-1710 I-44-169 Interchange\ACAD\PS&E\Plans\RW08-10981(05)-MSE Retaining Wall Details.dwg, RW09, 9/17/2021 3:12:48 PM

DESIGN PARAMETERS:

DESIGN OF THE RETAINING WALLS SHALL BE BASED ON THE DESIGN PARAMETERS IN THE GEOTECHNICAL REPORT

CONTRACTOR SHALL BE RESPONSIBLE FOR DESIGN OF THE MSE WALLS FOR:

1. GLOBAL STABILITY: SLIDING , OVERTURNING, BEARING CAPACITY, AND ECCENTRICITY.
2. INTERNAL STABILITY INCLUDING: TENSILE STRESSES, PULLOUT, FACING CONNECTION, AND SLIDING ALONG REINFORCEMENT.
3. LOCAL STABILITY INCLUDING: BULGING AND MAXIMUM UNREINFORCED HEIGHT.
4. DESIGN THE MSE WALL TO ACCOUNT FOR DEAD AND LIVE LOADS, SEISMIC LOADS, HORIZONTAL LOADS FROM GUARDRAILS OR BARRIERS, HYDROSTATIC LOADS, AND OTHER LOADS AS APPROPRIATE.
5. DESIGN THE MSE WALL SUCH THAT THE TOE IS AT A DEPTH THAT NO SCOURING OR UNDERMINING WILL OCCUR.

CORROSION CRITERIA:

THE EARTH REINFORCEMENT ELEMENTS SHALL BE DESIGNED TO HAVE A CORROSION RESISTANCE–DURABILITY TO INSURE A MINIMUM DESIGN LIFE OF 100 YEARS. MAXIMUM LOSS PER SIDE DUE TO CORROSION SHALL BE COMPUTED BY ASSUMING A UNIFORM LOSS MODEL BASED ON THE FOLLOWING:

ZINC CORROSION RATE (FIRST TWO YEARS)	0.58 MIL./YR
ZINC CORROSION RATE (SUBSEQUENT YEARS)	0.16 MIL./YR
CARBON STEEL CORROSION RATE	0.47 MIL./YR

ALL STRESS AND PULLOUT CALCULATIONS SHALL BE DONE ON THE CALCULATED EARTH REINFORCEMENT SECTION REMAING FOR 100 YEARS.

GENERAL NOTES:

MATERIALS AND METHODS USED IN CONSTRUCTION OF RETAINING WALLS SHALL BE IN ACCORDANCE WITH ODOT STANDARD SPECIFICATIONS FOR HIGHWAY CONSTRUCTION, CURRENT EDITION, UNLESS OTHERWISE NOTED, FOR THE REINFORCED ZONE, BACKFILL MATERIAL SHALL MEET THE REQUIREMENTS OF STANDARD SPECIFICATIONS SECTION 510.02.

SECTION AND ELEVATION IS SHOWN FOR INFORMATIONAL PURPOSES ONLY. SPECIFIC GEOMETRY IS TO BE DETERMINED BASED ON WALL LAYOUTS AND OTHER PLAN INFORMATION.

THE REINFORCED ZONE MATERIAL SHALL EXTEND HORIZONTALLY FROM THE BACK OF THE PANELS TO THE END OF THE EARTH REINFORCEMENTS.

THE REINFORCEMENT ZONE MATERIAL SHALL EXTEND VERTICALLY FROM THE TOP OF PANEL TO TOP OD LEVELING PAD.

THE UPPERMOST EARTH REINFORCEMENTS SHALL BE PROVIDED FROM THE TOP OF THE LEVELING PAD TO FINISHED GRADE, SEE PROFILE AND WALL SECTIONS FOR LOCATIONS.

THE LOWEST LEVEL OF EARTH REINFORCEMENTS, SHALL BE NO MORE THAN 2 FEET ABOVE THE TOP OF LEVELING PAD.

STANDARDIZING FACING PANELS SHALL HAVE AT LEAST TWO LEVELS OF EARTH REINFORCEMENT TO STABILIZE PANEL AGAINST ROTATION.

MINIMUM WIRE SIZE FOR EARTH REINFORCEMENTS SHALL BE W7.0. IF DIFFERENT LONGITUDINAL AND CROSS WIRES ARE USED IN AN EARTH REINFORCEMENT MESH, THE SMALLER WIRE SHALL HAVE AT LEAST 50% OF THE CROSS SECTION AREA OF THE LARGER WIRE. MINIMUM PANEL THICKNESS SHALL BE 5 INCHES.

THE JOINT CONFIGURATION SHALL BE SUCH THAT THE FILTER FABRIC OR PAD MATERIALS ARE NOT EXPOSED AT THE WALL FACE. A ONE–PIECE CORNER PANEL SHALL BE PROVIDED FOR ALL ANGLE CHANGES OF GREATER THAN 30 DEGREES OR LESS.

A SLIP JOINT COVER SHALL BE PROVIDED AS A TRANSITION BETWEEN THE CAST–IN–PLACE WALLS AND AT THE BRIDGE ABUTMENTS. THE COST OF THE SLIP JOINT COVER SHALL BE INCLUDED IN THE SQUARE YARD COST OF THE MSE RETAINING WALLS.

CONCRETE COPING SHALL BE PROVIDED ALONG THE TOP OF WALL AND AT VERTICAL STEPS ALONG TOP OF WALL. THE JOINTS BETWEEN ALL COPING SEGMENTS SHALL BE SEALED TO PREVENT INFILTRATION OF WATER INTO THE RETAINING WALL BACKFILL USING SILICONE JOINT SEALER PER ODOT STANDARD LECS–4. WHEN COPING IS CAST–IN–PLACE COPING JOINTS SHALL BE PLACED TO COINCIDE WITH PRECAST PANEL JOINTS, THE WALL FACE PANELS SHALL EXTEND UP INTO THE COPING A MINIMUM OF 2 INCHES.

IF COPING IS PRECAST, A SMOOTH LEVEL–UP STRIP SHALL BE PROVIDED ON TOP OF PRECAST PANELS PRIOR TO INSTALLATION OF THE COPING. SHIMS MAY BE USED ON TOP OF THE LEVEL–UP STRIP TO FACILITATE ALIGNMENT.

SEE STANDARD SPECIFICATIONS 105.02 FOR REQUIREMENTS FOR SHOP DRAWINGS.

DESIGN NOTES:

MECHANICALLY STABILIZED EARTH (MSE) WALLS SHALL BE THE RESPONSIBILITY OF THE CONTRACTOR AND SHALL BE DESIGNED BY A REGISTERED PROFESSIONAL ENGINEER IN THE STATE OF OKLAHOMA IN ACCORDANCE WITH THE FIFTH EDITION, 2010 AASHTO LFRD DESIGN SPECIFICATIONS AND CURRENT INTERIMS. DESIGN CALCULATIONS AND DRAWINGS SHALL BE SUBMITTED TO ODOT BRIDGE DIVISION FOR APPROVAL PRIOR TO CONSTRUCTION.

REINFORCING STRAPS SHALL HAVE A MINIMUM LENGTH OF 8.5 FEET OR AT LEAST 96% OF THE WALL HEIGHT (EXPOSED HEIGHT PLUS EMBEDMENT) FOR FOUNDATIONS BEARING IN THE SOIL AND 85% OF THE WALL HEIGHT FOR FOUNDATIONS BEARING IN SHALE WHICHEVER IS GREATER. BEARING CAPACITY ANALYSES SHALL CONSIDER GROUNDWATER LEVELS AT THE BASE OF THE WALL AND SHALL BE BASED ON THE BUOYANT UNIT WEIGHT OF THE FOUNDATION MATERIAL.

THERE SHALL BE NO SURCHARGE WITHIN 25 FEET OF THE CREST OF THE TEMPORARY EXCAVATION SLOPE DURING CONSTRUCTION OF RETAINING WALL.

IF THE OKLAHOMA DEPARTMENT OF TRANSPORTATION (ODOT) TYPE "A" AGGREGATE BASE MATERIAL IS UISED TO CONSTRUCT THE REINFORCED ZONE, A BACKSLOPE DRAIN, COMPRISED OF A GEOCOMPOSITE DRAINAGE BLANKET, SUCH AS MIRADRAIN 6200X, OR APPROVED EQUAL, SHALL BE ATTACHED TO THE FACE OF CUT BACKSLOPE AND EXTEND DOWN TO A COLLECTOR PIPE PLACED ALONG THE BOTTOM OF THE REINFORCED ZONE AT BASE OF THE CUT SLOPE. THE COLLECTOR DRAIN SHOULD CONSIST OF PERFORATED PIPE THAT IS PLACED IN THE FREE DRAINING AGGREGATE, SUCH AS ASTM C–33 #57 STONE, WITH THE STONE WRAPPED IN GEOTEXTILE FILTER FABRIC. THE COLLECTOR DRAIN SHOULD BE SLOPED TO DRAIN OUT BEYOND ONE OR BOTH ENDS OD THE RETAINING WALL. THE GEOCOMPOSITE DRAINAGE BLANKED SHOULD BE CUT OFF AT THE DEPTH OF 2 FEET BELOW THE FINISHED GROUND SURFACE AT THE BACK OF THE SOIL OVER THE DRAIN TO PREVENT THE INFILTRATION OF WATER INTO THE BACKSLOPE DRAIN.

CONVENTIONAL DEWATERING METHODS SHOULD BE ADEQUATE FOR TEMPORARY REMOVAL OF ANY GROUNDWATER ENCOUNTERED DURING THE SHALLOW EXCAVATION PROCESS. MORE EXTENSIVE DEWATERING MAY BE REQUIRED FOR EXCAVATIONS TO REMOVE SOFT SOILS AND/OR IF CONSTRUCTION OCCURS DURING THE WET PERIODS OF THE YEAR.

ANY OVER EXCAVATIONS FOR COMPACTED BACKFILL PLACEMENT BELOW THE RETAINING WALL SHOULD EXTEND LATERALLY A MINIMUM OF 5 FEET BEYOND THE FRONT OF THE RETAINING WALL TOE TO A MINIMUM DISTANCE BEHIND THE WALL EQUAL TO THE FOUNDATION BASE ELEVATION WITH APPROVED ODOT TYPE "A" AGGREGATE BASE PLACED IN LIFTS OF 9 INCHES OR LESS IN LOOSE THICKNESS AND COMPACTED TO AT LEAST 98% OF THE MATERIAL'S MAXIMUM STANDARD PROCTOR DRY DENSITY (AASHTO T–99) AT A MOISTURE CONTENT BETWEEN 2% BELOW TO 2% ABOVE THE MATERIAL'S OPTIMUM MOISTURE CONTENT.

IN ALL AREAS, THE CONTRACTOR SHALL BE RESPONSIBLE FOR GEOTECHNICAL TESTING AND GLOBAL STABILITY ANALYSIS OF THE WALL SYSTEM, GEOTECHNICAL TESTING SHALL BE IN ACCORDANCE WITH THE 2005 STATE OF OKLAHOMA DEPARTMENT OF TRANSPORTATION SPECIFICATIONS FOR GEOTECHNICAL INVESTIGATION OF BRIDGES AND RELATED STRUCTURES. MATERIALS, LABOR, CONSTRUCTION, GEOTECHNICAL TESTING AND GLOBAL STABILITY ANALYSIS, AND ANY ITEMS FOR MSE WALLS SHALL BE INCLUDED IN THIS PAY ITEM. SEE SECTION 510.04(E)2 OF THE 2009 STANDARD SPECIFICATIONS FOR FURTHER INFORMATION.

SURFACE PREPARATION AND FINISHING

COLOR STAIN SYSTEM APPLICATION INSTALLERS:

THE MANUFACTURER OR MANUFACTURER'S AUTHORIZED REPRESENTATIVE SHALL HAVE A MINIMUM OF FIVE YEARS EXPERIENCE OF APPLICATION OF CONCRETE STAIN. THE CONTRACTOR SHALL SUBMIT THE RESUME OF THE QUALIFIED INSTALLER TO THE ENGINEER FOR WRITTEN APPROVAL.

SPECIAL SURFACE PREPARATION:

WORK UNDER THIS SECTION SHALL INCLUDE SURFACE CLEANING PREPARATION TO ASSURE THE SURFACE IS FREE OF ALL LATENCY, DIRT, DUST, GREASE, EFFLORESCENCE, POINT, AND ANY FOREIGN MATERIAL PRIOR TO THE STAIN APPLICATION, IN ACCORDANCE WITH THE MANUFACTURER'S RECOMMENDATIONS. THE CONTRACTOR SHALL CORRECT, AT HIS OWN COST, ANY SURFACE PROBLEMS CREATED AS A DIRECT RESULT OF THE SURFACE PREPARATION METHODS USED.

PENETRATING STAIN STANDARDS:

PENETRATING STAIN SHALI BE ANCHOR PAINT WATERBORNE ACRYLIC CONCRETE STAIN, KWAL PAINT STONE FX ACRYLIC/POLYSILOXONE SKIN OR APPROVED EQUAL.

STAIN ALL EXPOSED CONCRETE SURFACES OF PARAPET, COPING, AND WALLS IN FEDERAL STANDARD COLOR NO. 33564.

INCLUDE ALL COST OF CONCRETE STAIN, LABOR, MATERIALS, TOOLS AND INCIDENTALS NECESSARY TO COMPLETE THE WORK IN THE PRICE BID PER S.Y. OF "MSE RETAINING WALL".

GEOTECHNICAL REPORTS:

THE FOLLOWING GEOTECHNICAL REPORTS HAVE BEEN PREPARED BY KLEINFELDER PROJECT NO. 20172364–4 AND PROJECT NO. 20172364–8 FOR THIS PROJECT.

PROJECT NO.	DATE	DESCRIPTION
20172364–4	FEBRUARY 13, 2019	MSE RETAINING WALLS
20172364–8	AUGUST 1, 2019	MSE RETAINING WALLS

THE GEOTECHNICAL REPORTS ARE AVAILABLE FOR REVIEW AT THE OFFICE ENGINEER DIVISION, ODOT, 200 N.E. 21ST STREET OKLAHOMA CITY, OK 73105. ANY INFORMATION CONTAINED IN THE GEOTECHNICAL REPORT SHOULD NOT BE CONSIDERED AS REPRESENTATIVE OF ALL FIELD CONDITIONS.

PAYMENT:

THE PAYMENT FOR MSE RETAINING WALL SHALL BE BASED ON THE SURFACE AREA SHOWN IN THE GENERAL PLAN AND ELEVATION SHEETS FROM THE TOP OF THE RETAINING WALL TO TOP OF THE LEVELING PAD. NO ADDITIONAL PAYMENT WILL BE ALLOWED FOR VARYING OF THE LEVELING PAD. ELEVATION SHOWN IN THE GP&E IS FOR INFORMATIONAL PURPOSES ONLY. ACTUAL LEVELING PAD ELEVATION SHALL BE DETERMINED BY THE CONTRACTOR TO PROVIDE SUPPORT FOR THE PROPOSED WALL SYSTEM AND SUBMITTED TO THE ENGINEER FOR APPROVAL.

INCLUDE ALL COST FOR EXCAVATION, OVER EXCAVATION, BACKFILL, BACKFILL WITHIN THE REINFORCED ZONE, MATERIALS, DRAINAGE SYSTEM, GEOTEXTILES, PERFORATED AND NON–PERFORATED PIPE, CONCRETE, REINFORCING, COPING, ASSOCIATED LIGHT POLE FOOTINGS, EARTH REINFORCEMENT, CONCRETE PANELS, LEVELING PAD, SURFACE FINISHING, AND ENGINEERING IN THE PRICE BID PER S.Y. OF "MSE RETAINING WALL".

MSE RETAINING WALL QUANTITIES

DESCRIPTION	UNIT	WALL A	WALL B	WALL C	TOTAL
MSE RETAINING WALL	SY	207	342	598	1,147
GRAFFITI TREATMENT	SF	1,870	3,080	5,390	10,340

REGISTERED PROFESSIONAL ENGINEER ROBERT L. SEWELL 16173 OKLAHOMA
9/17/21

Survey	CKS	
Drawn	CKD	
Checked	CKE	
Approved		
Squad	C & K	

INTERCHANGE (OPERATIONAL IMPROVEMENTS) TULSA COUNTY

MSE RETAINING WALL NOTES

JOB PIECE NO. 10981(05) SHEET NO. RW09

S:\Projects\ODOT\2015 EC-1710 I-44-169 Interchange\ACAD\PS&E\Plans\RW09-1098105-MSE Retaining Wall Notes.dwg, 11x17, 9/17/2021 3:12:53 PM

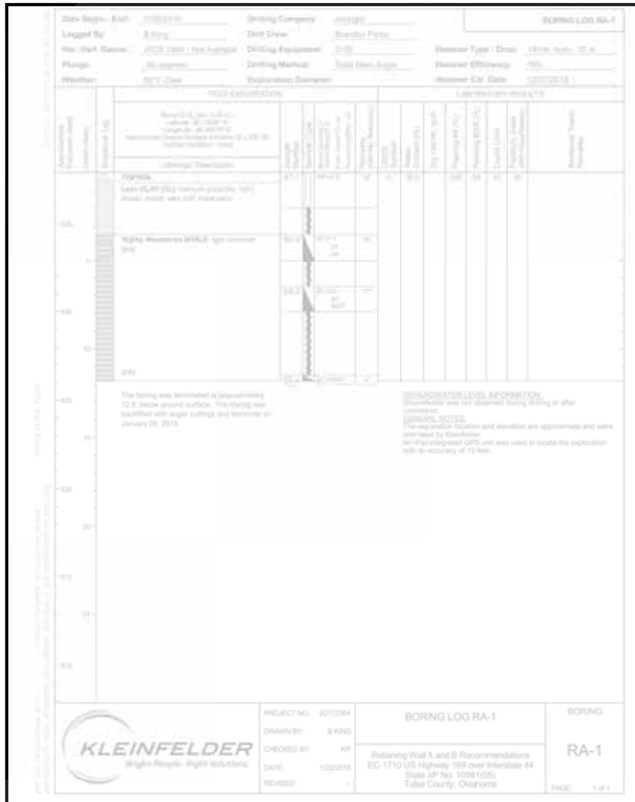

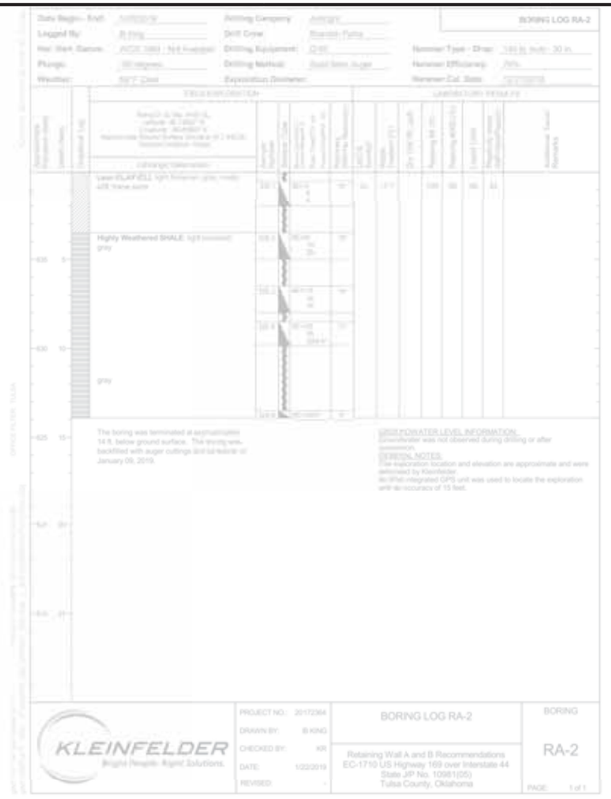

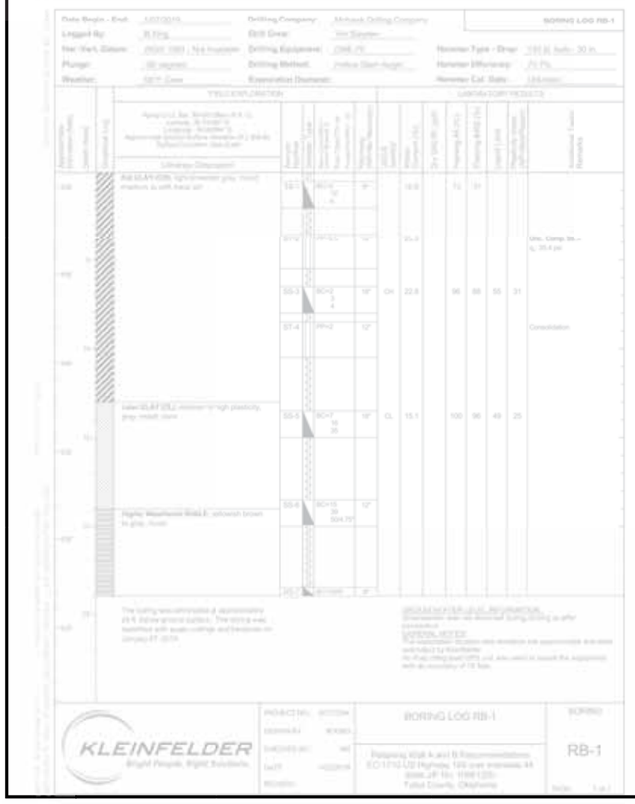

Survey	CKS	
Drawn	CKD	
Checked	CKE	
Approved		
Squad	C & K	

INTERCHANGE (OPERATIONAL IMPROVEMENT) TULSA COUNTY

SOIL BORINGS
RA-1, RA-2, RB-1, RB-2

JOB PIECE NO. 10981(05) SHEET NO. RW10

S:\Projects\ODOT\2015 EC-1710 I-44-169 Interchange\ACAD\PS&E\Plans\RW10-1098105-Bore Holes.dwg, 11x17, 9/17/2021 3:12:58 PM

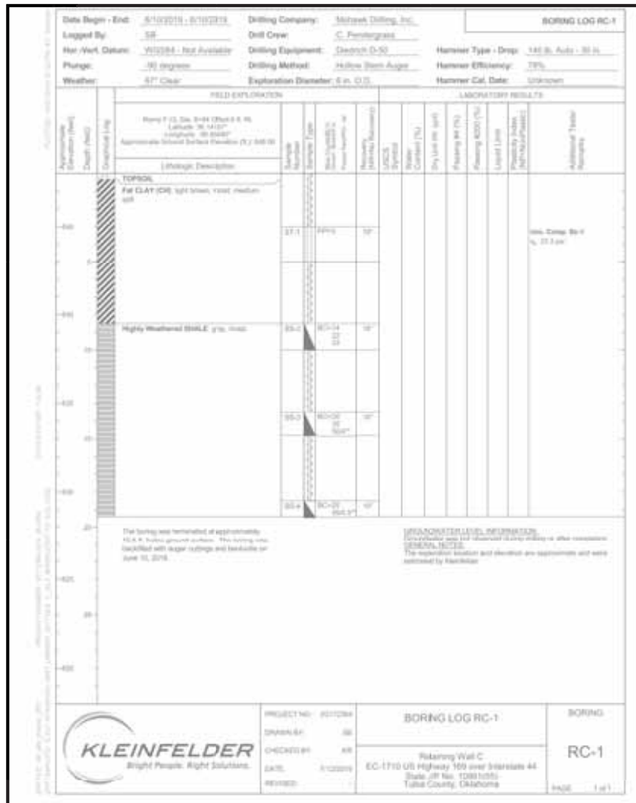

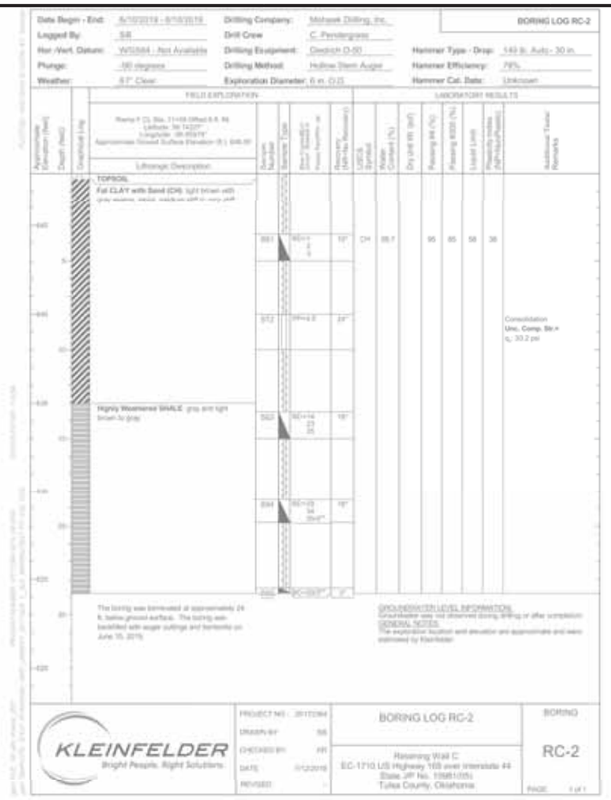

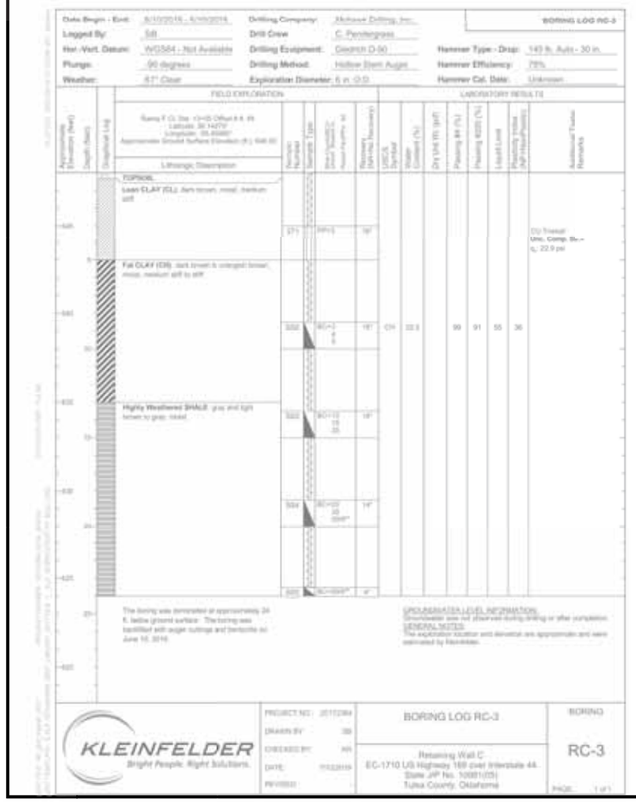

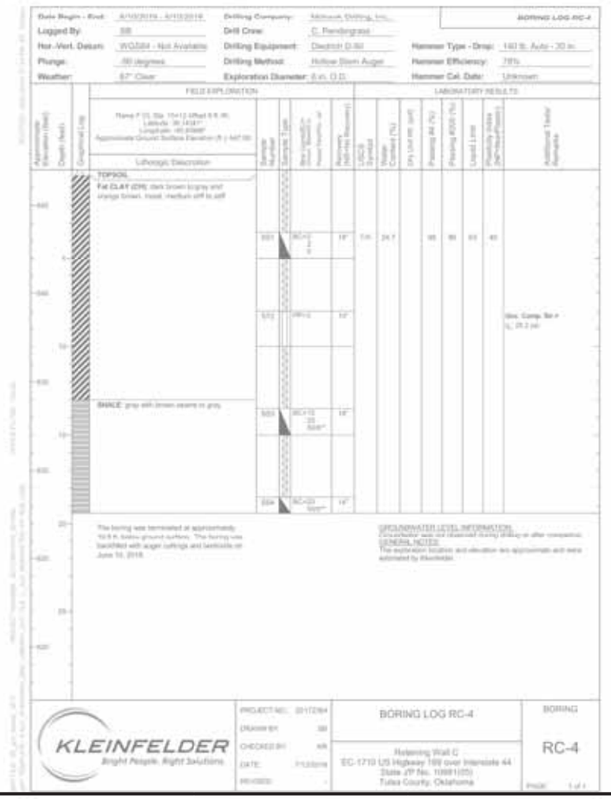

REGISTERED PROFESSIONAL ENGINEER
ROBIN D. SEWELL
16173
OKLAHOMA
9/17/21

Survey	CKS	
Drawn	CKD	
Checked	CKE	
Approved		
Squad	C & K	

INTERCHANGE (OPERATIONAL IMPROVEMENT) TULSA COUNTY

SOIL BORINGS
RC-1, RC-2, RC-3, RC-4

JOB PIECE NO. 10981(05) SHEET NO. RW11

S:\Projects\ODOT\2015 EC-1710 I-44-169 Interchange\ACAD\PS&E\Plans\RW11-1098105-Bore Holes.dwg, 11x17, 9/17/2021 3:13:03 PM

OKLAHOMA DEPARTMENT OF TRANSPORTATION					
FED. ROAD DIST. NO.	STATE	PROJ. NO.	FISCAL YEAR	SHEET NO.	TOTAL SHEETS
	OKLA.				
REVISIONS					
DESCRIPTION					DATE

STATE OF OKLAHOMA
DEPARTMENT OF TRANSPORTATION

SURVEY OF
US-169 & I-44

SWO 4430(1)

STATE JOB NO. 10981(04)

TULSA COUNTY, OKLAHOMA

INTERCHANGE

STATE OF OKLAHOMA
DEPARTMENT OF TRANSPORTATION
SURVEY DIVISION

SWO 4430(1) J/P 10981(04) : CO. TULSA

HORIZONTAL CONTROL:
( ) Oklahoma Coordinate System of 1927 Zone.
X Oklahoma Coordinate System of 1983 NORTH Zone.
( ) Oklahoma Dept. of Transportation Plane Coordinate System of 1927
( ) Oklahoma Dept. of Transportation Plane Coordinate System of 1983
( ) Arbitrary Coordinate System

HORIZONTAL PLANE DATUM DEFINITION:
Oklahoma Department of Transportation coordinates were derived by multiplying the Oklahoma Coordinate Systems of 1927 or 1983 by the combined adjustment factor of 1.00010. The ODOT Coordinate System is 2350 feet above sea level

1. GPS NETWORK adjusted to NGS
Stations WHITE, BRECK
A) Closure before adjustment X ; Y Angles
Trav. Length ; Angles ; 1:
B) ; is 1st Order before adjustment
C) Method of Distance Measurement:
( ) Electronic X GPS ( ) Triangulation ( )
D) Instrument used for angles
2. adjusted to ( ) Order
Stations
A) Closure before adjustment X ; Y Angles
B) ; is FIRST Order; Tied to
C) Method of Distance Measurement
( ) Electronic X GPS ( ) Triangulation ( )
D) Instrument used for angles

VERTICAL CONTROL IS (2nd) order. Level Line taken from NGS U 218
(2nd) order and tied to NGS V 218 (2nd) order.
( ) NGVD 29 datum
X NAVD 88 datum

ACCURACY DEFINITION:
(1) HORIZONTAL: (3rd Order = Class I = 1 : 10,000')
(3rd Order = Class II = 1 : 5,000')
(2) VERTICAL: (1st Order = 0.017 Ft. x sqrt. of Mi.)
(3rd Order = 0.050 Ft. x sqrt. of Mi.)

Distribution:
Copy w/survey reports
Copy in each Alignment and level book

Edward R. Seaton
Professional Land Surveyor

9-Jan-17
Date

(FORM SD #20)
Rev. 11/03

REGISTERED PROFESSIONAL LAND SURVEYOR EDWARD R. SEATON L.S. 1359 OKLAHOMA

INDEX OF SURVEY SHEETS

1.	TITLE SHEET
2-3.	HISTORICAL LETTER & WRITTEN REPORT
3-4.	CONTROL POINT LIST, COORDINATE POINT LIST
5-12.	ALIGNMENT REPORT, BENCHMARK AND CHECK LEVELS
13-26.	SURVEY DATA SHEETS
27.	GEOMETRIC DATA SHEETS

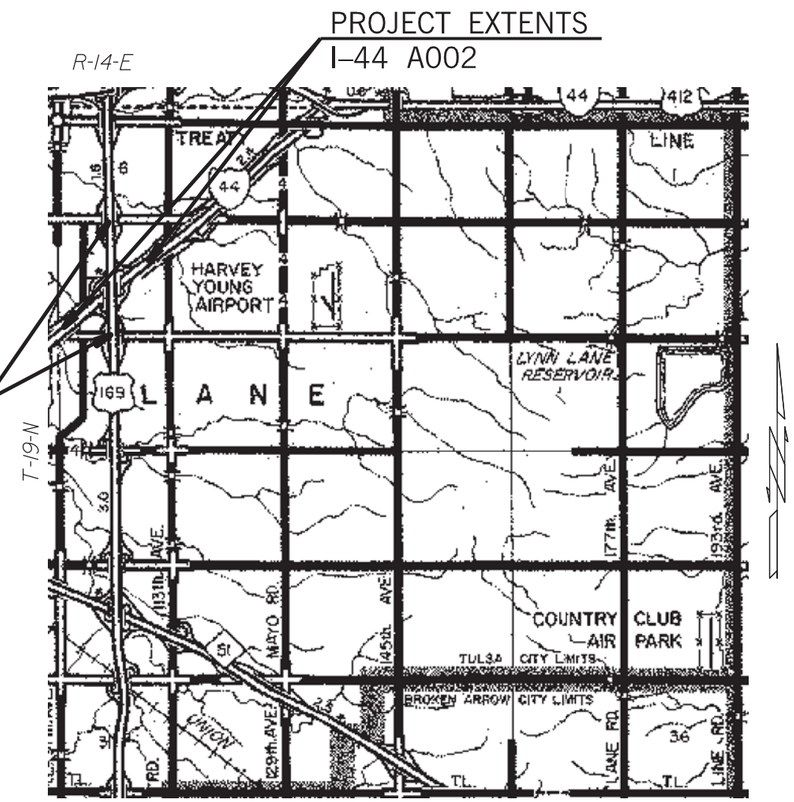

STATE OF OKLAHOMA
DEPARTMENT OF TRANSPORTATION

SWO 4430 Job/Piece 10981(04) Engr. Contract No. 1710

LAND SURVEYOR'S CERTIFICATION

I hereby certify that all land and property sub-division distances, angles, corners, and monumentation made or used in conjunction with this survey and depicted or recorded herein or hereon were recovered, established or re-established in substantial conformity with:

- Applicable instructions contained in the U.S. Government Bureau of Land Management publication **"Manual of Survey Instruction"**;
- Its supplement, **"Restoration of Lost or Obliterated Corners and Sub-division of Sections"**;
- **"Oklahoma Minimum Standards for the Practice of Land Surveying"** as adopted by the State Board of Licensure for Professional Engineers and Land Surveyors; and
- Sound land surveying practices;

including a thorough search, study, analysis and consideration of all existing records and field evidence.

I further certify that all survey monuments depicted exist and that all land survey work was done by me or under my direct supervision.

Dated this 18th day of December, 2017.

Land Surveyor [signature]
Signature

Dustin M. McNally
Print Name

Oklahoma Licensed Land Surveyor No. 1636

Certificate of Authorization No. 1422

REGISTERED PROFESSIONAL LAND SURVEYOR Dustin M. McNally 1636 OKLAHOMA

UTILITIES

CITY OF TULSA	918-596-9565
AEP-PSO	918-250-6211
MBO	877-777-8941
ONG	800-644-5463

THIS SURVEY MEETS THE OKLAHOMA MINIMUM STANDARDS FOR THE PRACTICE OF LAND SURVEYING AS ADOPTED BY THE OKLAHOMA STATE BOARD OF REGISTRATION FOR PROFESSIONAL ENGINEERS AND LAND SURVEYORS, MAY 11, 2010.

PROJECT LENGTH (US-169/A001) 5,288.73 FT. 1.00 MI.
PROJECT LENGTH (I-44/A002) 5,020.77 FT. 0.95 MI.

BEGINNING STATION (US-169/A001):	158+47.71
ENDING STATION (US-169/A001):	211+36.44
BEGINNING STATION (I-44/A002):	585+95.31
ENDING STATION (I-44/A002):	636+16.08

PLS	DMM	
DRAWN	ARR	
CHECKED	DMM	
APPROVED	DMM	
CREW	GES, INC.	

OKLAHOMA DEPARTMENT OF TRANSPORTATION
SURVEY DIVISION

SURVEY DATA SHEET

SWO 4430(1) PROJECT NO. 10981(04) SHEET NO. S001

OKLAHOMA DEPARTMENT OF TRANSPORTATION					
FED. ROAD DIST. NO.	STATE	PROJ. NO.	FISCAL YEAR	SHEET NO.	TOTAL SHEETS
	OKLA.				

DESCRIPTION	REVISIONS	DATE

State of Oklahoma
Department of Transportation

Guy Engineering Services, Inc.
Dustin M. McNally, PLS 1636
6910 E 14th St, Tulsa, OK 74112
Phone (918) 437-0282 Fax (539) 424-5013 C.A. 1427, Expires 6/2018

To: Mr. William Tackett, Chief of Surveys

From: Dustin M. McNally, Professional Land Surveyor

Subject: SWO 4430(1), J/P No. 10981(04), US-169 & I-44 Interchange

TULSA COUNTY

Historical Letter and Written Report

1. General:

Survey began: May 8, 2017
Survey completed: December 19, 2017

Personnel on this survey:

Dustin M. McNally, PLS
Jason Mock, Crew Chief
Brandon Travers, Survey Technician
Amanda Reid, Survey Technician
Ryan Harrison, LSIT
Tim DeArmon, Crew Chief
Redmon Kaiser, Crew Member
Matthew Dawson, Crew Member
Dakota Blanchard, Crew Member
Robynn Parks, CAD Technician

Previous Surveys and Plans relevant to this project:
STATE JOB NO. 11301(04) RDY
FAP NO. F-521(45)
FAP NO. ACIR-44-2(326)233
FAP NO. ACIR-44-2(335)234
FAP NO. I-44-2(18)099
FAP NO. I-44-2(19)099
FAP NO. U-521(7)(8)
FAP IN-591(19)
SWO2188(1)-US-75 survey
SWO2874(1)(2)-Mingo Valley Expressway survey
SWO3559(1)-I-44 survey
SWO3712(1)-US-169 survey

2. Assignment:

Portions of this survey were assigned to me by Mr. Kevin Kreiwall, of Craig & Keithline, Inc. The remaining portions were previously assigned to Aerial Data Services, Inc.

3. Purpose:

The purpose of this survey is to provide sufficient information needed redesign the US-169 & I-44 Interchange. The survey will include the Alignment, Topographic/Planimetric data, Surface Features/DTM data, Land Ties, Utilities, and all other pertinent information needed to aid in the design.

4. Survey Limits:

US-169 Survey: This survey begins at the intersection with E. 21st St. S. in Tulsa and extends northerly to the intersection with E. 11th St. S. (approximate centerline length=1.0 miles).
I-44 Survey: This survey begins at the intersection with E. 21st St. S. in Tulsa and extends northeasterly to the intersection with NS 401.75 Rd. (approximate centerline length = 0.95 miles).

5. Alignment:

A001-Centerline of US-169 Survey
The Centerline of Survey for this alignment is along and identical to the centerline of present U.S. 169 as established under SWO 2188(1) & 2874(2) surveys.
A002-Centerline of I-44 Survey
The Centerline of Survey for this alignment is along and identical to the centerline of present I-44 as shown in FAP IN-591(19) plans.

6. Stationing:

US-169 Survey: Stationing for this alignment is taken from SWO 2188(1) & 2874(2) surveys. P.O.T. Sta. 179+97.56 is held at the centerline of I-44. Statoning increases northerly and decreases southerly from this point without equation, except with other surveys and plans.
I-44 Survey: Stationing for this alignment is taken from SWO 2188(1), and shown in FAP NO. I-44-2(18)099 plans. Stationing increases northeasterly and decreases southwesterly from this point without equation, except with other surveys and plans.

7. Horizontal Control:
Horizontal control for this survey is N.G.S. Oklahoma State Plane Coordinate System NAD 83 Lambert Projection North Zone (Zone 3501).

8. Vertical Control:

A. Datum:
Level datum for this survey is N.G.S. N.A.V.D. 88.
B. Source:
Level datum for this survey was taken from NGS 3D monument U218.
C. Method:
A double line of differential levels was run through the site.
D. Accuracy:
These benchmarks exceed the requirements for N.G.S. 3rd order leveling.
E. Results:
The results of these level runs have been placed in a list in the project design file showing the BM number, elevation, run 1 and run 2 differences, description of each benchmark.

9. Measurement Units:

The distances, coordinates, and elevations shown on this survey are in US SURVEY FEET. All angles and bearings shown are in degrees, minutes, and seconds.

10. Topography/Digital Terrain Model:

Topography on this project was obtained from aerial photogrammetry imagery provided by Aerial Data Services, Inc. In addition, field level topography was obtained using Trimble S-6 Robotic Total Stations and Trimble R8 GPS receivers with Trimble TSC-2 data collectors. GPS RTK surveying was used for land ties and miscellaneous topography.

11. Land Ties:

Section 7, T-19-N, R-14-E, I.M.

We recovered previously established and recorded monuments at all the quarter section and section corners. I accepted these monuments and filed records accordingly.

12. Right-of-Way:

The existing rights-of-way shown on this survey were obtained from documents found on file in the ODOT right-of-way division. All property divisions adjacent to the present rights-of-way throughout the project limits have been properly established. This includes, as a minimum, the complete mathematical bounding of all parcels that fall partially or completely within the survey coverage limits. "Property Division" includes present rights-of-way. The present rights-of-way have been tied to the centerline of survey and shown on the submitted survey notes.

13. Environmental Concerns:

There were no hazardous waste sites encountered during this survey.

14. WPA Structures:

PLS	DMM	
DRAWN	ARR	
CHECKED	DMM	
APPROVED	DMM	
CREW	GES, INC.	

OKLAHOMA DEPARTMENT OF TRANSPORTATION
SURVEY DIVISION

SURVEY DATA SHEET

SWO 5250(1) PROJECT NO. 10981(04) SHEET NO. S002

We did not identify any WPA structures during the course of this survey.

15. Utilities:

Note: All utilities are shown as flagged by the utilities contacted or their representatives. All utilities serving the project area were contacted through OKIE One-Call. All utility locations are approximate, and depths and types are unknown. The utility locations shown on this survey are based on the flagged locations as performed by the utility owners or their contractors. Any inaccuracies or omissions are the responsibility of the utility owners and/or their contractors, and Guy Engineering Services accepts no responsibility for their failure to respond to the OKIE survey requests. Contact CALL OKIE at 1-800-522-OKIE.

16. Cross Sections and DTM Information

The surface area was mapped through a combination of aerial photogrammetry, conventional total station and GPS methods. All paved surfaces, structures, and bridge structures were located with total stations. GPS was used to gather ground surface data outside of the present right-of-way. A combination of breakline and cross section methods were used to obtain the DTM.

17. Data Submitted:

Computer files:

1. SWO4430_1_v1.dgn -Survey Data Sheets (Guy)
2. SWO4430_1_v1_TOPO.dgn -Topographic/Planimetric Data (Guy)
3. SWO4430_1_v1_SFF.dgn -Surface Feature File (ADS)
4. SWO4430_1_v1_TRI.dgn -DTM Triangle Drawing (ADS)
5. SWO4430_1_v1_PERI.dgn -Perimeter File (ADS)
6. SWO4430.txt -Coordinate Geometry List (Guy)
7. SWO4430 Control.txt -Control Coordinates (ADS)
8. SWO4430_1_v1.ALG -InRoads Alignment Files (Guy)
9. SWO4430_1_v1.dtm -InRoads DTM File (ADS)

PDF Files:

Historical Letter and Written Report (Guy)
Oklahoma Certified Corner Record Forms (Guy)
SD Form No. 41 Surveyor Certification (Guy)
Check Levels (ADS)
Benchmark Certification (ADS)
Ownership List (Guy)
SD Form No. 7 Public & Privately Owned Utilities List (GUY)
SD Form No. 20 Control Accuracy Statement (ADS)
SD Form No. 11 Survey Control Monument Record (ADS)

COORDINATE POINT LIST

SWO 4430(1) JOB PIECE 10981(04)

PT. NO.	NORTHING	EASTING	PT. NO.	NORTHING	EASTING
1000	419569.102647623	2600429.764112510	1057	421731.695097908	2600203.756170760
1001	419753.663788525	2600420.815936430	1058	421849.976154075	2600096.018684040
1002	419938.184734333	2600411.074238670	1059	421755.214043222	2599967.108185480
1003	420890.696805028	2600360.786805750	1060	421758.515666053	2599964.681162450
1004	421716.006827058	2600317.214945980	1061	421875.352737288	2600123.621533960
1005	421867.848018250	2600309.198560730	1062	421975.852162740	2599953.878173580
1006	422212.338453401	2600291.011348000	1063	421894.353260421	2600091.529682370
1007	422866.844117545	2600256.457025080	1064	421902.786992352	2600251.275984740
1008	423531.431167979	2600221.370460040	1065	422877.376345918	2600211.836968580
1009	424165.036175098	2600187.919577600	1066	422793.023389319	2598614.028849270
1010	424850.516441668	2600151.729964910	1067	422433.693050326	2600173.191417740
1011	419510.726100000	2597896.117700000	1068	422562.366077305	2599614.869045640
1012	420052.595684717	2598491.016545820	1069	422157.379381121	2600020.166954560
1013	420624.975966698	2599119.411972920	1070	422105.205403248	2599968.033039080
1014	421197.356248676	2599747.807400020	1071	421700.219484088	2600373.330170380
1015	421712.221601113	2600313.059284520	1072	421723.521631607	2599800.847533720
1016	422225.402814883	2600876.462214640	1073	421573.151537535	2599794.726918190
1017	422891.655358244	2601607.916572380	1074	421596.453728384	2599222.243216920
1018	420935.477285869	2599608.085103700	1075	421172.872518502	2599608.066413420
1019	420647.555255175	2599868.341774070	1076	421154.172517995	2599587.536365170
1020	421021.219857422	2599978.125297150	1077	420307.009724771	2600359.183098360
1021	420981.439599927	2600113.523339380	1078	420991.370613461	2599440.067407550
1022	420696.832578107	2600029.905139100	1079	420962.399503230	2599418.495917760
1023	420712.471163106	2600326.129032370	1080	421646.760391922	2598499.380226950
1024	421216.399174884	2600287.513826340	1081	420799.597598696	2599271.026960130
1025	421207.963858546	2600127.737513120	1082	420976.881000486	2602238.013535430
1026	421326.249190071	2600019.996132150	1083	422565.364801188	2601177.670545090
1027	420819.365285954	2600408.613997330	1084	424153.822083386	2600117.345256350
1028	420849.572502018	2600980.779571350	1085	422741.899375083	2601403.409220970
1029	421329.978816261	2600668.536567850	1086	421082.956115578	2599767.996730480
1030	421331.696137746	2600671.178779450	1087	420922.229056912	2600315.055257680
1031	421571.896988208	2600515.058776920	1088	421149.705234137	2600391.173853000
1032	421658.848890148	2600788.022639910	1089	421450.729018344	2600854.318663450
1033	421795.452557698	2600744.507910250	1090	421962.155980450	2600691.404984800
1034	421878.264209822	2601004.474489010	1091	421000.847518720	2600410.886633640
1035	422079.970023687	2600820.748724750	1092	421574.293265790	2600750.642896460
1036	421701.423602392	2600431.886899640	1093	421816.923209131	2600558.689704200
1037	421583.137438490	2600539.629038800	1094	421334.028543753	2599784.993733430
1038	421682.408913191	2600665.108756010	1095	421946.994584434	2599809.943704290
1039	421682.079651389	2600665.369246750	1096	422273.596686361	2600136.295020980
1040	421557.993550073	2600508.523698230	1097	422652.819059135	2600223.692003510
1041	421456.049853637	2600680.585807330	1098	420873.899293000	2599352.600079620
1042	421537.606463115	2600542.933331220	1099	421079.873030841	2599505.964823650
1043	421529.220232542	2600383.154246650	1100	421612.020482064	2600072.369776020
1044	422215.615204796	2600346.916342490	1101	421863.612268574	2599887.424647200
1045	422224.050522025	2600506.692672530	1102	422431.051298848	2600223.386515730
1046	422105.765178047	2600614.434064840	1103	422583.967791507	2600315.452626610
1047	422388.827280138	2600951.928100620	1104	422298.526269431	2600852.789915350
1048	422529.606937341	2600823.697537420	1105	422485.588098446	2601058.158273000
1049	422361.436458577	2600734.362889650	1106	422645.140172120	2601297.180822030
1050	422431.894291699	2600601.727592780	1107	422318.128370979	2600815.889397080
1051	422937.883581407	2600870.516593720	1108	419564.170965025	2600218.517433490
1052	422907.676974104	2600298.362550470	1109	419645.907261433	2600214.202318980
1053	422462.886710904	2600974.814297340	1110	419741.653925837	2600209.147553370
1054	422454.193264503	2600965.270079730	1111	419833.829722613	2600235.540675370
1055	422666.319007272	2600772.053217830	1112	420110.122369212	2600314.652826100
1056	422412.920977330	2600637.444433230	1113	420298.044830392	2600335.991182480

Page 1 of 4

COORDINATE POINT LIST

SWO 4430(1) JOB PIECE 10981(04)

PT. NO.	NORTHING	EASTING	PT. NO.	NORTHING	EASTING
1114	419574.235686079	2600642.576542460	7631	422984.060818480	2600063.548923180
1115	419668.260417675	2600637.612683060	7632	423102.176906062	2600060.552767710
1116	419852.891492637	2600596.606061310	7633	423220.292993644	2600057.556612230
1117	420119.318362726	2600488.842051340	7634	423338.409081226	2600054.560456760
1118	420303.949437688	2600447.835429590	7635	423456.525168808	2600051.564301290
1119	420202.298165974	2600341.045948090	7636	423574.641256390	2600048.568145820
1120	419764.007082080	2600632.557917450	7637	423692.757343972	2600045.571990350
1121	420208.202773283	2600452.890195200	7638	423810.873431553	2600042.575834870
1122	424796.787674188	259942.186156856	7639	423928.989519135	2600039.579679400
1123	424640.616319885	2599950.516300180	7640	424047.105590319	2600036.583524350
1124	424670.821804744	2600522.649082770	7641	424168.224628941	2600033.511195440
1125	424484.085261772	2599981.005513850	7642	424216.639678149	2599970.394341430
1126	424278.934994443	2600051.732932970	7643	424396.216950074	2599965.850018960
1127	423656.410277224	2598246.052565290	7644	424645.171252361	2599900.849669940
1128	423757.106480666	2600153.375004830	7645	424710.757672202	2599883.725482330
1129	423763.011565753	2600265.225312130	7646	424779.383769442	2599880.102319430
1130	423863.707769191	2602172.547751670	7647	419567.294734945	2598180.976329290
1131	424292.641679824	2600311.356113480	7648	419966.769033598	2598619.544588080
1132	424504.098795357	2600360.088939070	7649	420269.173306368	2598951.543206770
1133	424632.764587126	2599801.793850200	7650	420242.566134793	2598975.778615950
1134	424662.970071984	2600373.926632790	7651	420176.915516425	2598977.330239090
1135	424806.333174696	2600366.357844290	7652	420177.151795991	2598987.327447300
1136	424025.163168365	2600139.223076350	7653	419586.172540653	2599001.294978900
1137	424560.208301059	2599954.761404230	7654	419588.026004722	2599081.273513670
1138	424031.068253452	2600251.073383650	7655	419717.972736557	2599078.202280510
1139	424582.562053158	2600378.171736850	7656	420169.236774386	2599067.536855880
7600	419807.730752257	2597792.184912750	7657	420249.641243970	2599065.636532030
7601	420124.590781742	2598265.091184970	7658	420249.877523535	2599075.633740240
7602	420141.205972900	2598253.958556220	7659	420344.423000000	2599073.399200000
7603	420157.904916019	2598278.881342960	7660	420379.412390456	2599072.570675430
7604	420141.289724861	2598290.013971710	7661	420575.172585410	2599287.488651710
7605	420238.845562854	2598435.613805660	7662	420574.702430000	2599443.879950000
7606	420719.477053598	2598963.281584850	7663	420573.285833568	2599450.069199910
7607	420858.928565893	2598959.734046260	7664	420551.145017414	2599495.967268480
7608	420861.194367959	2599059.708758480	7665	420546.409753434	2599519.826800220
7609	420862.569346842	2599120.377393280	7666	420546.511164527	2599538.322632080
7610	420880.851846392	2599140.449082550	7667	420545.646468737	2599544.423089030
7611	420888.244733765	2599133.715196690	7668	420521.967234620	2599711.460856660
7612	420955.583590325	2599207.644070820	7669	420536.769157932	2599933.928933000
7613	420948.190702932	2599214.377956470	7670	420880.826338093	2599925.936481570
7614	421059.901506928	2599337.021172720	7671	420881.313393695	2599947.426992310
7615	421142.529451357	2599420.482614930	7672	419657.109527907	2600843.702305350
7616	421288.735064068	2599556.365206950	7673	419948.666474648	2599969.797373510
7617	421568.793908322	2599677.581839970	7674	419825.823498101	2599852.709359120
7618	421631.049096368	2599681.830552880	7675	419625.881005656	2599857.505160920
7619	422028.310719834	2599765.820816030	7676	419605.656838951	2599847.968249420
7620	422042.565917472	2599771.085823940	7677	419699.999165591	2600673.997300720
7621	422106.842671566	2599782.543038090	7678	419701.580798994	2600703.955578970
7622	422165.710628416	2599781.580671730	7679	419671.622520743	2600705.537212380
7623	422178.300358696	2599763.644095960	7680	419654.546885988	2600737.456841100
7624	422242.986251291	2599871.466562170	7681	419759.370396256	2600670.862824140
7625	422245.819556450	2599998.434953440	7682	419788.118698679	2600662.041566700
7626	422410.348778225	2599994.763476720	7683	419845.576998255	2600644.410805570
7627	422574.878000000	2599991.092000000	7684	419903.035373549	2600626.780021200
7628	422626.709604694	2600072.613563030	7685	419960.493673126	2600609.149260070
7629	422747.828643316	2600069.541234120	7686	420017.951972702	2600591.518498940
7630	422865.944730898	2600066.545078650	7687	420075.410272278	2600573.887737810

Page 2 of 4

PLS	DMM	
DRAWN	ARR	
CHECKED	DMM	
APPROVED	DMM	
CREW	GES, INC.	

OKLAHOMA DEPARTMENT OF TRANSPORTATION
SURVEY DIVISION

SURVEY DATA SHEET

SWO 5250(1) PROJECT NO. 10981(04) SHEET NO. S003

OKLAHOMA DEPARTMENT OF TRANSPORTATION					
FED. ROAD DIST. NO.	STATE	PROJ. NO.	FISCAL YEAR	SHEET NO.	TOTAL SHEETS
	OKLA.				

REVISIONS	
DESCRIPTION	DATE

COORDINATE POINT LIST

SWO 4430(1) JOB PIECE 10981(04)

PT. NO.	NORTHING	EASTING	PT. NO.	NORTHING	EASTING
7688	420132.868571854	2600556.256976680	7745	424179.638915247	2600572.720663740
7689	420190.326871430	2600538.626215550	7746	424223.234609373	2600732.466870550
7690	420252.084894596	2600519.676108040	7747	423856.044417815	2600419.925330370
7691	420265.824623240	2600518.950725440	7748	423536.057698912	2600427.863445020
7692	420336.101008850	2600515.240516260	7749	423534.168747281	2600343.543442610
7693	420396.012672167	2600512.077507790	7750	423086.651422824	2600367.188287480
7694	420459.918450499	2600508.703631870	7751	423086.077899853	2600356.333428140
7695	420596.756698353	2600501.479320050	7752	422875.994066009	2600373.815958190
7696	420637.426735095	2600499.332164320	7753	422479.819999997	2600623.888000000
7697	420780.435884719	2600491.782062610	7754	422457.884621628	2600903.941500370
7698	420845.200396859	2600488.362850230	7756	422999.199443265	2601503.231294690
7699	420906.872135419	2600485.106919400	7757	423039.602757189	2601547.588619040
7700	420972.312980204	2600481.652000360	7758	423090.125819810	2601603.056046300
7701	421025.434658443	2600478.847466000	7759	422693.184896665	2601612.777098470
7702	421060.088289969	2600506.871858500	7760	419591.460081977	2599231.237473210
7703	421128.533291712	2600562.223332760	8001	422011.377738295	2599030.448983320
7704	421188.169259243	2600610.450940890	8002	422161.329661241	2599026.634322410
7705	421195.838083901	2600620.392500390	8003	422407.515473066	2599867.795085450
7706	421258.944839840	2600699.608870190	8004	422572.044694841	2599884.123608720
7707	421316.497104118	2600776.810058790	8005	422622.604639552	2599888.658503060
7708	421344.039037947	2600812.514327200	8006	422743.679606351	2599885.587292090
7709	421395.264782044	2600828.699116180	8007	422861.752714758	2599882.592226840
7710	421451.519489206	2600846.472807520	8008	422979.825823165	2599879.597161580
7711	421532.473830971	2600872.050355720	8009	423097.898931572	2599876.602096330
7712	421547.714976463	2600876.865800140	8010	423215.972039979	2599873.607031070
7713	421584.624218122	2600869.366990990	8011	423334.045148386	2599870.611965820
7714	421690.993511358	2600847.756061250	8012	423452.118256793	2599867.616900570
7715	421817.623622330	2600822.028763930	8013	423570.191365200	2599864.621835310
7716	421908.345769877	2600803.596847190	8014	423688.264505958	2599861.626769240
7717	421948.481761759	2600847.660688430	8015	423806.337566694	2599858.631705190
7718	422051.557625167	2600960.823918430	8016	423924.410675101	2599855.636639940
7719	422125.408897332	2601041.902535880	8017	424042.483783508	2599852.641574690
7720	422099.499071626	2601100.347440960	8018	424163.558750306	2599849.570363710
7721	422121.260243985	2601155.131524910	8019	424213.596713822	2599850.432929430
7722	422155.300292417	2601176.310839910	8020	424393.515613847	2599845.880427890
7723	422171.651955709	2601181.389083710	8021	424387.370524153	2599572.969603130
7724	422230.046673739	2601199.524401800	8023	424589.543380410	2599860.701742700
7725	422350.978927676	2601237.081649540	8024	424644.239516474	2599859.470158490
7726	422424.120452523	2601317.381061310	8025	424580.079961542	2599567.220421900
7727	422457.789880793	2601354.345498270	8027	424580.125331071	2599563.627430250
7728	422511.748506539	2601413.584704950	8028	424602.283575550	2599566.687857370
7729	422556.942838694	2601463.201913430	8029	424600.410874211	2599483.518938360
7730	422602.137170849	2601512.819121910	8030	424770.367794899	2599479.692045370
7731	422708.861691245	2601629.988079310	8031	424654.670290109	2600560.964557860
7732	422862.021622807	2601761.011113030	8032	424226.836637830	2600892.944141870
7733	424791.012198488	2600396.730988250	8033	423858.521553492	2600530.652385910
7734	424794.627793781	2600557.500880910	8034	423539.657628272	2600583.558958540
7735	424809.623240603	2600557.129772660	8035	423546.622030669	2600899.439564100
7736	424813.238855976	2600717.900558220	8036	423384.932598111	2600903.061759410
7737	424838.231300812	2600717.283532570	8037	423253.239389927	2601070.646248870
7738	424651.054882230	2600400.202998670	8038	423272.086261851	2601156.410337960
7739	424221.017421523	2600410.871212260	8039	423228.106804483	2601294.728728110
7740	424224.625260173	2600571.607338840	8040	423268.510118407	2601339.086052460
7741	424219.626777403	2600571.731041600	8041	423330.687971927	2601143.532466390
7742	424171.032660629	2600412.111216110	8042	423311.841100003	2601057.768377300
7743	424173.518425935	2600522.856824650	8043	423386.276391585	2600963.046709350
7744	424178.516908705	2600522.733121900	8044	423547.965824144	2600959.424514040

Page 3 of 4

COORDINATE POINT LIST

SWO 4430(1) JOB PIECE 10981(04)

PT. NO.	NORTHING	EASTING	PT. NO.	NORTHING	EASTING
8045	423562.125619645	2601591.496808120	8102	420452.028527003	2600634.294260210
8046	422513.422522139	2601593.625749760	8103	420407.881927311	2600651.645848620
8047	422468.228189983	2601544.008541280	8104	420403.577921335	2600651.873076620
8048	422423.033857828	2601494.391332790	8105	420343.576262362	2600655.040836370
8049	422369.075232083	2601435.152126120	8106	420309.435091860	2600656.843303630
8050	422335.405803815	2601398.187689150	8107	420286.215535639	2600659.059747700
8051	422284.025863424	2601341.779527060	8108	420243.250729115	2600668.562952160
8052	422234.690154973	2601326.738223850	8109	420231.609265108	2600672.135686590
8053	422135.868503504	2601296.609814440	8110	420174.095818127	2600689.786410940
8054	422024.018082696	2601237.068302620	8111	420116.828304383	2600707.361659030
8055	421987.800383842	2601104.971948160	8112	420059.564361342	2600724.935811280
8056	421987.800383842	2600985.621948160	8113	420002.300418301	2600742.509963530
8057	421864.131992137	2601033.722091620	8114	419945.036475260	2600760.084115780
8058	421852.208108736	2601003.895222470	8115	419887.772562247	2600777.658258820
8059	421850.293500000	2600938.285000000	8116	419830.314262670	2600795.289019950
8060	421814.949648936	2600922.210136890	8117	419822.777080037	2600797.605199940
8061	421778.461491796	2600936.565711140	8118	419789.192050948	2600818.957638330
8062	421763.545900000	2600972.414200000	8119	419770.473493896	2600859.139564690
8063	421805.411830774	2601021.524429120	8120	419577.596896344	2598628.647804340
8064	421817.533546081	2601052.159499430	8121	419721.425672443	2599228.246604650
8065	421677.425429387	2601107.964544350	8122	420173.017247433	2599227.492187210
8066	421625.977277914	2600973.029925250	8123	420276.931315174	2599225.036224420
8067	421617.564886840	2600954.059451950	8124	420347.961482827	2599223.357457980
8068	421518.245227925	2600992.689289180	8125	420280.064163618	2599365.001277000
8069	421491.038140875	2600957.876874400	8126	420395.042094844	2599362.285502540
8070	421437.671641200	2600964.178527400	8127	420399.428349066	2599547.871998900
8071	421429.084928190	2600973.192594000	8128	420293.416272056	2599961.528237330
8072	421378.959200000	2600967.295400000	8129	420578.648641173	2599291.304886510
8073	421319.401900000	2600960.288600000	8130	420582.168309455	2599543.561632620
8074	421259.812870570	2600953.278067090	8131	422071.332040215	2601276.934156730
8075	421336.635298236	2600813.805944750	8132	421987.800383842	2601206.551948160
8076	421274.955562342	2600824.566267600	8133	421211.476992905	2600947.591445510
8077	421208.707805104	2600836.123503470	8134	420957.950871977	2600602.547975620
8078	421200.942672258	2600946.557220100	8135	422534.408527408	2601616.665519330
8079	421173.000330131	2600945.781039610	9000	424794.606000000	2597668.680000000
8080	421120.391456872	2600946.995203280	9001	424822.583817876	2598911.208544290
8081	421117.956773100	2600841.502037200	9002	424852.395000000	2600235.159000000
8082	421116.568976671	2600781.369776540	9003	424911.947000000	2602883.179000000
8083	421115.819106698	2600748.878428540	9004	423474.919500000	2597700.317500000
8084	421113.394116562	2600725.257991600	9005	423502.789641206	2598943.637764620
8085	421095.817278093	2600677.433718960	9006	422155.233000000	2597731.955000000
8086	421064.353907381	2600639.207758120	9007	422182.995412934	2598976.066986210
8087	421021.008796911	2600612.845624360	9008	422212.553478581	2600300.647232490
8088	420971.347088206	2600602.439796110	9009	422271.607000000	2602947.002000000
8089	420913.215699374	2600604.909748310	9010	420831.872000000	2597765.908500000
8090	420871.700988892	2600607.101498190	9011	420860.061466926	2599009.721402370
8091	420853.088528201	2600605.759401920	9012	419508.511000000	2597799.862000000
8092	420825.972755878	2600594.494809880	9013	419537.127699360	2599043.375813990
8093	420793.632479257	2600586.222899910	9014	419567.571000000	2600366.263000000
8094	420758.286209666	2600605.804851910	9015	419631.357000000	2603010.789000000
8095	420749.130165684	2600646.004328600			
8096	420640.869456035	2600648.502884700			
8097	420640.738853086	2600642.843949120			
8098	420637.774444033	2600514.398152460			
8099	420533.216121404	2600663.320017900			
8100	420511.620121674	2600630.914892380			
8101	420466.302451577	2600625.930109730			

Page 4 of 4

CONTROL POINT LIST

SWO 4430(1) JOB PIECE 10981(04)

PT. NO.	NORTHING	EASTING	ELEVATION
1	419057.4270	2600518.8900	663.4455
2	419646.4600	2600608.0750	650.5917
3	420319.2670	2600321.8950	652.8695
4	420952.8090	2600270.8550	646.1804
5	421777.7050	2600192.9590	639.8601
6	422482.8580	2600370.9400	650.6664
7	423133.4220	2600355.3900	648.3226
8	423788.3250	2600298.7070	652.2523
9	424348.3540	2600356.0000	646.3275
10	424920.3680	2600318.7780	642.5283
11	421335.1350	2599738.1740	638.7291
12	421028.3450	2599332.1600	634.6046
13	420432.4720	2599121.8880	638.8991
14	420031.5510	2598631.9490	637.6266
15	419520.4110	2598231.9820	634.7606
16	422040.8080	2600815.5780	645.9516
17	422476.0540	2601305.8440	658.3781
18	422923.6560	2601766.1140	663.8791
19	423359.0760	2602291.1430	658.7941
7401	419057.4830	2600518.8640	663.4455
7402	424920.3680	2600318.7780	642.5283
7501	425509.5470	2600295.7800	633.6860

PLS	DMM		OKLAHOMA DEPARTMENT OF TRANSPORTATION SURVEY DIVISION
DRAWN	ARR		SURVEY DATA SHEET
CHECKED	DMM		
APPROVED	DMM		
CREW	GES, INC.		SWO 4430(1) PROJECT NO. 10981(04) SHEET NO. S004

OKLAHOMA DEPARTMENT OF TRANSPORTATION					
FED. ROAD DIST. NO.	STATE	PROJ. NO.	FISCAL YEAR	SHEET NO.	TOTAL SHEETS
	OKLA.				

DESCRIPTION	REVISIONS	DATE

Project Name: SWO4430
Description: US-169 & I-44 Interchange
Horizontal Alignment Name: 169
Description: A001
Style: Default

	STATION	NORTHING	EASTING
Element: Circular			
PC (1000)	158+47.71	419569.10	2600429.76
PI (1001)	160+32.49	419753.66	2600420.82
CC ( )		415407.14	2514586.92
PT (1002)	162+17.27	419938.18	2600411.07
Radius:	85943.6783		
Delta:	0°14'46.9326" Left		
Degree of Curvature(Arc):	0°04'00.0000"		
Length:	369.5553		
Tangent:	184.7779		
Chord:	369.5550		
Middle Ordinate:	0.1986		
External:	0.1986		
Tangent Direction:	N 2°46'32.6216" W		
Radial Direction:	N 87°13'27.3784" E		
Chord Direction:	N 2°53'56.0879" W		
Radial Direction:	N 86°58'40.4458" E		
Tangent Direction:	N 3°01'19.5542" W		
Element: Linear			
PT (1002)	162+17.27	419938.18	2600411.07
POE (1010)	211+36.44	424850.52	2600151.73
Tangent Direction:	N 3°01'19.5542" W		
Tangent Length:	4919.1729		

Project Name: SWO4430
Description: US-169 & I-44 Interchange
Horizontal Alignment Name: I44
Description: A002
Style: Default

	STATION	NORTHING	EASTING
Element: Linear			
POB (1011)	585+95.31	419510.73	2597896.12
POE (1017)	636+16.08	422891.66	2601607.92
Tangent Direction:	N 47°40'15.1037" E		
Tangent Length:	5020.7702		

Project Name: SWO4430
Description: US-169 & I-44 Interchange
Horizontal Alignment Name: 169 RAMP A
Description:
Style: Default

	STATION	NORTHING	EASTING
Element: Linear			
POB (1108)	158+31.34	419564.17	2600218.52
PC (1109)	159+13.19	419645.91	2600214.20
Tangent Direction:	N 3°01'19.2639" W		
Tangent Length:	81.8501		
Element: Circular			
PC (1109)	159+13.19	419645.91	2600214.20
PI (1110)	160+09.07	419741.65	2600209.15
CC ( )		419676.11	2600786.35
PT (1111)	161+03.19	419833.83	2600235.54
Radius:	572.9480		
Delta:	19°00'00.9666" Right		
Degree of Curvature(Arc):	10°00'00.6129"		
Length:	189.9995		
Tangent:	95.8800		
Chord:	189.1301		
Middle Ordinate:	7.8579		
External:	7.9671		
Tangent Direction:	N 3°01'19.2639" W		
Radial Direction:	N 86°58'40.7361" E		
Chord Direction:	N 6°28'41.2194" E		
Radial Direction:	S 74°01'18.2973" E		
Tangent Direction:	N 15°58'41.7027" E		
Element: Linear			
PT (1111)	161+03.19	419833.83	2600235.54
PC (1112)	163+90.59	420110.12	2600314.65
Tangent Direction:	N 15°58'41.7027" E		
Tangent Length:	287.3958		
Element: Circular			
PC (1112)	163+90.59	420110.12	2600314.65
PI (1119)	164+86.47	420202.30	2600341.05
CC ( )		420267.84	2599763.84
PT (1113)	165+80.58	420298.04	2600335.99
Radius:	572.9480		
Delta:	19°00'00.9666" Left		
Degree of Curvature(Arc):	10°00'00.6129"		
Length:	189.9995		
Tangent:	95.8800		
Chord:	189.1301		
Middle Ordinate:	7.8579		
External:	7.9671		
Tangent Direction:	N 15°58'41.7027" E		
Radial Direction:	S 74°01'18.2973" E		
Chord Direction:	N 6°28'41.2194" E		
Radial Direction:	N 86°58'40.7361" E		
Tangent Direction:	N 3°01'19.2639" W		

PLS	DMM	
DRAWN	ARR	
CHECKED	DMM	
APPROVED	DMM	
CREW	GES, INC.	

OKLAHOMA DEPARTMENT OF TRANSPORTATION
SURVEY DIVISION

SURVEY DATA SHEET

SWO 4430(I) PROJECT NO. 10981(04) SHEET NO. S005

OKLAHOMA DEPARTMENT OF TRANSPORTATION					
FED. ROAD DIST. NO.	STATE	PROJ. NO.	FISCAL YEAR	SHEET NO.	TOTAL SHEETS
	OKLA.				

DESCRIPTION	REVISIONS	DATE

Project Name: SWO4430
Description: US-169 & I-44 Interchange
Horizontal Alignment Name: 169 RAMP B
Description:
Style: Default

	STATION	NORTHING	EASTING
Element: Linear			
POB (1114)	158+19.03	419574.24	2600642.58
PC (1115)	159+13.19	419668.26	2600637.61
Tangent Direction:	N 3°01'19.2639" W		
Tangent Length:	94.1557		
Element: Circular			
PC (1115)	159+13.19	419668.26	2600637.61
PI (1120)	160+09.07	419764.01	2600632.56
CC ( )		419638.05	2600065.46
PT (1116)	161+03.19	419852.89	2600596.61
Radius:	572.9480		
Delta:	19°00'00.9666" Left		
Degree of Curvature(Arc):	10°00'00.6129"		
Length:	189.9995		
Tangent:	95.8800		
Chord:	189.1301		
Middle Ordinate:	7.8579		
External:	7.9671		
Tangent Direction:	N 3°01'19.2639" W		
Radial Direction:	N 86°58'40.7361" E		
Chord Direction:	N 12°31'19.7472" W		
Radial Direction:	N 67°58'39.7695" E		
Tangent Direction:	N 22°01'20.2305" W		
Element: Linear			
PT (1116)	161+03.19	419852.89	2600596.61
PC (1117)	163+90.58	420119.32	2600488.84
Tangent Direction:	N 22°01'20.2305" W		
Tangent Length:	287.3958		
Element: Circular			
PC (1117)	163+90.58	420119.32	2600488.84
PI (1121)	164+86.46	420208.20	2600452.89
CC ( )		420334.16	2601019.99
PT (1118)	165+80.58	420303.95	2600447.84
Radius:	572.9480		
Delta:	19°00'00.9666" Right		
Degree of Curvature(Arc):	10°00'00.6129"		
Length:	189.9995		
Tangent:	95.8800		
Chord:	189.1301		
Middle Ordinate:	7.8579		
External:	7.9671		
Tangent Direction:	N 22°01'20.2305" W		
Radial Direction:	N 67°58'39.7695" E		
Chord Direction:	N 12°31'19.7472" W		
Radial Direction:	N 86°58'40.7361" E		
Tangent Direction:	N 3°01'19.2639" W		

Project Name: SWO4430
Description: US-169 & I-44 Interchange
Horizontal Alignment Name: RAMP A
Description:
Style: Default

	STATION	NORTHING	EASTING
Element: Circular			
PC (1023)	0+00.00	420712.47	2600336.13
PI (1087)	2+10.05	420922.23	2600315.06
CC (1022)		420696.83	2600029.91
PT (1021)	3+65.54	420981.44	2600113.52
Radius:	296.6364		
Delta:	70°36'18.2605" Left		
Degree of Curvature(Arc):	19°18'54.5543"		
Length:	365.5424		
Tangent:	210.0500		
Chord:	342.8487		
Middle Ordinate:	54.5479		
External:	66.8387		
Tangent Direction:	N 3°01'19.2639" W		
Radial Direction:	N 86°58'40.7361" E		
Chord Direction:	N 38°19'28.3942" W		
Radial Direction:	N 16°22'22.4756" E		
Tangent Direction:	N 73°37'37.5244" W		
Element: Linear			
PT (1021)	3+65.54	420981.44	2600113.52
PC (1020)	5+06.66	421021.22	2599978.13
Tangent Direction:	N 73°37'37.5244" W		
Tangent Length:	141.1209		
Element: Circular			
PC (1020)	5+06.66	421021.22	2599978.13
PI (1086)	7+25.67	421082.96	2599768.00
CC (1019)		420647.56	2599868.34
PT (1018)	9+05.68	420935.48	2599608.09
Radius:	389.4582		
Delta:	58°42'07.3715" Left		
Degree of Curvature(Arc):	14°42'41.9940"		
Length:	399.0170		
Tangent:	219.0100		
Chord:	381.7927		
Middle Ordinate:	49.9935		
External:	57.3562		
Tangent Direction:	N 73°37'37.5244" W		
Radial Direction:	N 16°22'22.4756" E		
Chord Direction:	S 77°01'18.7699" W		
Radial Direction:	N 42°19'44.8958" W		
Tangent Direction:	S 47°40'15.1042" W		

Project Name: SWO4430
Description: US-169 & I-44 Interchange
Horizontal Alignment Name: RAMP B
Description:
Style: Default

	STATION	NORTHING	EASTING
Element: Circular			
PC (1024)	0+00.00	421216.40	2600287.51
CC (1025)		421207.96	2600127.74
PT (1026)	6+44.21	421326.25	2600020.00
Radius:	159.9988		
Delta:	230°41'34.6584" Right		
Degree of Curvature(Arc):	35°48'36.4486"		
Length:	644.2116		
Tangent:	-1.0000		
Chord:	289.1933		
Middle Ordinate:	-1.0000		
External:	-1.0000		
Tangent Direction:	S 3°01'19.5542" E		
Radial Direction:	S 86°58'40.4458" W		
Chord Direction:	N 67°40'32.2250" W		
Radial Direction:	S 42°19'44.8958" E		
Tangent Direction:	N 47°40'15.1042" E		

PLS	DMM	
DRAWN	ARR	
CHECKED	DMM	
APPROVED	DMM	
CREW	GES, INC.	

OKLAHOMA DEPARTMENT OF TRANSPORTATION
SURVEY DIVISION

SURVEY DATA SHEET

SWO 4430(I) PROJECT NO. 10981(04) SHEET NO. S006

OKLAHOMA DEPARTMENT OF TRANSPORTATION					
FED. ROAD DIST. NO.	STATE	PROJ. NO.	FISCAL YEAR	SHEET NO.	TOTAL SHEETS
	OKLA.				

DESCRIPTION	REVISIONS	DATE

Project Name: SWO4430
Description: US-169 & I-44 Interchange
Horizontal Alignment Name: RAMP C
Description:
Style: Default

	STATION	NORTHING	EASTING
Element: Circular			
PC (1027)	0+00.00	420819.37	2600408.61
PI (1088)	3+30.80	421149.71	2600391.17
CC (1028)		420849.57	2600980.78
PT (1029)	6+00.00	421329.98	2600668.54
Radius:	572.9624		
Delta:	60°00'00.0000" Right		
Degree of Curvature(Arc):	9°59'59.7102"		
Length:	600.0048		
Tangent:	330.8000		
Chord:	572.9624		
Middle Ordinate:	76.7624		
External:	88.6376		
Tangent Direction:	N 3°01'19.5542" W		
Radial Direction:	N 86°58'40.4458" E		
Chord Direction:	N 26°58'40.4458" E		
Radial Direction:	S 33°01'19.5542" E		
Tangent Direction:	N 56°58'40.4458" E		
Element: Linear			
PT (1029)	6+00.00	421329.98	2600668.54
PC (1030)	6+03.16	421331.70	2600671.18
Tangent Direction:	N 56°58'40.4458" E		
Tangent Length:	3.1513		
Element: Circular			
PC (1030)	6+03.16	421331.70	2600671.18
PI (1089)	8+21.58	421450.73	2600854.32
CC (1031)		421571.90	2600515.06
PT (1032)	9+76.39	421658.85	2600788.02
Radius:	286.4785		
Delta:	74°38'49.3416" Left		
Degree of Curvature(Arc):	20°00'00.1119"		
Length:	373.2346		
Tangent:	218.4240		
Chord:	347.3923		
Middle Ordinate:	58.6637		
External:	73.7700		
Tangent Direction:	N 56°58'40.4458" E		
Radial Direction:	S 33°01'19.5542" E		
Chord Direction:	N 19°39'15.7750" E		
Radial Direction:	N 72°19'51.1042" E		
Tangent Direction:	N 17°40'08.8958" W		
Element: Linear			
PT (1032)	9+76.39	421658.85	2600788.02
PC (1033)	11+19.76	421795.45	2600744.51
Tangent Direction:	N 17°40'08.8958" W		
Tangent Length:	143.3670		

Element: Circular			
PC (1033)	11+19.76	421795.45	2600744.51
PI (1090)	12+94.71	421962.16	2600691.40
CC (1034)		421878.26	2601004.47
PT (1035)	14+30.90	422079.97	2600820.75
Radius:	272.8377		
Delta:	65°20'24.0000" Right		
Degree of Curvature(Arc):	20°59'59.8281"		
Length:	311.1436		
Tangent:	174.9570		
Chord:	294.5553		
Middle Ordinate:	43.1647		
External:	51.2770		
Tangent Direction:	N 17°40'08.8958" W		
Radial Direction:	N 72°19'51.1042" E		
Chord Direction:	N 15°00'03.1042" E		
Radial Direction:	S 42°19'44.8958" E		
Tangent Direction:	N 47°40'15.1042" E		

Project Name: SWO4430
Description: US-169 & I-44 Interchange
Horizontal Alignment Name: RAMP D
Description:
Style: Default

	STATION	NORTHING	EASTING
Element: Circular			
PC (1043)	0+00.00	421529.22	2600383.15
PI (1091)	5+29.10	421000.85	2600410.89
CC (1042)		421537.61	2600542.93
PCC (1041)	4+08.68	421456.05	2600680.59
Radius:	159.9990		
Delta:	146°20'58.3100" Left		
Degree of Curvature(Arc):	35°48'36.2977"		
Length:	408.6825		
Tangent:	529.1000		
Chord:	306.2996		
Middle Ordinate:	113.6868		
External:	392.7636		
Tangent Direction:	S 3°00'16.1743" E		
Radial Direction:	S 86°59'43.8257" W		
Chord Direction:	S 76°10'45.3293" E		
Radial Direction:	S 59°21'14.4843" E		
Tangent Direction:	N 30°38'45.5157" E		
Element: Circular			
PCC (1041)	4+08.68	421456.05	2600680.59
PI (1092)	5+46.12	421574.29	2600750.64
CC (1040)		421557.99	2600508.52
PT (1039)	6+49.51	421682.08	2600665.37
Radius:	199.9947		
Delta:	68°59'41.1115" Left		
Degree of Curvature(Arc):	28°38'55.1277"		
Length:	240.8308		
Tangent:	137.4391		
Chord:	226.5414		
Middle Ordinate:	35.1686		
External:	42.6725		
Tangent Direction:	N 30°38'45.5157" E		
Radial Direction:	S 59°21'14.4843" E		
Chord Direction:	N 3°51'05.0401" W		
Radial Direction:	N 51°39'04.4042" E		
Tangent Direction:	N 38°20'55.5958" W		
Element: Linear			
PT (1039)	6+49.51	421682.08	2600665.37
PC (1038)	6+49.93	421682.41	2600665.11
Tangent Direction:	N 38°20'55.5959" W		
Tangent Length:	0.4198		
Element: Circular			
PC (1038)	6+49.93	421682.41	2600665.11
PI (1093)	8+21.45	421816.92	2600558.69
CC (1037)		421583.14	2600539.63

PLS	DMM	
DRAWN	ARR	
CHECKED	DMM	
APPROVED	DMM	
CREW	GES, INC.	

OKLAHOMA DEPARTMENT OF TRANSPORTATION
SURVEY DIVISION

SURVEY DATA SHEET

SWO 4430(1) PROJECT NO. 10981(04) SHEET NO. S007

OKLAHOMA DEPARTMENT OF TRANSPORTATION					
FED. ROAD DIST. NO.	STATE	PROJ. NO.	FISCAL YEAR	SHEET NO.	TOTAL SHEETS
	OKLA.				

DESCRIPTION	REVISIONS	DATE

PT (1036)	9+12.38	421701.42	2600431.89
Radius:	160.0000		
Delta:	93°58'49.3000" Left		
Degree of Curvature(Arc):	35°48'35.5414"		
Length:	262.4426		
Tangent:	171.5200		
Chord:	233.9957		
Middle Ordinate:	50.8602		
External:	74.5615		
Tangent Direction:	N 38°20'55.5958" W		
Radial Direction:	N 51°39'04.4042" E		
Chord Direction:	N 85°20'20.2458" W		
Radial Direction:	N 42°19'44.8958" W		
Tangent Direction:	S 47°40'15.1042" W		

Project Name: SWO4430
Description: US-169 & I-44 Interchange
Horizontal Alignment Name: RAMP E
Description:
Style: Default

	STATION	NORTHING	EASTING
Element: Circular			
PC (1044)	0+00.00	422215.62	2600346.92
CC (1045)		422224.05	2600505.69
PT (1046)	6+44.21	422105.77	2600614.43
Radius:	159.9988		
Delta:	230°41'34.6584" Right		
Degree of Curvature(Arc):	35°48'36.4350"		
Length:	644.2116		
Tangent:	-1.0000		
Chord:	289.1933		
Middle Ordinate:	-1.0000		
External:	-1.0000		
Tangent Direction:	N 3°01'19.5542" W		
Radial Direction:	N 86°58'40.4458" E		
Chord Direction:	S 67°40'32.2250" E		
Radial Direction:	N 42°19'44.8958" W		
Tangent Direction:	S 47°40'15.1042" W		

Project Name: SWO4430
Description: US-169 & I-44 Interchange
Horizontal Alignment Name: RAMP F
Description:
Style: Default

	STATION	NORTHING	EASTING
Element: Circular			
PC (1047)	0+00.00	422388.83	2600951.93
PI (1104)	1+34.10	422298.53	2600852.79
CC (1048)		422529.61	2600823.70
PT (1049)	2+33.67	422361.44	2600734.36
Radius:	190.4258		
Delta:	70°18'25.3416" Right		
Degree of Curvature(Arc):	30°05'17.6729"		
Length:	233.6695		
Tangent:	134.0994		
Chord:	219.2826		
Middle Ordinate:	34.7313		
External:	42.4790		
Tangent Direction:	S 47°40'15.1042" W		
Radial Direction:	N 42°19'44.8958" W		
Chord Direction:	S 82°49'21.7750" W		
Radial Direction:	N 27°58'40.4458" E		
Tangent Direction:	N 62°01'19.5542" W		
Element: Linear			
PT (1049)	2+33.67	422361.44	2600734.36
PC (1050)	3+83.86	422431.89	2600601.73
Tangent Direction:	N 62°01'19.5542" W		
Tangent Length:	150.1880		
Element: Circular			
PC (1050)	3+83.86	422431.89	2600601.73
PI (1103)	7+08.02	422583.97	2600315.45
CC (1051)		422937.88	2600870.52
PT (1052)	9+73.85	422907.68	2600298.36
Radius:	572.9509		
Delta:	59°00'00.0000" Right		
Degree of Curvature(Arc):	10°00'00.4357"		
Length:	589.9929		
Tangent:	324.1600		
Chord:	564.2690		
Middle Ordinate:	74.2798		
External:	85.3442		
Tangent Direction:	N 62°01'19.5542" W		
Radial Direction:	N 27°58'40.4458" E		
Chord Direction:	N 32°31'18.5542" W		
Radial Direction:	N 86°58'40.4458" E		
Tangent Direction:	N 3°01'19.5542" W		

PLS	DMM	
DRAWN	ARR	
CHECKED	DMM	
APPROVED	DMM	
CREW	GES, INC.	

OKLAHOMA DEPARTMENT OF TRANSPORTATION
SURVEY DIVISION

SURVEY DATA SHEET

SWO 4430(I) PROJECT NO. 10981(04) SHEET NO. S008

OKLAHOMA DEPARTMENT OF TRANSPORTATION					
FED. ROAD DIST. NO.	STATE	PROJ. NO.	FISCAL YEAR	SHEET NO.	TOTAL SHEETS
	OKLA.				

DESCRIPTION	REVISIONS	DATE

Project Name: SWO4430
Description: US-169 & I-44 Interchange
Horizontal Alignment Name: RAMP F COLLECTOR ROAD
Description:
Style: Default

	STATION	NORTHING	EASTING
Element: Circular			
PC (1047)	23+16.20	422388.83	2600951.93
PI (1105)	24+59.89	422485.59	2601058.16
CC (1082)		420976.88	2602238.01
PRC (1083)	26+03.04	422565.36	2601177.67
Radius:	1909.8712		
Delta:	8°36'19.0000" Right		
Degree of Curvature(Arc):	2°59'59.9327"		
Length:	286.8444		
Tangent:	143.6924		
Chord:	286.5749		
Middle Ordinate:	5.3626		
External:	5.3978		
Tangent Direction:	N 47°40'15.1042" E		
Radial Direction:	S 42°19'44.8958" E		
Chord Direction:	N 51°58'24.6042" E		
Radial Direction:	S 33°43'25.8958" E		
Tangent Direction:	N 56°16'34.1042" E		
Element: Circular			
PRC (1083)	26+03.04	422565.36	2601177.67
PI (1106)	27+46.73	422645.14	2601297.18
CC (1084)		424153.82	2600117.35
PT (1085)	28+89.88	422741.90	2601403.41
Radius:	1909.8393		
Delta:	8°36'19.0000" Left		
Degree of Curvature(Arc):	3°00'00.1130"		
Length:	286.8396		
Tangent:	143.6900		
Chord:	286.5701		
Middle Ordinate:	5.3825		
External:	5.3978		
Tangent Direction:	N 56°16'34.1042" E		
Radial Direction:	S 33°43'25.8958" E		
Chord Direction:	N 51°58'24.6042" E		
Radial Direction:	S 42°19'44.8958" E		
Tangent Direction:	N 47°40'15.1042" E		

Project Name: SWO4430
Description: US-169 & I-44 Interchange
Horizontal Alignment Name: RAMP F-1
Description:
Style: Default

	STATION	NORTHING	EASTING
Element: Linear			
POB (1053)	0+00.00	422462.89	2600974.81
PC (1054)	0+12.91	422454.19	2600965.27
Tangent Direction:	S 47°40'15.1037" W		
Tangent Length:	12.9100		
Element: Circular			
PC (1054)	0+12.91	422454.19	2600965.27
PI (1107)	2+14.97	422318.13	2600815.89
CC (1048)		422666.32	2600772.05
PT (1056)	3+65.00	422412.92	2600637.44
Radius:	286.9322		
Delta:	70°18'25.3421" Right		
Degree of Curvature(Arc):	19°58'06.2531"		
Length:	352.0914		
Tangent:	202.0600		
Chord:	330.4135		
Middle Ordinate:	52.3329		
External:	64.0070		
Tangent Direction:	S 47°40'15.1037" W		
Radial Direction:	N 42°19'44.8963" W		
Chord Direction:	S 82°49'27.7747" W		
Radial Direction:	N 27°58'40.4458" E		
Tangent Direction:	N 62°01'19.5542" W		

Project Name: SWO4430
Description: US-169 & I-44 Interchange
Horizontal Alignment Name: RAMP G
Description:
Style: Default

	STATION	NORTHING	EASTING
Element: Circular			
PC (1075)	0+00.00	421172.87	2599608.07
PI (1094)	2+39.32	421334.03	2599784.99
CC (1074)		421596.45	2599222.24
PT (1073)	4+53.40	421573.15	2599794.73
Radius:	572.9577		
Delta:	45°20'24.0000" Left		
Degree of Curvature(Arc):	10°00'00.0030"		
Length:	453.4000		
Tangent:	239.3210		
Chord:	441.6621		
Middle Ordinate:	44.2667		
External:	47.9731		
Tangent Direction:	N 47°40'15.1037" E		
Radial Direction:	S 42°19'44.8963" E		
Chord Direction:	N 25°00'03.1037" E		
Radial Direction:	S 87°40'08.8963" E		
Tangent Direction:	N 2°19'51.1037" E		
Element: Linear			
PT (1073)	4+53.40	421573.15	2599794.73
PC (1072)	6+03.89	421723.52	2599800.85
Tangent Direction:	N 2°19'51.1037" E		
Tangent Length:	150.4946		
Element: Circular			
PC (1072)	6+03.89	421723.52	2599800.85
PI (1095)	8+27.55	421946.99	2599809.94
CC (1071)		421700.22	2600373.33
PT (1070)	10+30.37	422105.21	2599968.03
Radius:	572.9567		
Delta:	42°38'49.6745" Right		
Degree of Curvature(Arc):	10°00'00.0899"		
Length:	426.4705		
Tangent:	223.6580		
Chord:	416.6935		
Middle Ordinate:	39.2236		
External:	42.1061		
Tangent Direction:	N 2°19'51.1037" E		
Radial Direction:	S 87°40'08.8963" E		
Chord Direction:	N 23°39'15.9409" E		
Radial Direction:	S 45°01'15.2218" E		
Tangent Direction:	N 44°58'40.7782" E		
Element: Linear			
PT (1070)	10+30.37	422105.21	2599968.03
PC (1069)	11+04.12	422157.38	2600020.17
Tangent Direction:	N 44°58'40.7782" E		
Tangent Length:	73.7568		

PLS	DMM	
DRAWN	ARR	
CHECKED	DMM	
APPROVED	DMM	
CREW	GES, INC.	

OKLAHOMA DEPARTMENT OF TRANSPORTATION
SURVEY DIVISION

SURVEY DATA SHEET

SWO 4430(I) PROJECT NO. 10981(04) SHEET NO. S009

OKLAHOMA DEPARTMENT OF TRANSPORTATION					
FED. ROAD DIST. NO.	STATE	PROJ. NO.	FISCAL YEAR	SHEET NO.	TOTAL SHEETS
	OKLA.				

DESCRIPTION	REVISIONS	DATE

Element: Circular			
PC (1069)	11+04.12	422157.38	2600020.17
PI (1096)	12+68.41	422273.60	2600136.30
CC (1068)		422562.37	2599614.87
PCC (1067)	14+24.12	422433.69	2600173.19
Radius:	572.9578		
Delta:	32°00'00.0000" Left		
Degree of Curvature(Arc):	10°00'00.0009"		
Length:	320.0000		
Tangent:	164.2930		
Chord:	315.8571		
Middle Ordinate:	22.1954		
External:	23.0899		
Tangent Direction:	N 44°58'40.7782" E		
Radial Direction:	S 45°01'19.2218" E		
Chord Direction:	N 28°58'40.7782" E		
Radial Direction:	S 77°01'19.2218" E		
Tangent Direction:	N 12°58'40.7782" E		
Element: Circular			
PCC (1067)	14+24.12	422433.69	2600173.19
PI (1097)	16+48.99	422652.82	2600223.69
CC (1066)		422793.02	2598614.03
PT (1065)	18+70.94	422877.38	2600211.84
Radius:	1600.0332		
Delta:	16°00'00.0000" Left		
Degree of Curvature(Arc):	3°34'51.2830"		
Length:	446.8136		
Tangent:	224.8700		
Chord:	445.3632		
Middle Ordinate:	15.5714		
External:	15.7244		
Tangent Direction:	N 12°58'40.7782" E		
Radial Direction:	S 77°01'19.2218" E		
Chord Direction:	N 4°58'40.7782" E		
Radial Direction:	N 86°58'40.7782" E		
Tangent Direction:	N 3°01'19.2218" W		

Project Name: SWO4430
Description: US-169 & I-44 Interchange
Horizontal Alignment Name: RAMP G COLLECTOR ROAD
Description:
Style: Default

	STATION	NORTHING	EASTING
Element: Circular			
PC (1081)	0+00.00	420799.60	2599271.03
PI (1098)	1+10.34	420873.90	2599352.60
CC (1080)		421646.76	2598489.38
PT (1079)	2+20.00	420962.40	2599418.50
Radius:	1145.9160		
Delta:	11°00'00.0000" Left		
Degree of Curvature(Arc):	4°59'59.9936"		
Length:	220.0001		
Tangent:	110.3392		
Chord:	219.6624		
Middle Ordinate:	5.2756		
External:	5.3000		
Tangent Direction:	N 47°40'15.1037" E		
Radial Direction:	S 42°19'44.8963" E		
Chord Direction:	N 42°10'15.1037" E		
Radial Direction:	S 53°19'44.8963" E		
Tangent Direction:	N 36°40'15.1037" E		
Element: Linear			
PT (1079)	2+20.00	420962.40	2599418.50
PC (1078)	2+56.12	420991.37	2599440.07
Tangent Direction:	N 36°40'15.1037" E		
Tangent Length:	36.1200		
Element: Circular			
PC (1078)	2+56.12	420991.37	2599440.07
PI (1099)	3+66.46	421079.87	2599505.96
CC (1077)		420307.01	2600359.18
PT (1076)	4+76.12	421154.17	2599587.54
Radius:	1145.9160		
Delta:	11°00'00.0000" Right		
Degree of Curvature(Arc):	4°59'59.9936"		
Length:	220.0001		
Tangent:	110.3392		
Chord:	219.6624		
Middle Ordinate:	5.2756		
External:	5.3000		
Tangent Direction:	N 36°40'15.1037" E		
Radial Direction:	S 53°19'44.8963" E		
Chord Direction:	N 42°10'15.1037" E		
Radial Direction:	S 42°19'44.8963" E		
Tangent Direction:	N 47°40'15.1037" E		
Element: Linear			
PT (1076)	4+76.12	421154.17	2599587.54
POE (1075)	5+03.89	421172.87	2599608.07
Tangent Direction:	N 47°40'15.1037" E		
Tangent Length:	27.7700		

Project Name: SWO4430
Description: US-169 & I-44 Interchange
Horizontal Alignment Name: RAMP H
Description:
Style: Default

	STATION	NORTHING	EASTING
Element: Circular			
PC (1057)	0+00.00	421731.70	2600203.76
PI (1100)	1+77.72	421612.02	2600072.37
CC (1058)		421849.98	2600096.02
PT (1059)	2+68.10	421755.21	2599967.11
Radius:	159.9930		
Delta:	96°00'34.3100" Right		
Degree of Curvature(Arc):	35°48'41.1083"		
Length:	268.0975		
Tangent:	177.7200		
Chord:	237.8138		
Middle Ordinate:	52.9467		
External:	79.1349		
Tangent Direction:	S 47°40'15.1042" W		
Radial Direction:	N 42°19'44.8958" W		
Chord Direction:	N 84°19'27.7408" W		
Radial Direction:	N 53°40'49.4142" E		
Tangent Direction:	N 36°19'10.5858" W		
Element: Linear			
PT (1059)	2+68.10	421755.21	2599967.11
PC (1060)	2+72.20	421758.52	2599964.68
Tangent Direction:	N 36°19'10.5858" W		
Tangent Length:	4.0977		
Element: Circular			
PC (1060)	2+72.20	421758.52	2599964.68
PI (1101)	4+02.63	421863.61	2599887.42
CC (1061)		421875.35	2600123.62
PCC (1062)	5+02.69	421975.85	2599953.88
Radius:	197.2636		
Delta:	66°56'52.7216" Right		
Degree of Curvature(Arc):	29°02'43.0144"		
Length:	230.4952		
Tangent:	130.4372		
Chord:	217.6048		
Middle Ordinate:	32.7189		
External:	39.2249		
Tangent Direction:	N 36°19'10.5858" W		
Radial Direction:	N 53°40'49.4142" E		
Chord Direction:	N 2°50'44.2250" W		
Radial Direction:	S 59°22'17.8642" E		
Tangent Direction:	N 30°37'42.1358" E		
Element: Circular			
PCC (1062)	5+02.69	421975.85	2599953.88
PI (1102)	10+31.69	422431.05	2600223.39
CC (1063)		421894.35	2600091.53

PLS	DMM	
DRAWN	ARR	
CHECKED	DMM	
APPROVED	DMM	
CREW	GES, INC.	

OKLAHOMA DEPARTMENT OF TRANSPORTATION
SURVEY DIVISION

SURVEY DATA SHEET

SWO 4430(I) PROJECT NO. 10981(04) SHEET NO. S010

OKLAHOMA DEPARTMENT OF TRANSPORTATION					
FED. ROAD DIST. NO.	STATE	PROJ. NO.	FISCAL YEAR	SHEET NO.	TOTAL SHEETS
	OKLA.				

DESCRIPTION	REVISIONS	DATE

PT (1064)	9+11.30	421902.79	2600251.28
Radius:	159.9688		
Delta:	146°20'58.3100" Right		
Degree of Curvature(Arc):	35°49'00.6675"		
Length:	408.6052		
Tangent:	529.0000		
Chord:	306.2417		
Middle Ordinate:	113.6653		
External:	392.6894		
Tangent Direction:	N 30°37'42.1358" E		
Radial Direction:	S 59°22'17.8642" E		
Chord Direction:	S 76°11'48.7092" E		
Radial Direction:	S 86°58'40.4458" W		
Tangent Direction:	S 3°01'19.5542" E		

Project Name: SWO4430
Description:
Horizontal Alignment Name: 169&11 Ramp A
Description:
Style: Default

	STATION	NORTHING	EASTING
Element: Circular			
PC (1128)	200+44.05	423757.11	2600153.38
PI (1136)	203+12.48	424025.16	2600139.22
CC (1127)		423656.41	2598246.05
PT (1126)	205+77.42	424278.93	2600051.73
Radius:	1909.9787		
Delta:	16°00'00.0000" Left		
Degree of Curvature(Arc):	2°59'59.3250"		
Length:	533.3667		
Tangent:	268.4300		
Chord:	531.6353		
Middle Ordinate:	18.5678		
External:	18.7705		
Tangent Direction:	N 3°01'19.5542" W		
Radial Direction:	N 86°58'40.4458" E		
Chord Direction:	N 11°01'19.5542" W		
Radial Direction:	N 70°58'40.4458" E		
Tangent Direction:	N 19°01'19.5542" W		
Element: Linear			
PT (1126)	205+77.42	424278.93	2600051.73
PC (1125)	207+94.42	424484.09	2599981.01
Tangent Direction:	N 19°01'19.5542" W		
Tangent Length:	217.0000		
Element: Circular			
PC (1125)	207+94.42	424484.09	2599981.01
PI (1137)	208+74.94	424560.21	2599954.76
CC (1124)		424670.82	2600522.65
PT (1123)	209+54.41	424640.62	2599950.52
Radius:	572.9296		
Delta:	16°00'00.0000" Right		
Degree of Curvature(Arc):	10°00'01.7735"		
Length:	159.9921		
Tangent:	80.5200		
Chord:	159.4728		
Middle Ordinate:	5.5757		
External:	5.6305		
Tangent Direction:	N 19°01'19.5542" W		
Radial Direction:	N 70°58'40.4458" E		
Chord Direction:	N 11°01'19.5542" W		
Radial Direction:	N 86°58'40.4458" E		
Tangent Direction:	N 3°01'19.5542" W		
Element: Linear			
PT (1123)	209+54.41	424640.62	2599950.52
POE (1122)	211+10.80	424796.79	2599942.27
Tangent Direction:	N 3°01'19.5542" W		
Tangent Length:	156.3888		

Project Name: SWO4430
Description:
Horizontal Alignment Name: 169&11 Ramp B
Description:
Style: Default

	STATION	NORTHING	EASTING
Element: Circular			
PC (1129)	200+44.30	423763.01	2600265.23
PI (1138)	203+12.73	424031.07	2600251.07
CC (1130)		423863.71	2602172.55
PT (1131)	205+77.67	424292.64	2600311.36
Radius:	1909.9787		
Delta:	16°00'00.0000" Right		
Degree of Curvature(Arc):	2°59'59.3250"		
Length:	533.3667		
Tangent:	268.4300		
Chord:	531.6353		
Middle Ordinate:	18.5678		
External:	18.7705		
Tangent Direction:	N 3°01'19.5542" W		
Radial Direction:	N 86°58'40.4458" E		
Chord Direction:	N 4°58'40.4458" E		
Radial Direction:	S 77°01'19.5542" E		
Tangent Direction:	N 12°58'40.4458" E		
Element: Linear			
PT (1131)	205+77.67	424292.64	2600311.36
PC (1132)	207+94.67	424504.10	2600360.09
Tangent Direction:	N 12°58'40.4458" E		
Tangent Length:	217.0000		
Element: Circular			
PC (1132)	207+94.67	424504.10	2600360.09
PI (1139)	208+75.19	424582.56	2600378.17
CC (1133)		424632.76	2599801.79
PT (1134)	209+54.66	424662.97	2600373.93
Radius:	572.9296		
Delta:	16°00'00.0000" Left		
Degree of Curvature(Arc):	10°00'01.7735"		
Length:	159.9921		
Tangent:	80.5200		
Chord:	159.4728		
Middle Ordinate:	5.5757		
External:	5.6305		
Tangent Direction:	N 12°58'40.4458" E		
Radial Direction:	S 77°01'19.5542" E		
Chord Direction:	N 4°58'40.4458" E		
Radial Direction:	N 86°58'40.4458" E		
Tangent Direction:	N 3°01'19.5542" W		
Element: Linear			
PT (1134)	209+54.66	424662.97	2600373.93
POE (1135)	210+98.22	424806.33	2600366.36
Tangent Direction:	N 3°01'19.5542" W		
Tangent Length:	143.5628		

PLS	DMM	
DRAWN	ARR	
CHECKED	DMM	
APPROVED	DMM	
CREW	GES, INC.	

OKLAHOMA DEPARTMENT OF TRANSPORTATION
SURVEY DIVISION

SURVEY DATA SHEET

SWO 4430(1) PROJECT NO. 10981(04) SHEET NO. S011

OKLAHOMA DEPARTMENT OF TRANSPORTATION					
FED. ROAD DIST. NO.	STATE	PROJ. NO.	FISCAL YEAR	SHEET NO.	TOTAL SHEETS
	OKLA.				

DESCRIPTION	REVISIONS	DATE

I-44 & U.S. 169
NORTH TO THE MUSKOGEE COUNTY LINE
TULSA COUNTY

BENCH MARK AND CHECK LEVEL LIST

STATION	DIFF. EL. 1ST RUN	DIFF. EL. 2ND RUN	MEAN DIFF. ELEVATION	UNADJUSTED ELEVATON	ADJUSTED ELEVATION	STATION	OFFSET	DESCRIPTION
U218					648.7900			NGS 3D monument
	14.6570	-14.5540	14.6555					
7401				663.4455	663.4455			A.C. 8.6 sft. E. of the edge of conc. E. side hwy169

STATION	DIFF. EL. 1ST RUN	DIFF. EL. 2ND RUN	MEAN DIFF. ELEVATION	UNADJUSTED ELEVATON	ADJUSTED ELEVATION	STATION	OFFSET	DESCRIPTION
7401/BM1					663.4455			A.C. 8.6 sft. E. of the edge of conc. E. side hwy169
	-12.8480	12.8530	-12.8505					
BM2				650.5950	650.5917	159+16.19	181.88	Cut-sqr on N.E. cor. of conc. pad for traf. sig. box N. of 21st ST
	2.2850	-2.2770	2.2810					
BM3				652.8760	652.8695	166+02.52	-68.96	Ch-sqr. S.W. cor. of conc. footing for 21st ST. sign W. of hwy169
	-5.2830	5.2770	-5.2800					
AT6				647.5960	647.5862	187+80.51	94.08	Ch-x on bolt W. side of L.P. on W. side of hwy169
	-1.4010	1.4040	-1.4025					
BM4				646.1935	646.1804	172+37.87	-96.53	Mag Nail
	-6.3170	6.3170	-6.3170					
BM5				639.8705	639.8601	180+65.72	-120.83	Ch-sqr N.W. side of conc.pad for ODOT cab. N. of I-44, W. of hwy169
	10.8110	-10.8080	10.8095					
BM6				650.6860	650.6664	187+80.51	94.08	Fnd. ch-sqr. on W. side conc. base L.P. E. of hwy169
	-2.3380	2.3430	-2.3405					
BM7				648.3455	648.3226	194+10.99	112.85	36" x 5/8" rb. set at E. top bank o/ ditch E. side of hwy169 +- 500' S. 11th ST.
	3.9330	-3.9330	3.9330					
BM8				652.2785	652.2523	200+67.97	90.77	Ch-sqr S.E. cor. conc. footing for hwy sign E. side hwy169
	-5.9200	5.9230	-5.9215					
BM9				646.3570	646.3275	206+24.20	177.51	36" x 5/8" rb. set 10' W. of fen. E. side of hwy169
	-3.7980	3.7940	-3.7960					
7402/BM10				642.5610	642.5283			A.C. 16.23' N. of N.curb 11th ST. E. side hwy169

Page 1 of4

	-8.8730	8.8770	-8.8750					
V218				633.6860	633.6500			

STATION	DIFF. EL. 1ST RUN	DIFF. EL. 2ND RUN	MEAN DIFF. ELEVATION	UNADJUSTED ELEVATON	ADJUSTED ELEVATION	STATION	OFFSET	DESCRIPTION
BM5					639.8601	618+19.90	-129.29	Ch-sqr N.W. side of conc.pad for ODOT cab. N. of I-44, W. of hwy169
	-1.1310	1.1310	-1.1310					
BM11				638.7291	638.7291	611+85.66	-108.35	Ch-sqr. on curb S. side of W. bound on ramp N. of I-44 W. hwy169
	-4.1270	4.1220	-4.1245					
BM12				634.6046	634.6046	606+78.91	-154.94	Ch-sqr. On N. curb Access road N. of I-44
	4.2820	-4.2970	4.2945					
BM13				638.8991	638.8991	601+22.20	143.98	36" x 5/8" rb. set +- 10' N. of fen. S. side I-44 off ramp
	.7230	-.7240	.7235					
AT4				639.6226	639.6226	598+54.15	109.29	Mag Nail
	-1.9950	1.9970	-1.9960					
BM14				637.6266	637.6266	594+90.02	110.46	36" x 5/8" rb. set CL ditch S. side of I-44
	-2.8570	2.8650	-2.8660					
BM15				634.7606	634.7606	588+50.13	219.01	36" x 5/8" rb. set in center median of 21st ST. S. of I-44

STATION	DIFF. EL. 1ST RUN	DIFF. EL. 2ND RUN	MEAN DIFF. ELEVATION	UNADJUSTED ELEVATON	ADJUSTED ELEVATION	STATION	OFFSET	DESCRIPTION
BM5					639.8601	618+19.90	-129.29	Ch-sqr N.W. side of conc.pad for ODOT cab. N. of I-44, W. of hwy169
	6.0920	-6.0910	6.0915					
BM16				645.9516	645.9516	624+57.36	95.47	Ch-sqr. W. end of wall S of I-44 on ramp E. of hwy169
	4.8220	-4.8230	4.8225					
AT7				650.7741	650.7741	627+29.99	128.89	Mag Nail
	7.6850	-7.6030	7.6040					
BM17				658.3781	658.3781	631+12.90	103.84	Ch-sqr. N. curb of Skelly DR. about CL of 14th place S. of I-44
	5.5820	-5.5000	5.5010					
AT9/BM18				663.8791	663.8791	637+54.58	82.871	(AT9) Mag Nail set N. side Skelly DR. S. of I-44
	-5.0850	5.0850	-5.0850					
BM19				658.7941	658.7941	644+35.94	114.52	Ch-sqr. S.W. cor. curb inlet S. of I-44

STATION	DIFF. EL. 1ST RUN	DIFF. EL. 2ND RUN	MEAN DIFF. ELEVATION	UNADJUSTED ELEVATON	ADJUSTED ELEVATION	STATION	OFFSET	DESCRIPTION
7402					642.5283			A.C. 16.23' N. of N. curb 11th ST. E. side hwy169

Page 2 of4

	-.8250	.8240	-.8245					
AT17				641.7036	641.7036			Mag Nail

STATION	DIFF. EL. 1ST RUN	DIFF. EL. 2ND RUN	MEAN DIFF. ELEVATION	UNADJUSTED ELEVATON	ADJUSTED ELEVATION	STATION	OFFSET	DESCRIPTION
BM18					663.8791			(AT9) Mag Nail set N. side Skelly DR. S. of I-44
	2.6220	-2.6210	2.6215					
AT10				666.5006	666.5006			Mag Nail

STATION	DIFF. EL. 1ST RUN	DIFF. EL. 2ND RUN	MEAN DIFF. ELEVATION	UNADJUSTED ELEVATON	ADJUSTED ELEVATION	STATION	OFFSET	DESCRIPTION
7402					642.5283			A.C. 16.23' N. of N. curb 11th ST. E. side hwy169
	3.9830	-3.9840	3.9835					
AT19				646.5118	646.5118			Mag Nail
	4.3960	-4.3990	4.3975					
AT16				650.9093	650.9093			Mag Nail
	4.0820	-4.0750	4.0785					
AT8				654.9878	654.9878			Mag Nail

STATION	DIFF. EL. 1ST RUN	DIFF. EL. 2ND RUN	MEAN DIFF. ELEVATION	UNADJUSTED ELEVATON	ADJUSTED ELEVATION	STATION	OFFSET	DESCRIPTION
BM11					638.7291			Ch-sqr. on curb S. side of W. bound on ramp N. of I-44 W. hwy169
	-.4980	.4960	-.4970					
AT5				638.2321	638.2321			Mag Nail
	5.2660	-5.2680	5.2670					
AT15				643.4991	643.4991			Mag Nail

STATION	DIFF. EL. 1ST RUN	DIFF. EL. 2ND RUN	MEAN DIFF. ELEVATION	UNADJUSTED ELEVATON	ADJUSTED ELEVATION	STATION	OFFSET	DESCRIPTION
U218					648.7900			NGS 3D monument
	-2.3370	2.3350	-2.3360					
AT14				646.4540	646.4540			Mag Nail

STATION	DIFF. EL. 1ST RUN	DIFF. EL. 2ND RUN	MEAN DIFF. ELEVATION	UNADJUSTED ELEVATON	ADJUSTED ELEVATION	STATION	OFFSET	DESCRIPTION
BM2					650.5917			Cut-sqr on N.E. cor. of conc. pad for traf. sig. box N. of 21st ST

Page 3 of4

	2.7170	-2.7210	2.7190					
AT13				653.3107	653.3107			Mag Nail

STATION	DIFF. EL. 1ST RUN	DIFF. EL. 2ND RUN	MEAN DIFF. ELEVATION	UNADJUSTED ELEVATON	ADJUSTED ELEVATION	STATION	OFFSET	DESCRIPTION
BM2					650.5917			Cut-sqr on N.E. cor. of conc. pad for traf. sig. box N. of 21st ST
	-3.2570	3.2590	-3.2575					
AT11				647.3342	647.3342			Mag Nail

STATION	DIFF. EL. 1ST RUN	DIFF. EL. 2ND RUN	MEAN DIFF. ELEVATION	UNADJUSTED ELEVATON	ADJUSTED ELEVATION	STATION	OFFSET	DESCRIPTION
BM15					634.7606			36" x 5/8" rb. set in center median of 21st ST. S. of I-44
	2.9960	-2.9190	2.9125					
AT2				637.6731	637.6731			5/8" rb. w/ orange plastic cap
	.1440	-.1410	.1425					
AT1				637.8156	637.8156			5/8" rb. w/ orange plastic cap

STATION	DIFF. EL. 1ST RUN	DIFF. EL. 2ND RUN	MEAN DIFF. ELEVATION	UNADJUSTED ELEVATON	ADJUSTED ELEVATION	STATION	OFFSET	DESCRIPTION
BM15					634.7606			36" x 5/8" rb. set in center median of 21st ST. S. of I-44
	3.1940	-3.1830	3.1835					
AT3				637.9441	637.9441			Mag Nail

Page 4 of4

PLS	DMM	
DRAWN	ARR	
CHECKED	DMM	
APPROVED	DMM	
CREW	GES, INC.	

OKLAHOMA DEPARTMENT OF TRANSPORTATION
SURVEY DIVISION

SURVEY DATA SHEET

SWO 44301(1) PROJECT NO. 10981(04) SHEET NO. S012

OKLAHOMA DEPARTMENT OF TRANSPORTATION					
FED. ROAD DIST. NO.	STATE	PROJ. NO.	FISCAL YEAR	SHEET NO.	TOTAL SHEETS
	OKLA.				

DESCRIPTION	REVISIONS	DATE

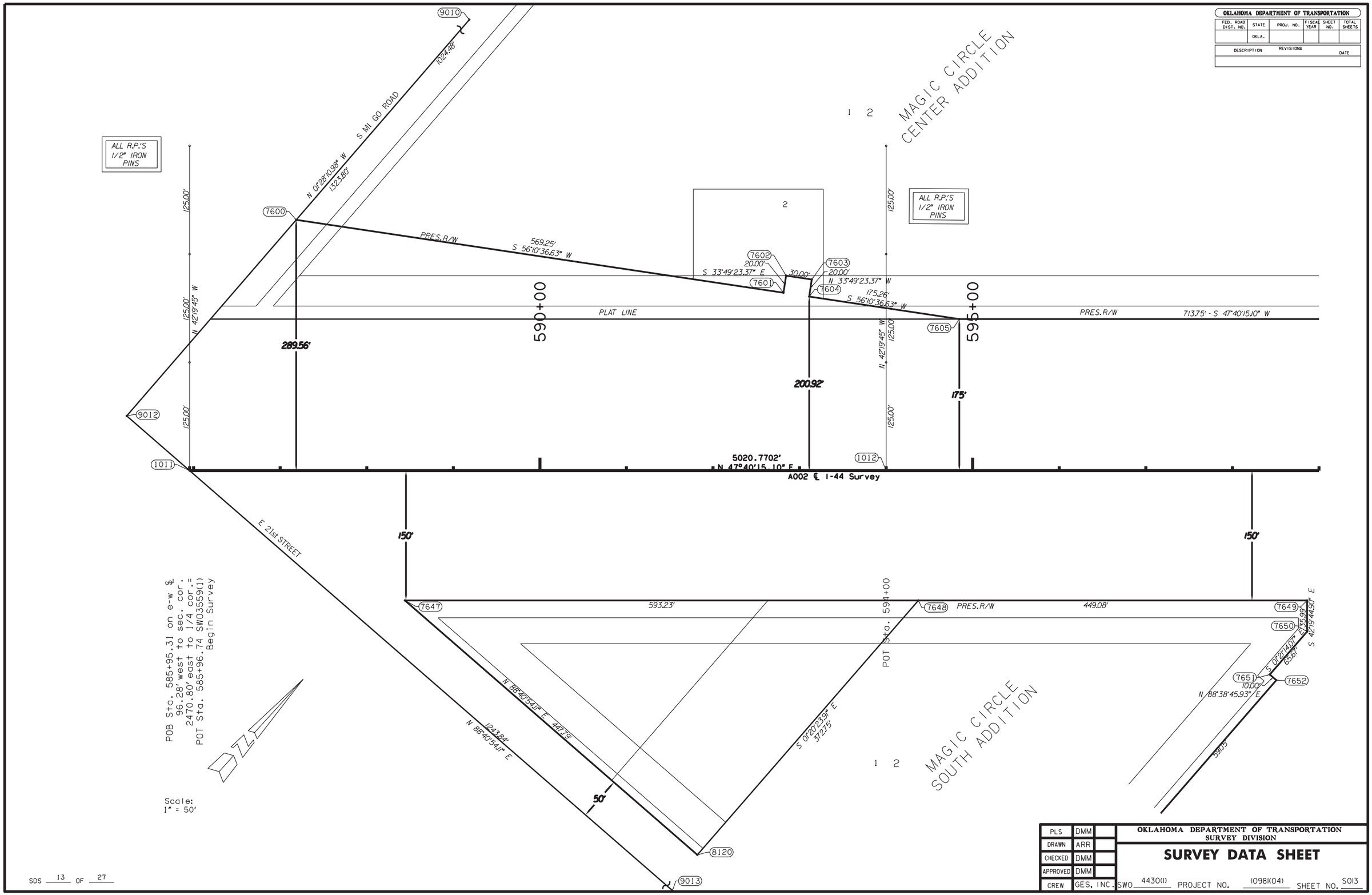

PLS	DMM	
DRAWN	ARR	
CHECKED	DMM	
APPROVED	DMM	
CREW	GES, INC.	

OKLAHOMA DEPARTMENT OF TRANSPORTATION
SURVEY DIVISION

SURVEY DATA SHEET

SWO 4430(1) PROJECT NO. 10981(04) SHEET NO. S013

SDS 13 OF 27

OKLAHOMA DEPARTMENT OF TRANSPORTATION					
FED. ROAD DIST. NO.	STATE	PROJ. NO.	FISCAL YEAR	SHEET NO.	TOTAL SHEETS
	OKLA.				

DESCRIPTION	REVISIONS	DATE

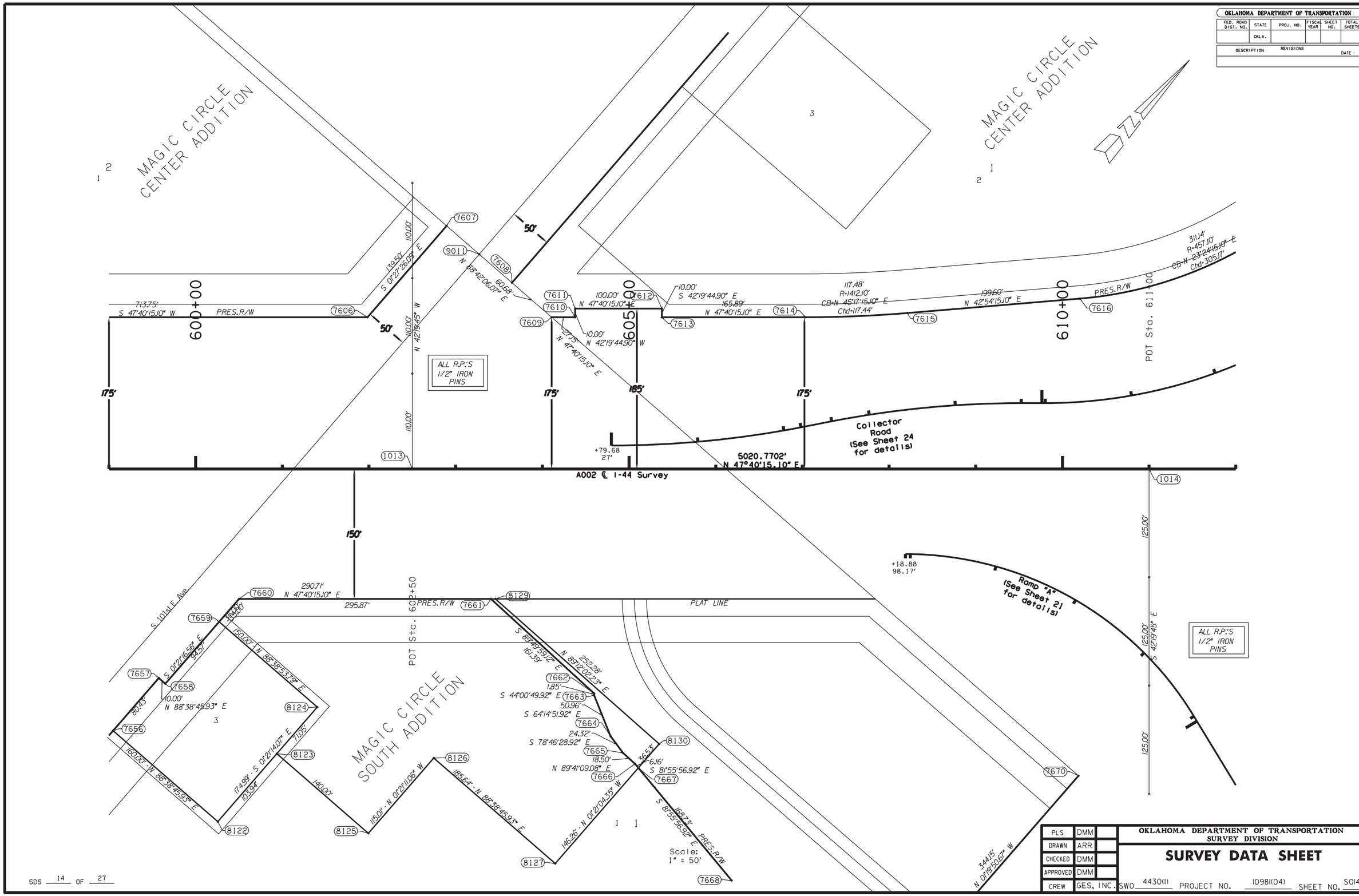

PLS	DMM	
DRAWN	ARR	
CHECKED	DMM	
APPROVED	DMM	
CREW	GES, INC.	

OKLAHOMA DEPARTMENT OF TRANSPORTATION
SURVEY DIVISION

SURVEY DATA SHEET

SWO 4430(1) PROJECT NO. 1098(04) SHEET NO. 5014

OKLAHOMA DEPARTMENT OF TRANSPORTATION					
FED. ROAD DIST. NO.	STATE	PROJ. NO.	FISCAL YEAR	SHEET NO.	TOTAL SHEETS
	OKLA.				

DESCRIPTION	REVISIONS	DATE

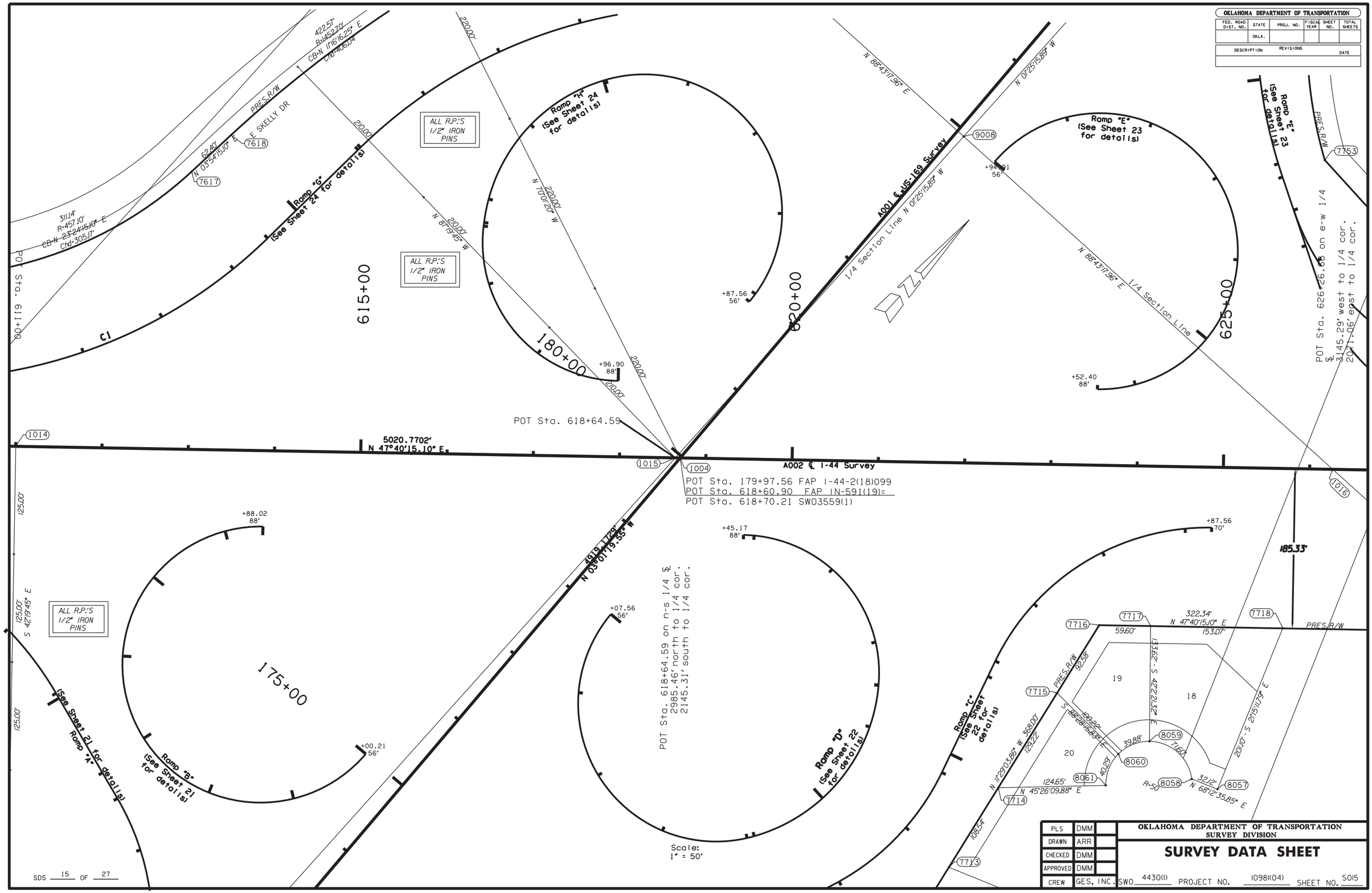

PLS	DMM	
DRAWN	ARR	
CHECKED	DMM	
APPROVED	DMM	
CREW	GES, INC.	

OKLAHOMA DEPARTMENT OF TRANSPORTATION
SURVEY DIVISION

SURVEY DATA SHEET

SWO 44301(1) PROJECT NO. 10981(04) SHEET NO. S015

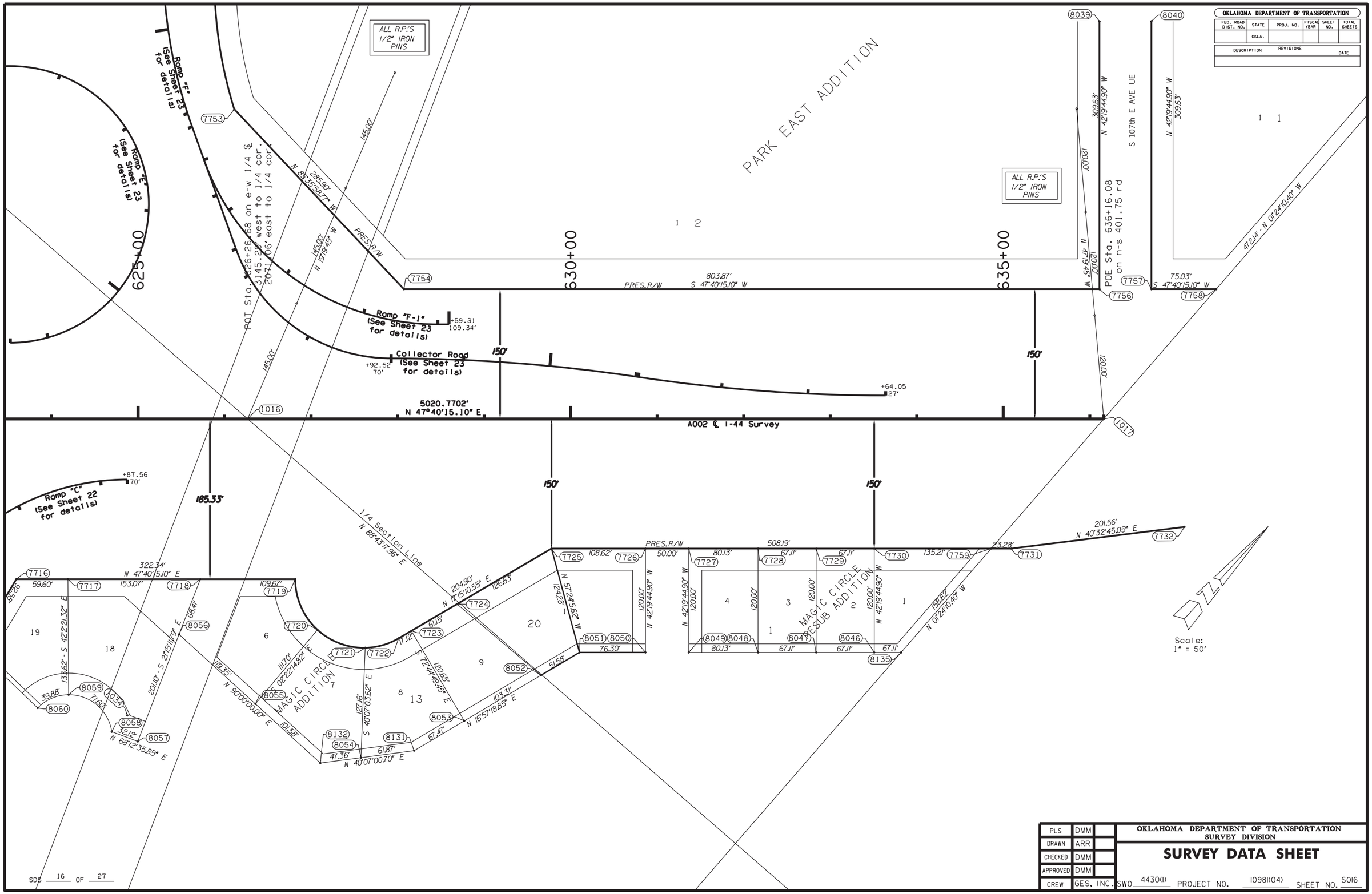
OKLAHOMA DEPARTMENT OF TRANSPORTATION
FED. ROAD DIST. NO.
STATE
OKLA.
PROJ. NO.
FISCAL YEAR
SHEET NO.
TOTAL SHEETS
DESCRIPTION
REVISIONS
DATE
ALL R.P.'S 1/2" IRON PINS
PARK EAST ADDITION
S 107th E AVE UE
POE Sta. 636+16.08 on n-s 401.75 rd
POT Sta. 626+26.68 on e-w 1/4 $, 3145.28' west to 1/4 cor. 2071.06' east to 1/4 cor.
Ramp "F" (See Sheet 23 for details)
Ramp "E" (See Sheet 23 for details)
Ramp "F-1" (See Sheet 23 for details)
Collector Road (See Sheet 23 for details)
Ramp "C" (See Sheet 22 for details)
625+00
630+00
635+00
PRES.R/W
803.87' S 47°40'15.10" W
5020.7702' N 47°40'15.10" E
A002 ℄ I-44 Survey
1/4 Section Line N 88°43'11.96" E
MAGIC CIRCLE ADDITION
MAGIC CIRCLE RESUB ADDITION
Scale: 1" = 50'
SDS 16 OF 27
PLS DMM
DRAWN ARR
CHECKED DMM
APPROVED DMM
CREW GES, INC.
OKLAHOMA DEPARTMENT OF TRANSPORTATION
SURVEY DIVISION
SURVEY DATA SHEET
SWO 44301(1) PROJECT NO. 10981(04) SHEET NO. S016

OKLAHOMA DEPARTMENT OF TRANSPORTATION					
FED. ROAD DIST. NO.	STATE	PROJ. NO.	FISCAL YEAR	SHEET NO.	TOTAL SHEETS
	OKLA.				

REVISIONS	
DESCRIPTION	DATE

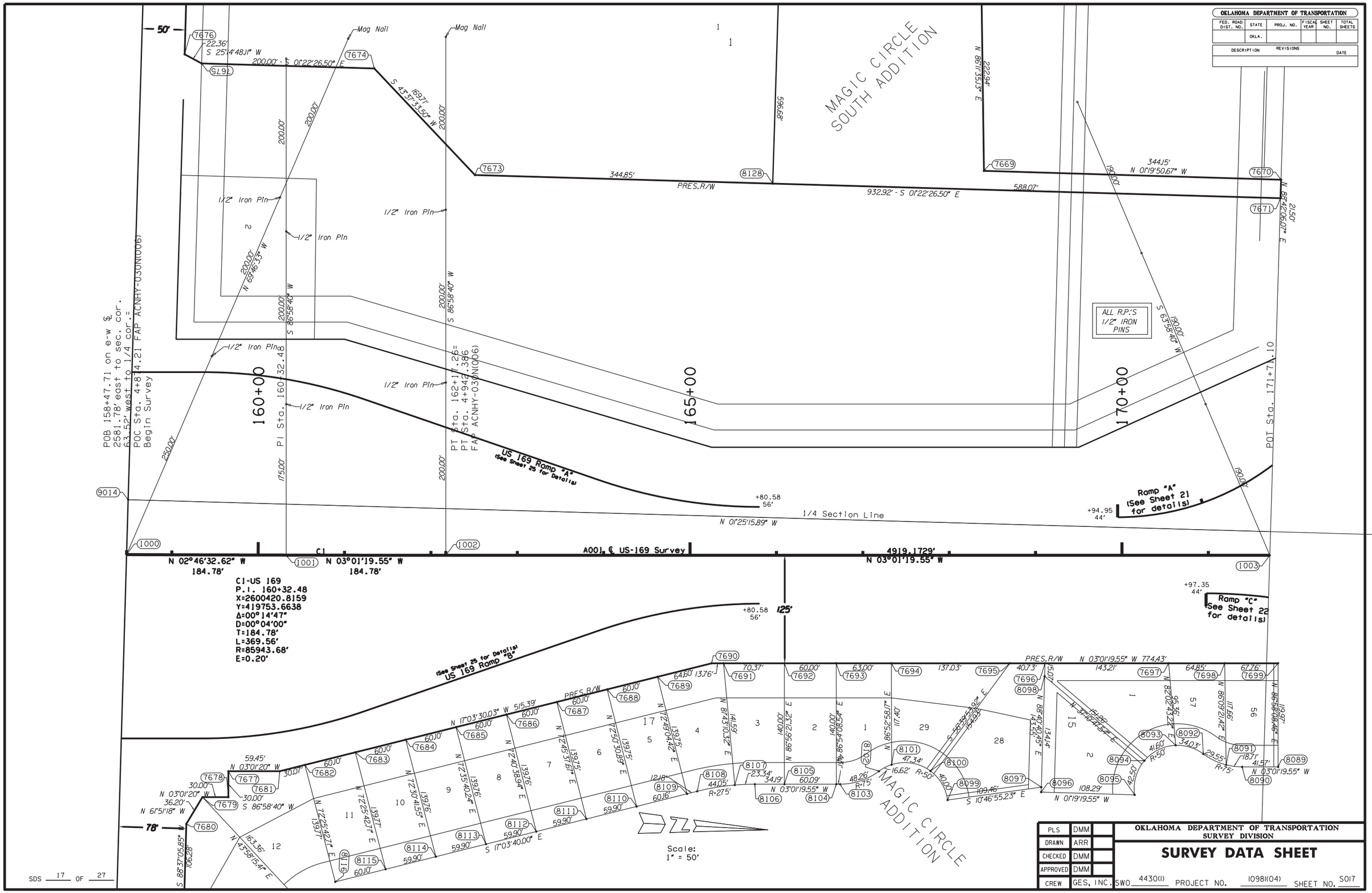

PLS	DMM	
DRAWN	ARR	
CHECKED	DMM	
APPROVED	DMM	
CREW	GES, INC.	

OKLAHOMA DEPARTMENT OF TRANSPORTATION
SURVEY DIVISION

SURVEY DATA SHEET

SWO 4430(1) PROJECT NO. 1098(04) SHEET NO. 5017

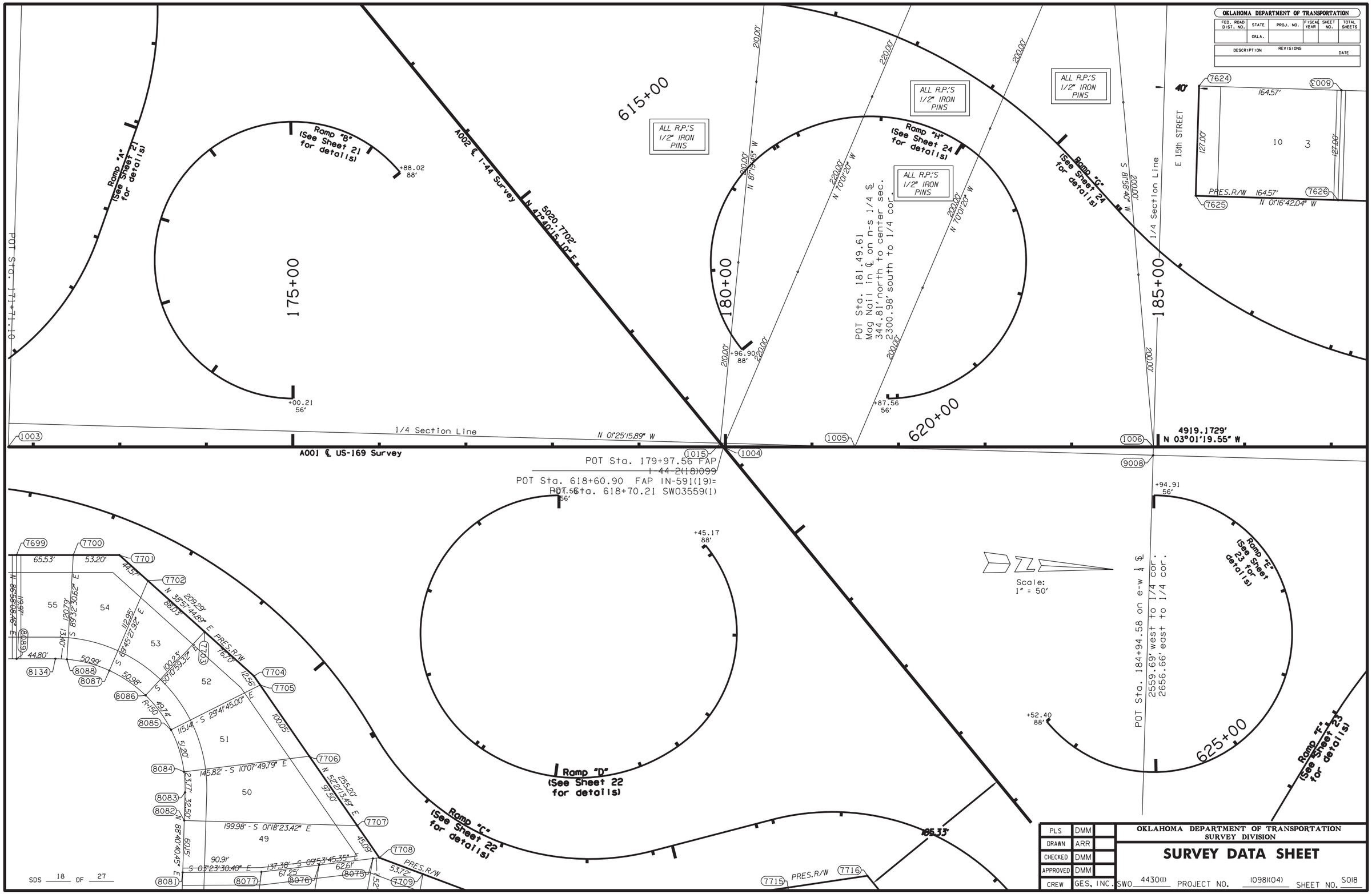
OKLAHOMA DEPARTMENT OF TRANSPORTATION
FED. ROAD DIST. NO. | STATE | PROJ. NO. | FISCAL YEAR | SHEET NO. | TOTAL SHEETS
OKLA.
DESCRIPTION | REVISIONS | DATE
ALL R.P.'S 1/2" IRON PINS
Ramp "A" (See Sheet 21 for details)
Ramp "B" (See Sheet 21 for details)
Ramp "C" (See Sheet 22 for details)
Ramp "D" (See Sheet 22 for details)
Ramp "E" (See Sheet 23 for details)
Ramp "F" (See Sheet 23 for details)
Ramp "G" (See Sheet 24 for details)
Ramp "H" (See Sheet 24 for details)
A002 ℄ I-44 Survey
5020.7702' N 47°40'15.10" E
A001 ℄ US-169 Survey
1/4 Section Line
N 01°25'15.89" W
POT Sta. 171+71.10
POT Sta. 179+97.56 FAP I-44-2(18)099
POT Sta. 618+60.90 FAP IN-591(19)=
POT Sta. 618+70.21 SW03559(1)
POT Sta. 181+49.61
Mag Nail in ℄ on n-s 1/4 ℄
344.81' north to center sec.
2300.98' south to 1/4 cor.
POT Sta. 184+94.58 on e-w 1/4 ℄
2559.69' west to 1/4 cor.
2656.66' east to 1/4 cor.
4919.1729'
N 03°01'19.55" W
E 15th STREET
PRES.R/W
N 01°16'42.04" W
S 87°58'40" W
Scale: 1" = 50'
615+00
620+00
625+00
175+00
180+00
185+00
185.33'
SDS 18 OF 27
PLS DMM
DRAWN ARR
CHECKED DMM
APPROVED DMM
CREW GES, INC.
OKLAHOMA DEPARTMENT OF TRANSPORTATION
SURVEY DIVISION
SURVEY DATA SHEET
SWO 4430(1) PROJECT NO. 1098(04) SHEET NO. S018

OKLAHOMA DEPARTMENT OF TRANSPORTATION					
FED. ROAD DIST. NO.	STATE	PROJ. NO.	FISCAL YEAR	SHEET NO.	TOTAL SHEETS
	OKLA.				

DESCRIPTION	REVISIONS	DATE

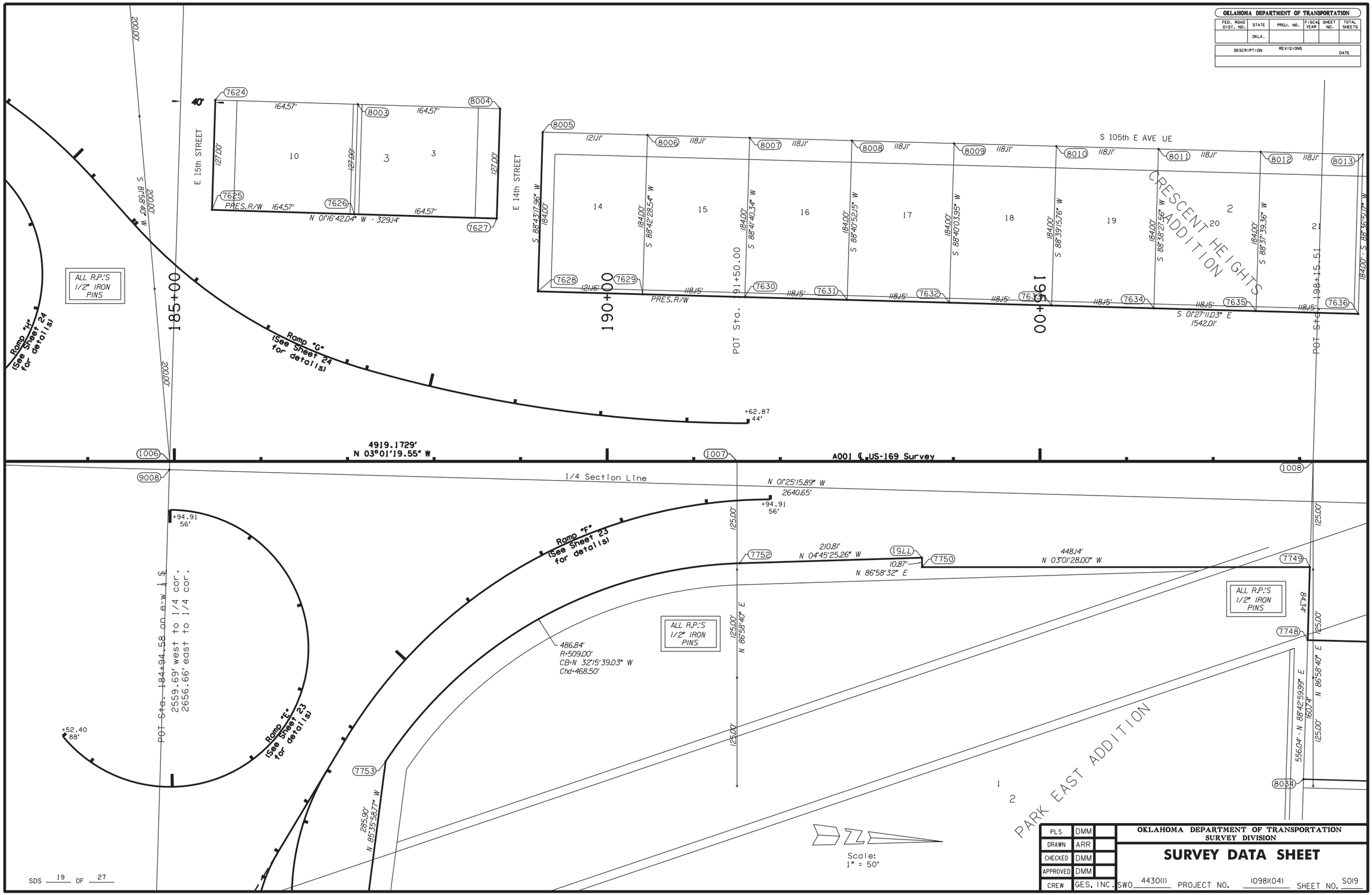

PLS	DMM	
DRAWN	ARR	
CHECKED	DMM	
APPROVED	DMM	
CREW	GES, INC.	

OKLAHOMA DEPARTMENT OF TRANSPORTATION
SURVEY DIVISION

SURVEY DATA SHEET

SWO 44301(1) PROJECT NO. 1098(04) SHEET NO. S019

SDS 19 OF 27

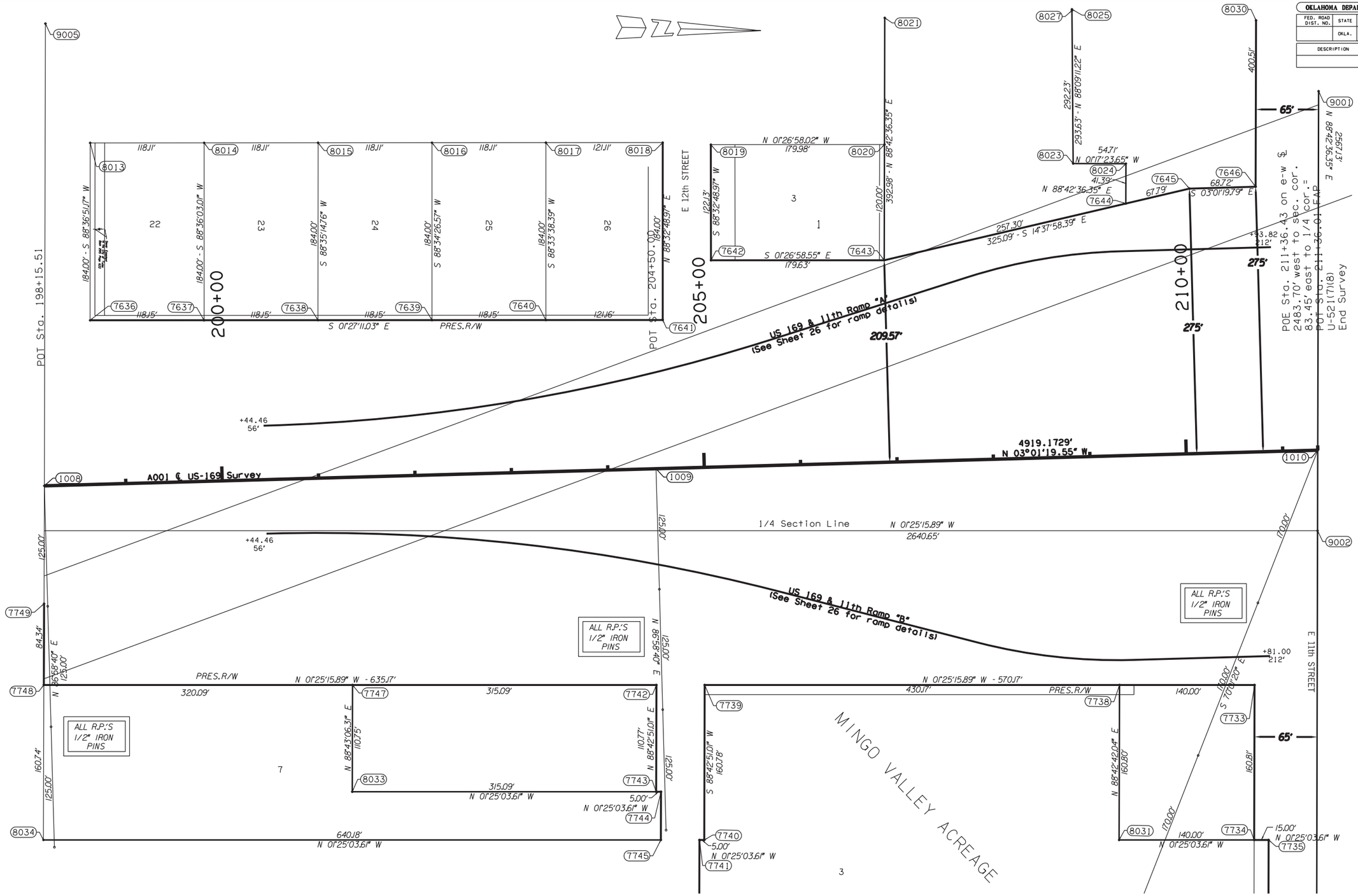

Scale:
1" = 50'

OKLAHOMA DEPARTMENT OF TRANSPORTATION					
FED. ROAD DIST. NO.	STATE	PROJ. NO.	FISCAL YEAR	SHEET NO.	TOTAL SHEETS
	OKLA.				

REVISIONS	
DESCRIPTION	DATE

PLS	DMM	
DRAWN	ARR	
CHECKED	DMM	
APPROVED	DMM	
CREW	GES, INC.	

OKLAHOMA DEPARTMENT OF TRANSPORTATION
SURVEY DIVISION

SURVEY DATA SHEET

SWO 44301(1) PROJECT NO. 10981(04) SHEET NO. S020

SDS 20 OF 27

OKLAHOMA DEPARTMENT OF TRANSPORTATION					
FED. ROAD DIST. NO.	STATE	PROJ. NO.	FISCAL YEAR	SHEET NO.	TOTAL SHEETS
	OKLA.				

DESCRIPTION	REVISIONS	DATE

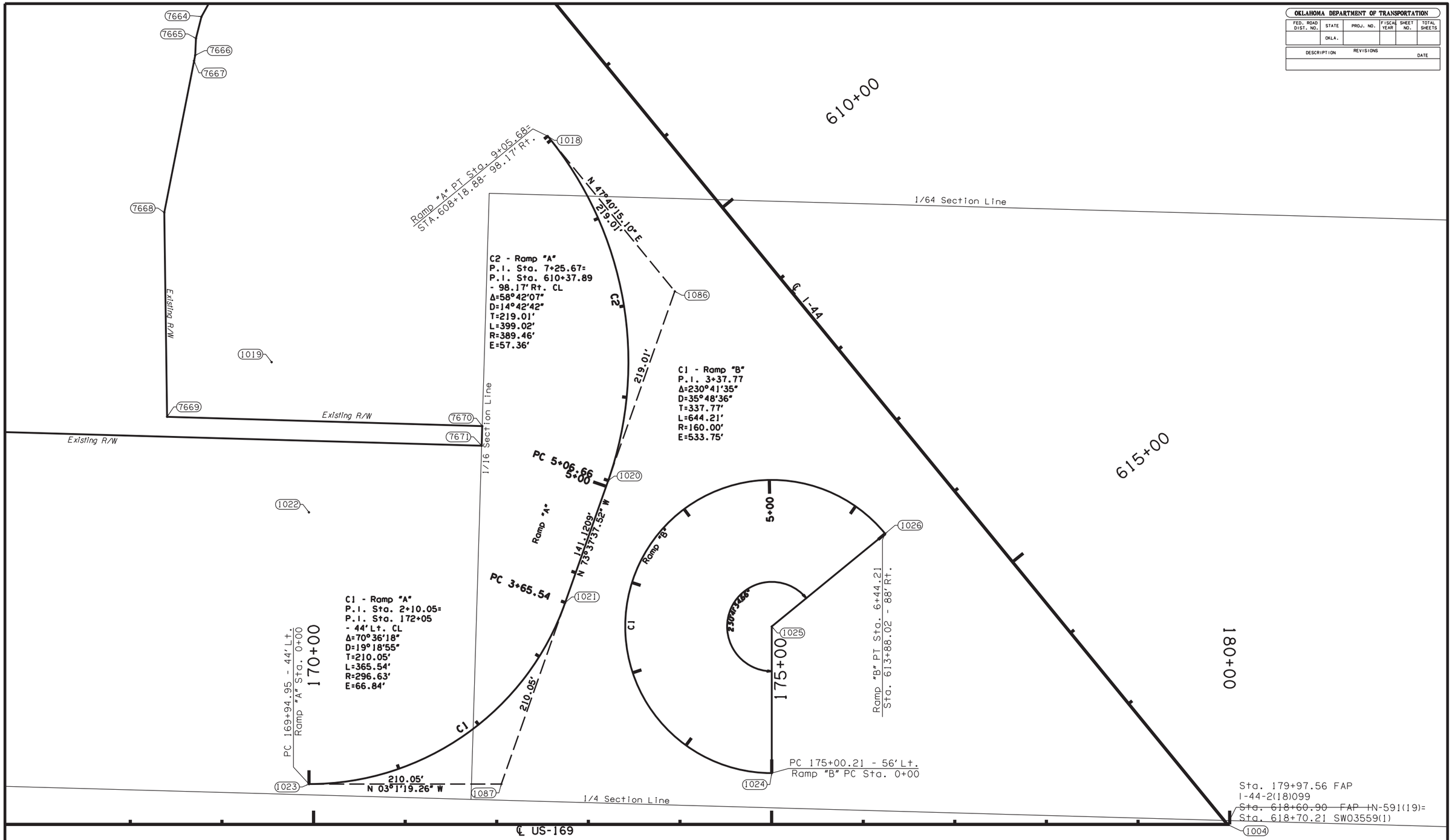

Scale:
1" = 50'

PLS	DMM	
DRAWN	ARR	
CHECKED	DMM	
APPROVED	DMM	
CREW	GES, INC.	

OKLAHOMA DEPARTMENT OF TRANSPORTATION
SURVEY DIVISION

SURVEY DATA SHEET

SWO 4430(1) PROJECT NO. 1098(04) SHEET NO. S021

SDS 21 OF 27

OKLAHOMA DEPARTMENT OF TRANSPORTATION					
FED. ROAD DIST. NO.	STATE	PROJ. NO.	FISCAL YEAR	SHEET NO.	TOTAL SHEETS
	OKLA.				

DESCRIPTION	REVISIONS	DATE

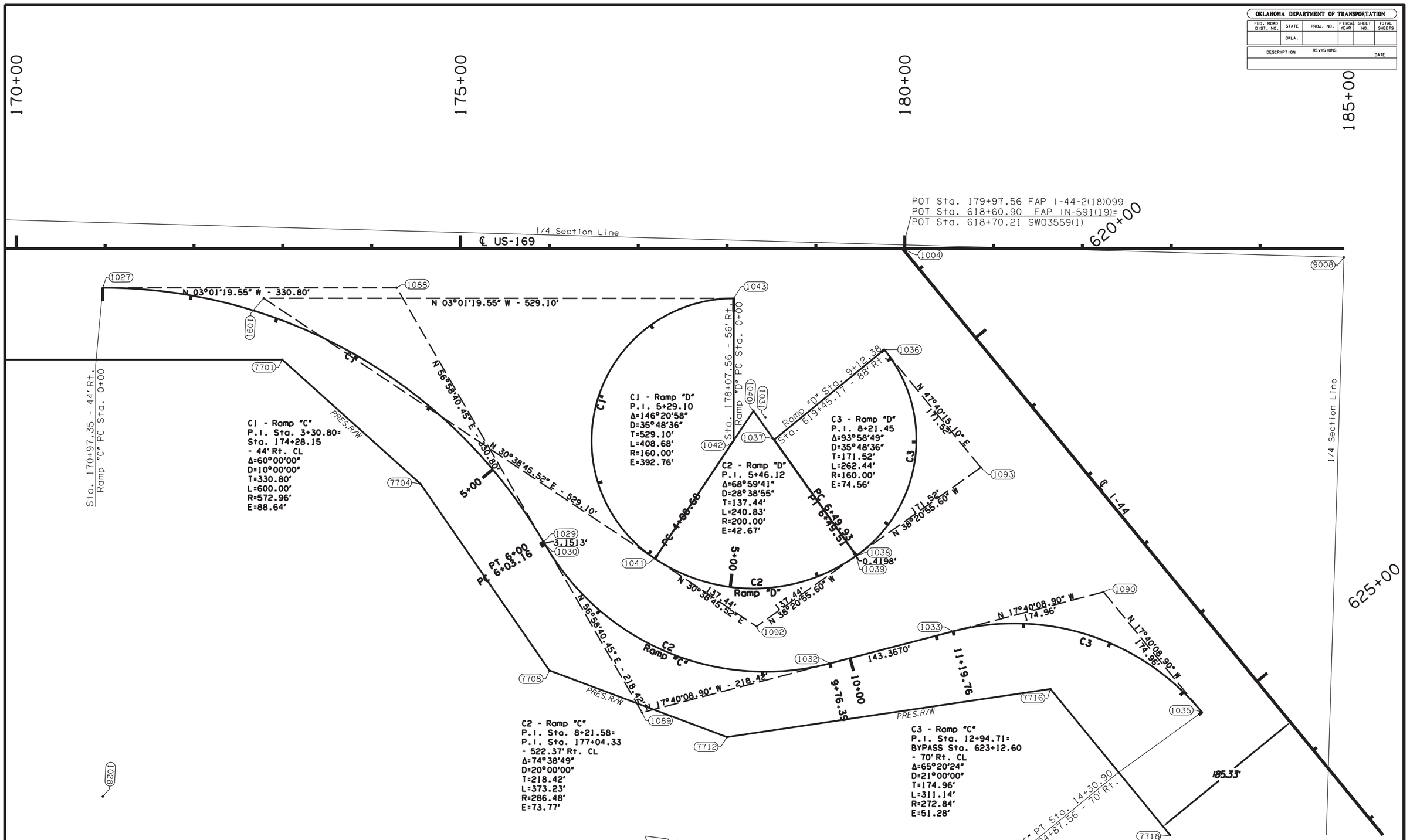

PLS	DMM	
DRAWN	ARR	
CHECKED	DMM	
APPROVED	DMM	
CREW	GES, INC.	

OKLAHOMA DEPARTMENT OF TRANSPORTATION
SURVEY DIVISION

SURVEY DATA SHEET

SWO 4430(1) PROJECT NO. 1098(04) SHEET NO. S022

OKLAHOMA DEPARTMENT OF TRANSPORTATION					
FED. ROAD DIST. NO.	STATE	PROJ. NO.	FISCAL YEAR	SHEET NO.	TOTAL SHEETS
	OKLA.				

DESCRIPTION	REVISIONS	DATE

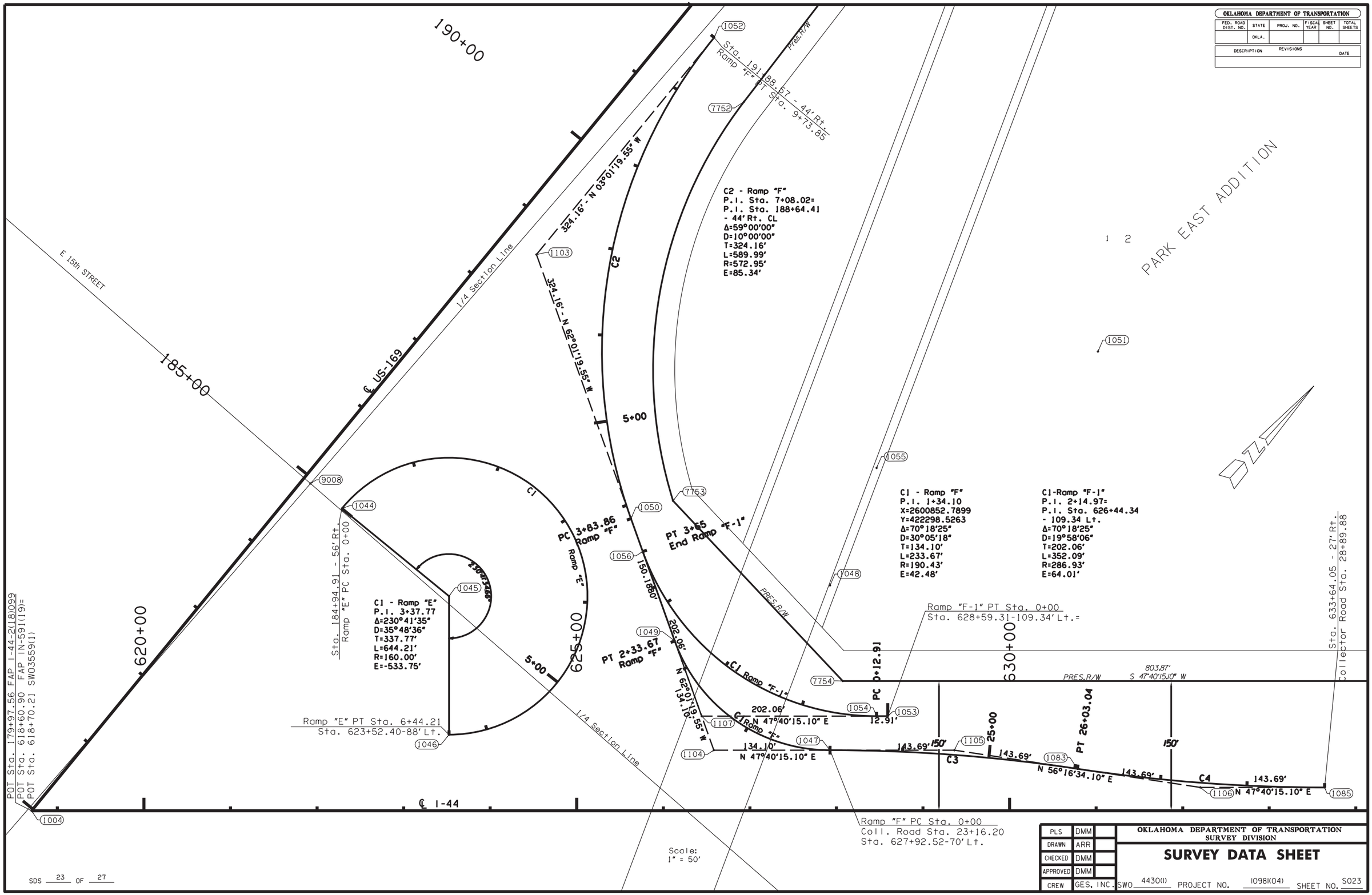

PLS	DMM	
DRAWN	ARR	
CHECKED	DMM	
APPROVED	DMM	
CREW	GES, INC.	

OKLAHOMA DEPARTMENT OF TRANSPORTATION
SURVEY DIVISION

SURVEY DATA SHEET

SWO 4430(1) PROJECT NO. 1098(04) SHEET NO. S023

OKLAHOMA DEPARTMENT OF TRANSPORTATION					
FED. ROAD DIST. NO.	STATE	PROJ. NO.	FISCAL YEAR	SHEET NO.	TOTAL SHEETS
	OKLA.				

DESCRIPTION	REVISIONS	DATE

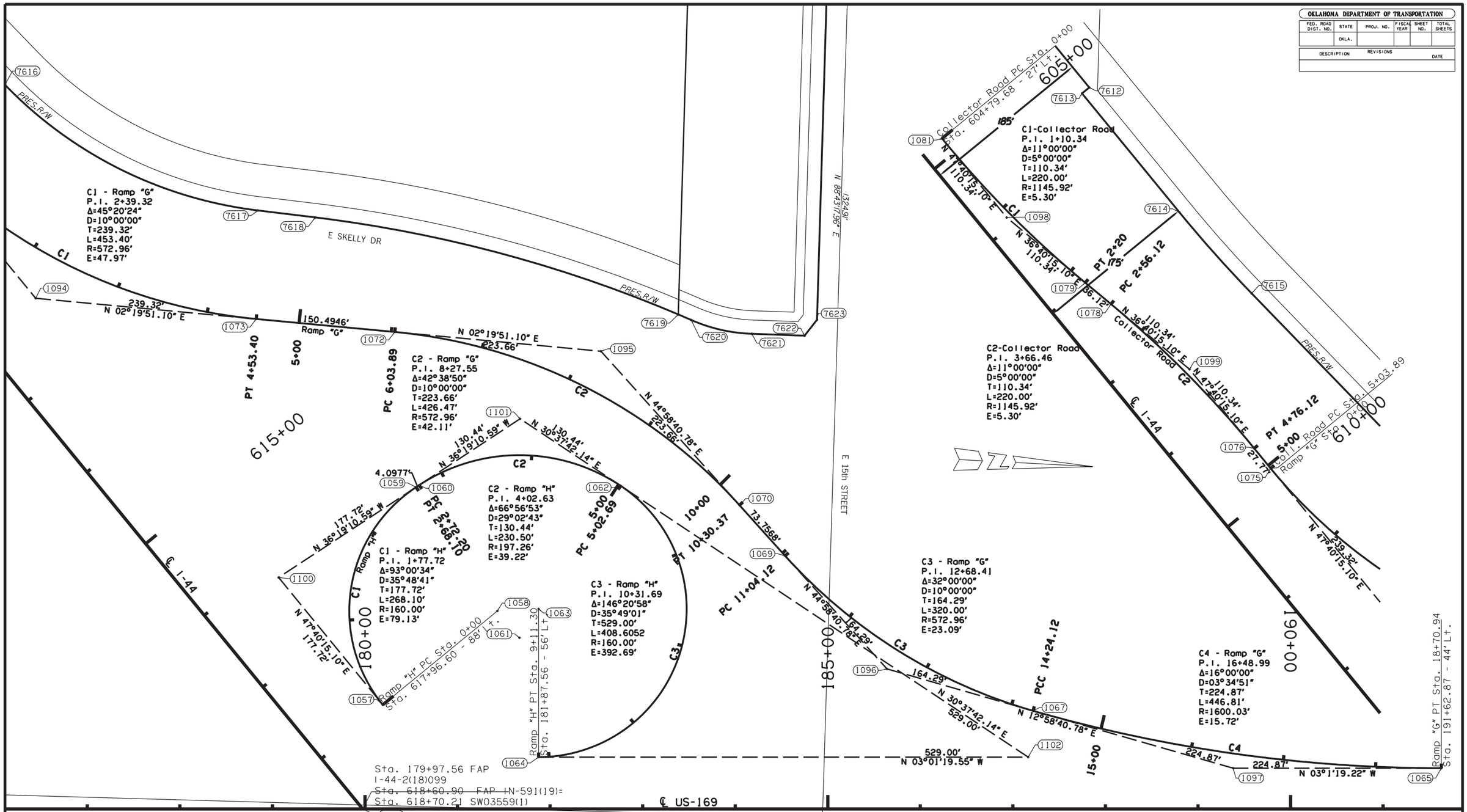

Scale:
1" = 50'

PLS	DMM	
DRAWN	ARR	
CHECKED	DMM	
APPROVED	DMM	
CREW	GES, INC.	

OKLAHOMA DEPARTMENT OF TRANSPORTATION
SURVEY DIVISION

SURVEY DATA SHEET

SWO 4430(1) PROJECT NO. 1098(04) SHEET NO. S024

OKLAHOMA DEPARTMENT OF TRANSPORTATION					
FED. ROAD DIST. NO.	STATE	PROJ. NO.	FISCAL YEAR	SHEET NO.	TOTAL SHEETS
	OKLA.				

REVISIONS	
DESCRIPTION	DATE

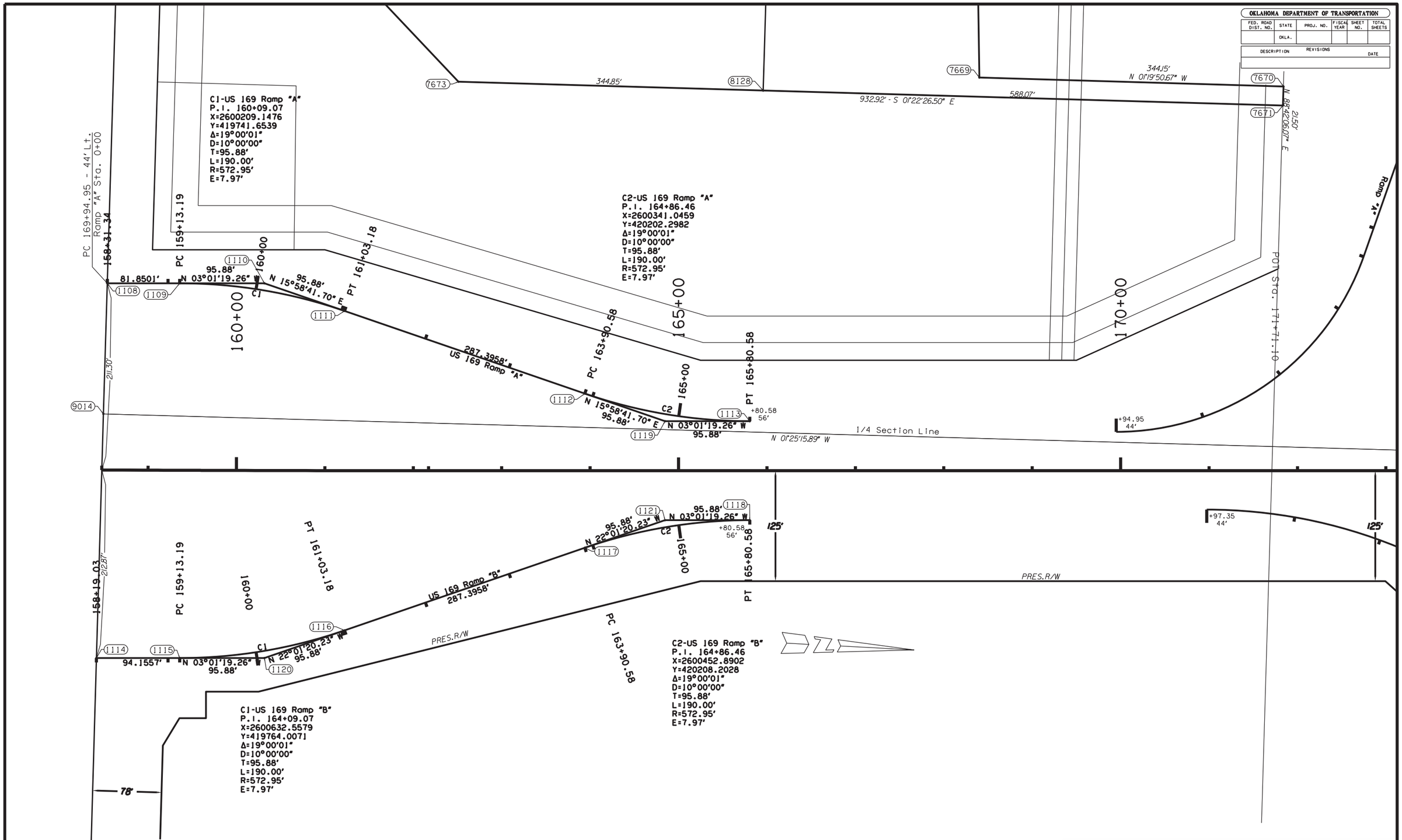

PLS	DMM	
DRAWN	ARR	
CHECKED	DMM	
APPROVED	DMM	
CREW	GES, INC.	

OKLAHOMA DEPARTMENT OF TRANSPORTATION
SURVEY DIVISION

SURVEY DATA SHEET

SWO 44301(1) PROJECT NO. 10981(04) SHEET NO. S025

OKLAHOMA DEPARTMENT OF TRANSPORTATION					
FED. ROAD DIST. NO.	STATE	PROJ. NO.	FISCAL YEAR	SHEET NO.	TOTAL SHEETS
	OKLA.				

DESCRIPTION	REVISIONS	DATE

C1-US 169/11th Ramp "A"	C2-US 169/11th Ramp "A"	C1-US 169/11th Ramp "B"	C2-US 169/11th Ramp "B"
P.I. 203+12.48	P.I. 208+74.94	P.I. 203+12.73	P.I. 208+75.19
X=2600139.2231	X=2599954.7614	X=2600251.0734	X=2600378.1717
Y=424025.1632	Y=424560.2083	Y=424031.0683	Y=424582.5621
Δ=16°00'00"	Δ=16°00'00"	Δ=16°00'00"	Δ=16°00'00"
D=02°59'59"	D=10°00'02"	D=02°59'59"	D=10°00'02"
T=268.43'	T=80.52'	T=268.43'	T=80.52'
L=533.37'	L=159.99'	L=533.37'	L=159.99'
R=1909.98'	R=572.93'	R=1909.98'	R=572.93'
E=18.77'	E=5.63'	E=18.77'	E=5.63'

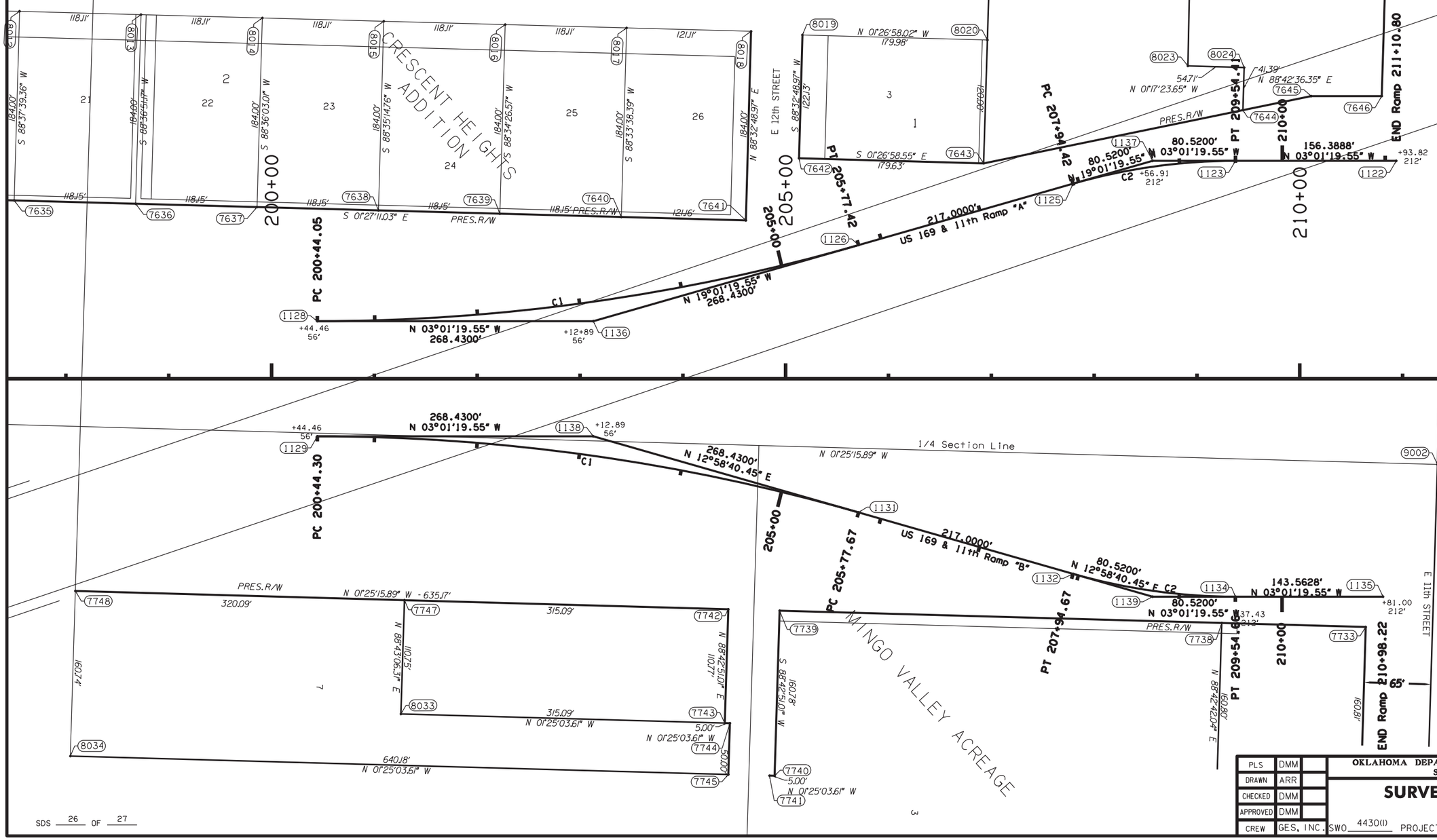

PLS	DMM	
DRAWN	ARR	
CHECKED	DMM	
APPROVED	DMM	
CREW	GES, INC.	

OKLAHOMA DEPARTMENT OF TRANSPORTATION
SURVEY DIVISION

SURVEY DATA SHEET

SWO 44301(1) PROJECT NO. 10981(04) SHEET NO. S026

SDS 26 OF 27

OKLAHOMA DEPARTMENT OF TRANSPORTATION					
FED. ROAD DIST. NO.	STATE	PROJ. NO.	FISCAL YEAR	SHEET NO.	TOTAL SHEETS
	OKLA.				

DESCRIPTION	REVISIONS	DATE

NORTHWEST CORNER OF SECTION 7, T-19-N, R-14-E, I.M. FOUND AND ACCEPTED A MAG NAIL AND FOUR REFERENCES LISTED ON A CERTIFIED CORNER RECORD FILED BY HANK TREMMEL, LS 1837, DATED 08/14/2015.

NORTH QUARTER CORNER OF SECTION 7, T-19-N, R-14-E, I.M. FOUND AND ACCEPTED A 3/8" IRON PIN AND FOUR REFERENCES LISTED ON A CERTIFIED CORNER RECORD FILED BY RANDY L. MARQUARDT, LS 1432, DATED 11/28/2006.

NORTHEAST CORNER OF SECTION 7, T-19-N, R-14-E, I.M. FOUND AND ACCEPTED A CHISELED X AND FOUR REFERENCES LISTED ON A CERTIFIED CORNER RECORD FILED BY RANDY L. MARQUARDT, LS 1432, DATED 02/17/2005.

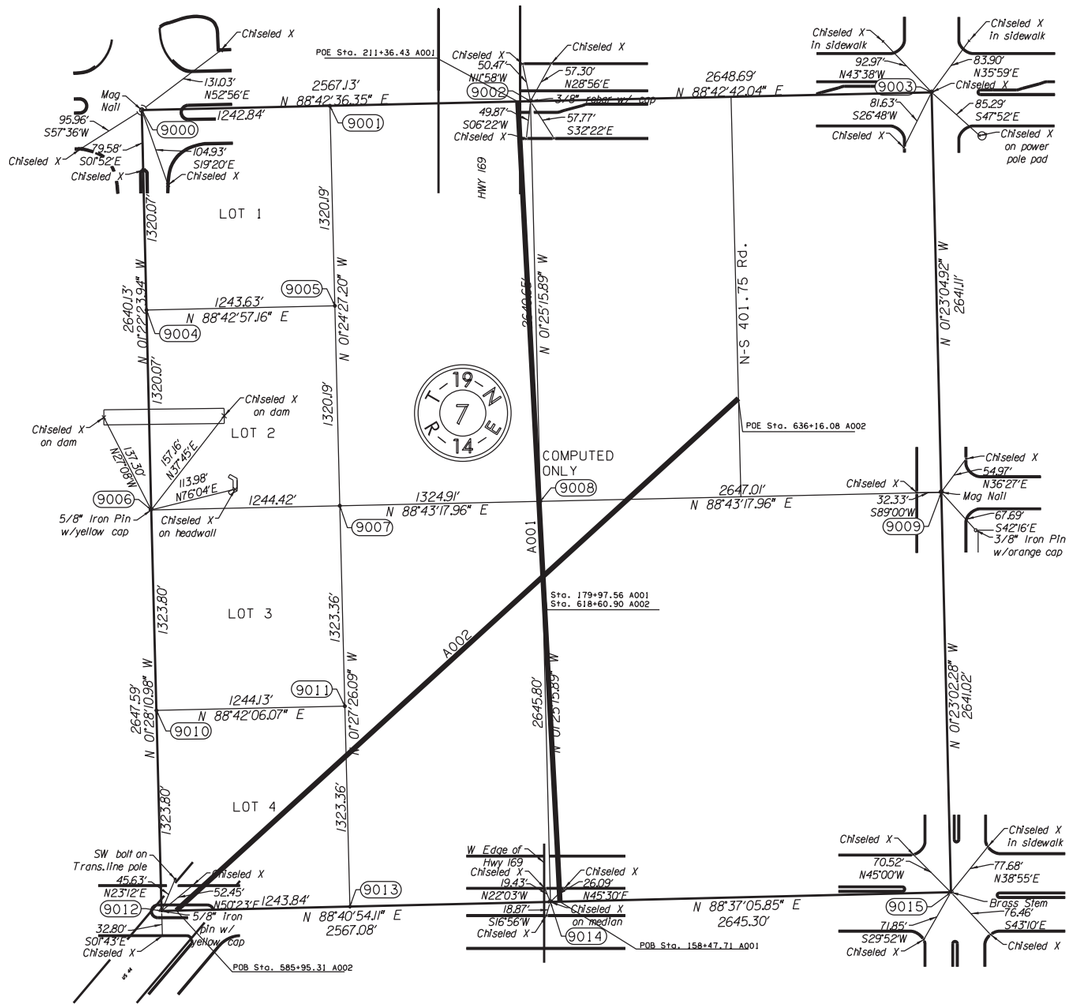

WEST QUARTER CORNER OF SECTION 7, T-19-N, R-14-E, I.M. FOUND AND ACCEPTED A 5/8" IRON PIN WITH YELLOW STAMPED "POE & ASSOC. 955 1395' AND THREE REFERENCES LISTED ON A CERTIFIED CORNER RECORD FILED BY JACK B. WEAVER, LS 955, DATED 07/22/1994.

FOUND AND REJECTED A 5/8" IRON PIN WITH YELLOW CAP STAMPED "RLS 1253" LISTED ON A CERTIFIED CORNER RECORD FILED BY J. WESLEY BILLS, LS 1135, DATED 01/02/2003, 4.32' S32° 07'E FROM THE ACCEPTED CORNER.

EAST QUARTER CORNER OF SECTION 7, T-19-N, R-14-E, I.M. FOUND AND ACCEPTED A MAG NAIL WITH WASHER AND TWP REFERENCES SET BY PERSONS UNKNOWN. SET 1 REFERENCE TO FOUND MONUMENT.

SOUTHWEST CORNER OF SECTION 7, T-19-N, R-14-E, I.M. FOUND AND ACCEPTED A 5/8" IRON PIN WITH YELLOW CAP AND TWO REFERENCES LISTED ON A CERTIFIED CORNER RECORD FILED BY RANDY L. MARQUARDT, LS 1432, DATED 02/17/2010. SET 1 REFERENCE TO FOUND MONUMENT.

SOUTH QUARTER CORNER OF SECTION 7, T-19-N, R-14-E, I.M. FOUND AND ACCEPTED A CHISELED X ON THE CONCRETE MEDIAN AND THREE REFERENCES LISTED ON A CERTIFIED CORNER RECORD FILED BY JACK B. WEAVER, LS 955, DATED 07/22/1994. FOUND AND REJECTED A CHISELED X LISTED ON A CERTIFIED CORNER RECORD FILED BY RANDY L. MARQUARDT, LS 1432, DATED 02/17/2010, 1.91' N46°59'W FROM THE ACCEPTED CORNER.

SOUTHEAST CORNER OF SECTION 7, T-19-N, R-14-E, I.M. FOUND AND ACCEPTED A BRASS STEM AND FOUR REFERENCES LISTED ON A CERTIFIED CORNER RECORD FILED BY RANDY L. MARQUARDT, LS 1432, DATED 02/17/2010.

N

Scale:
1" = 200'

NOTE: REFERENCES SHOWN ARE NOT TO SCALE

PLS	DMM	
DRAWN	ARR	
CHECKED	DMM	
APPROVED	DMM	
CREW	GES, INC.	

OKLAHOMA DEPARTMENT OF TRANSPORTATION
SURVEY DIVISION

SURVEY DATA SHEET

SWO 44301(1) PROJECT NO. 10981(04) SHEET NO. S027

ITEM No.	CL ROAD	STATION	SIGN	TYPE OF SIGN	TYPE OF POST	POST LENGTHS (LF)		LATERAL CLEARANCE (Edge of Lane) (Min)	FOOTING DESIGN No.	STRUCTURAL CONCRETE (CY)	REINFORCING STEEL (LB)	SIGN AREA (Sq. Ft.)		REMARKS
						A	B					SHEET	PANEL	
850 (A)	CL I-44	593+50 LT	W9-2	LANE ENDS MERGE LEFT	2" SQUARE TUBE POST	17	17	6	SSP1-1	0	0	16		
850 (A)	CL I-44	596+80 LT	W8-13F	BRIDGE ICES BEFORE ROAD	2" SQUARE TUBE POST	17	17	6	SSP1-1	0	0	16		
850 (A)	CL I-44	598+60 LT	W4-2E	LANE ENDS	2" SQUARE TUBE POST	17	17	6	SSP1-1	0	0	16		
850 (B)	CL I-44	599+60 LT	SPECIAL	INTERSTATE/STATE ROUTE SIGN	OVERHEAD SIGN POLE MOUNTED								232	
850 (B)	CL I-44	599+60 LT	SPECIAL	EXIT SIGN WITH EXIT NUMBER PLAQUE	OVERHEAD SIGN POLE MOUNTED								146	
850 (B)	CL I-44	599+60 LT	SPECIAL	EXIT SIGN WITH EXIT NUMBER PLAQUE	OVERHEAD SIGN POLE MOUNTED								104	
850 (A)	CL I-44	601+80 LT	W9-2	LANE ENDS MERGE LEFT	2" SQUARE TUBE POST	17	17	6	SSP1-1	0	0	16		
850 (A)	CL I-44	603+50 LT	M1-1	INTERSTATE ROUTE SIGN	3"@7.58 GALV.STL.PIPE POST	17		6	A-4	0.23	32	9		
850 (A)	CL I-44	603+50 LT	M1-6E(3)	STATE ROUTE SIGN	INTERSTATE ROUTE SIGN ASSEMBLY							9		
850 (A)	CL I-44	603+50 LT	M3-4	WEST	INTERSTATE ROUTE SIGN ASSEMBLY							5		
850 (A)	CL I-44	611+00 RT	W4-3 (R)	ADDED LANE	2" SQUARE TUBE POST	10	BARRIER MOUNTED					16		
850 (A)	Ramp "G"	110+00 RT	W4-3 (R)	ADDED LANE	2" SQUARE TUBE POST	17	17	6	SSP1-1	0	0	16		
850 (A)	CL I-44	612+00 LT	W4-3 (R)	ADDED LANE	2" SQUARE TUBE POST	17	17	6	SSP1-1	0	0	16		
850 (A)	CL I-44 (Ramp "B")	613+30 RT	R1-2	YIELD	2" SQUARE TUBE POST	17	17	6	SSP1-1	0	0	9		
850 (B)	CL I-44 (Ramp "H")	616+90 LT	E5-1a	EXIT GORE SIGN WITH SPEED PLAQUE	4"@13 GALV.STL.WD.FLANGE BM.POST	17	17	6	KC-0	0.36	65		65	
850 (B)	CL I-44 (Ramp "H")	616+90 LT	E13-1P	EXIT GORE ADVISORY SPEED (PLAQUE)	EXIT GORE SIGN ASSEMBLY								12	
850 (A)	CL I-44	618+00	W13-6E	COMBINATION OF HALN/EXIT/RAMP SPEED	2 1/2"@5.79 GALV.STL.PIPE POST	17	17	6	A-3	0.4	48	15		
850 (A)	CL I-44	620+00	W13-6E	COMBINATION OF HALN/EXIT/RAMP SPEED	2 1/2"@5.79 GALV.STL.PIPE POST	17	17	6	A-3	0.4	48	15		
850 (B)	CL I-44 (Ramp "D")	621+00 RT	E5-1a	EXIT GORE SIGN WITH SPEED PLAQUE	4"@13 GALV.STL.WD.FLANGE BM.POST	17	17	6	KC-0	0.36	65		65	
850 (B)	CL I-44 (Ramp "D")	621+00 RT	E13-1P	EXIT GORE ADVISORY SPEED (PLAQUE)	EXIT GORE SIGN ASSEMBLY								12	
850 (A)	CL I-44	624+30 LT	R1-2	YIELD	2" SQUARE TUBE POST	17	17	6	SSP1-1	0	0	25		
850 (B)	CL I-44	626+80 LT	E5-1a	EXIT GORE SIGN WITH SPEED PLAQUE	4"@13 GALV.STL.WD.FLANGE BM.POST	17	17	6	KC-0	0.36	65		65	
850 (B)	CL I-44	626+80 LT	E13-1P	EXIT GORE ADVISORY SPEED (PLAQUE)	EXIT GORE SIGN ASSEMBLY								12	
850 (A)	Ramps "B", "D", "H"		W1-8F	CHEVRON ALIGNMENT	2 1/2"@5.79 GALV.STL.PIPE POST	17		6	A-3	10.8	1296	648		54 EACH
850 (A)	CL 169	176+00 LT	W13-6E	COMBINATION OF HALN/EXIT/RAMP SPEED	2 1/2"@5.79 GALV.STL.PIPE POST	17	17	6	A-3	0.4	48	15		
		177+10 RT	W8-13F	BRIDGE ICES BEFORE ROAD	2" SQUARE TUBE POST	17	17	6	SSP1-1	0	0	16		
		183+00 LT	W8-13F	BRIDGE ICES BEFORE ROAD	2" SQUARE TUBE POST	17	17	6	SSP1-1	0	0	16		

LICENSED PROFESSIONAL ENGINEER
AYDA SOFIA GONZALEZ
25075
OKLAHOMA

9/16/2021

Design	.	
Drawn	.	
Checked	.	
Approved		
Squad	.	

INTERCHANGE (OPERATIONAL IMPROVEMENTS) TULSA COUNTY

SUMMARY OF SIGNS

JOB PIECE NO. 10981(05) SHEET NO. T001

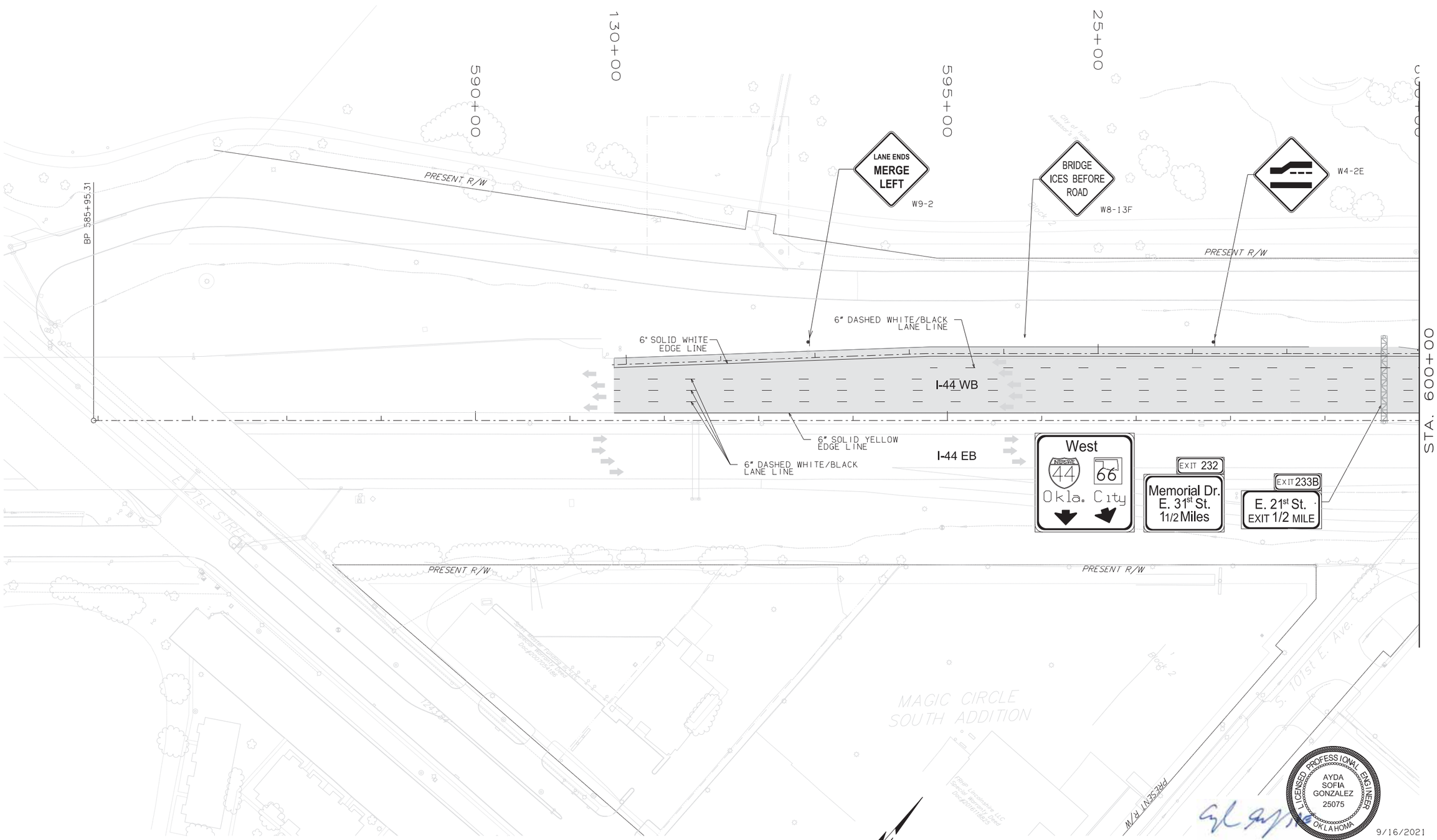

Design	.	
Drawn	.	
Checked	.	
Approved		
Squad	.	

INTERCHANGE (OPERATIONAL IMPROVEMENTS) TULSA COUNTY

SIGNING & STRIPING
(SHEET 1 OF 6)

JOB PIECE NO. 10981(05)

SHEET NO. T002

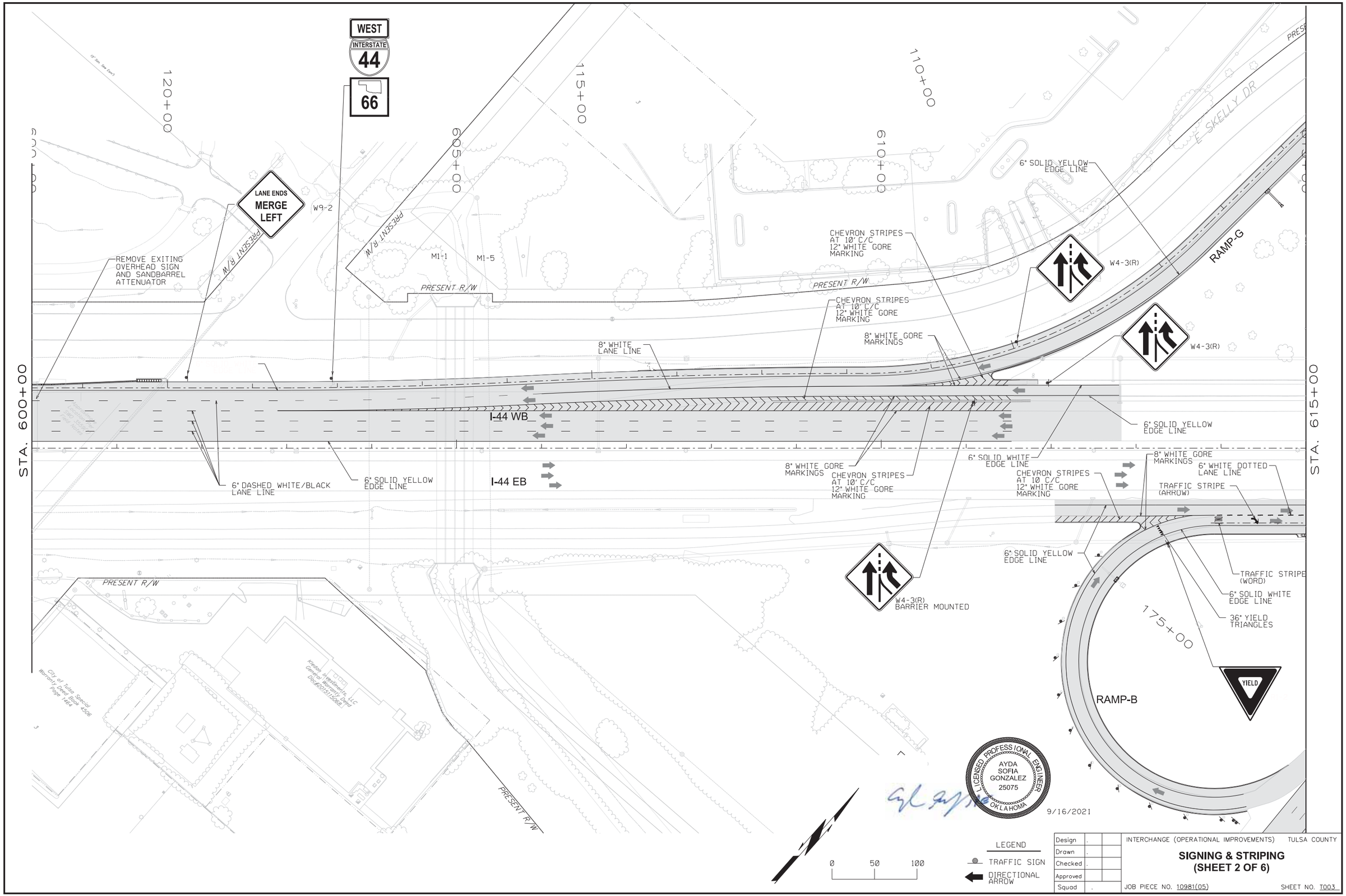

Design	.	
Drawn	.	
Checked	.	
Approved		
Squad	.	

INTERCHANGE (OPERATIONAL IMPROVEMENTS) TULSA COUNTY

SIGNING & STRIPING (SHEET 2 OF 6)

JOB PIECE NO. 10981(05) SHEET NO. T003

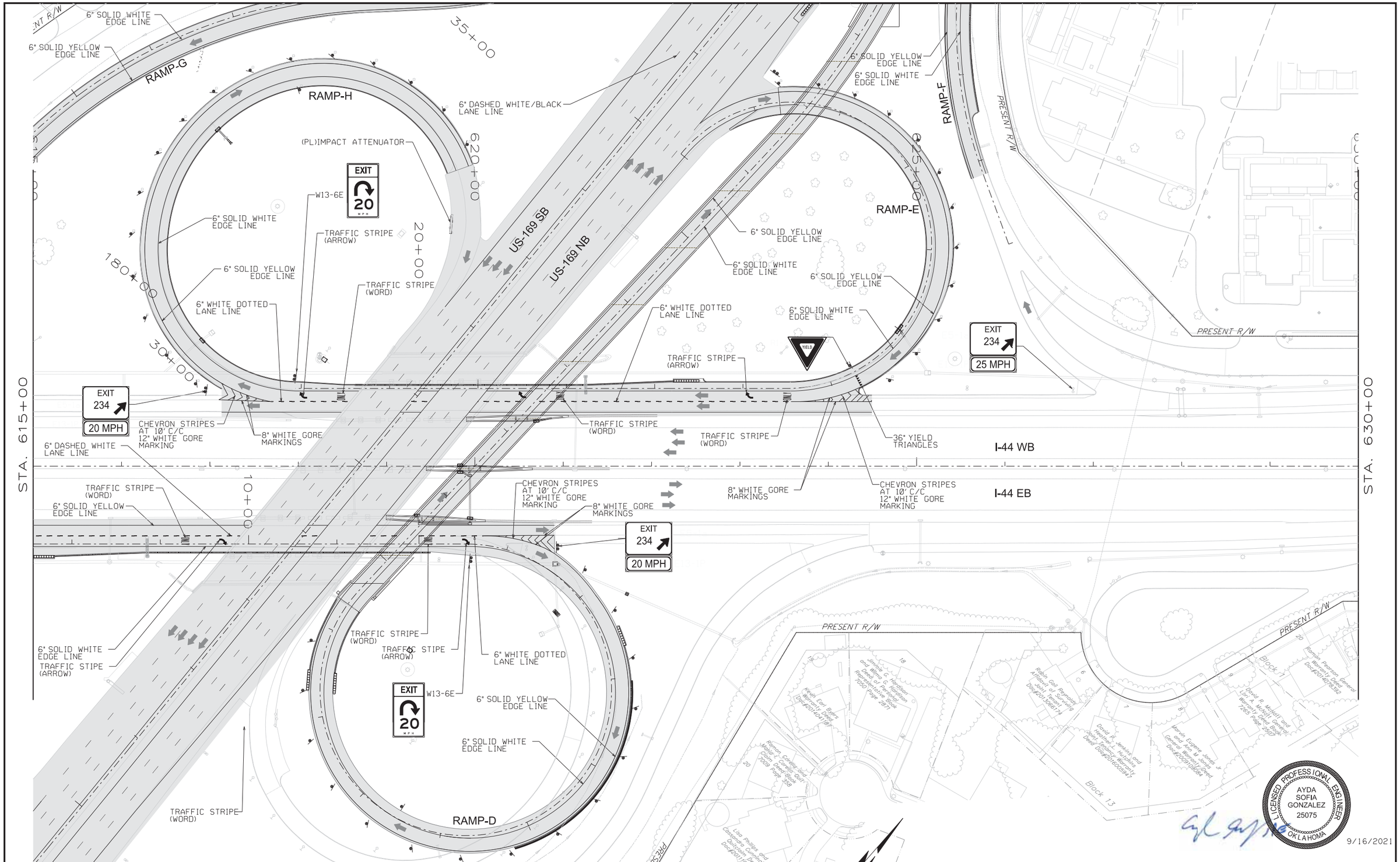

Design	.	
Drawn	.	
Checked	.	
Approved		
Squad	.	

INTERCHANGE (OPERATIONAL IMPROVEMENTS) TULSA COUNTY

SIGNING & STRIPING (SHEET 3 OF 6)

JOB PIECE NO. 10981(05)

SHEET NO. T004

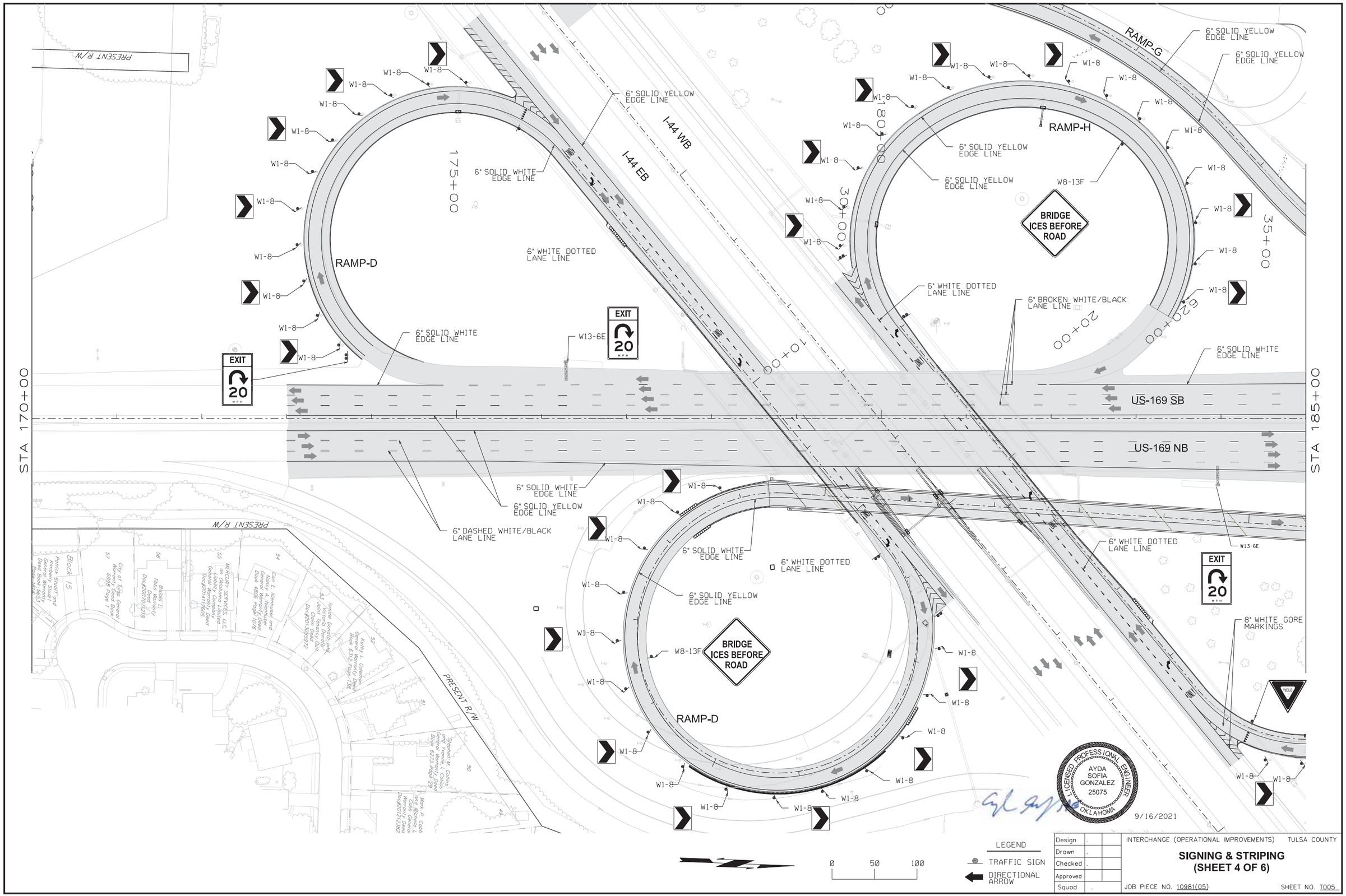

Design	.	
Drawn	.	
Checked	.	
Approved		
Squad	.	

INTERCHANGE (OPERATIONAL IMPROVEMENTS) TULSA COUNTY

SIGNING & STRIPING (SHEET 4 OF 6)

JOB PIECE NO. 10981(05)

SHEET NO. T005

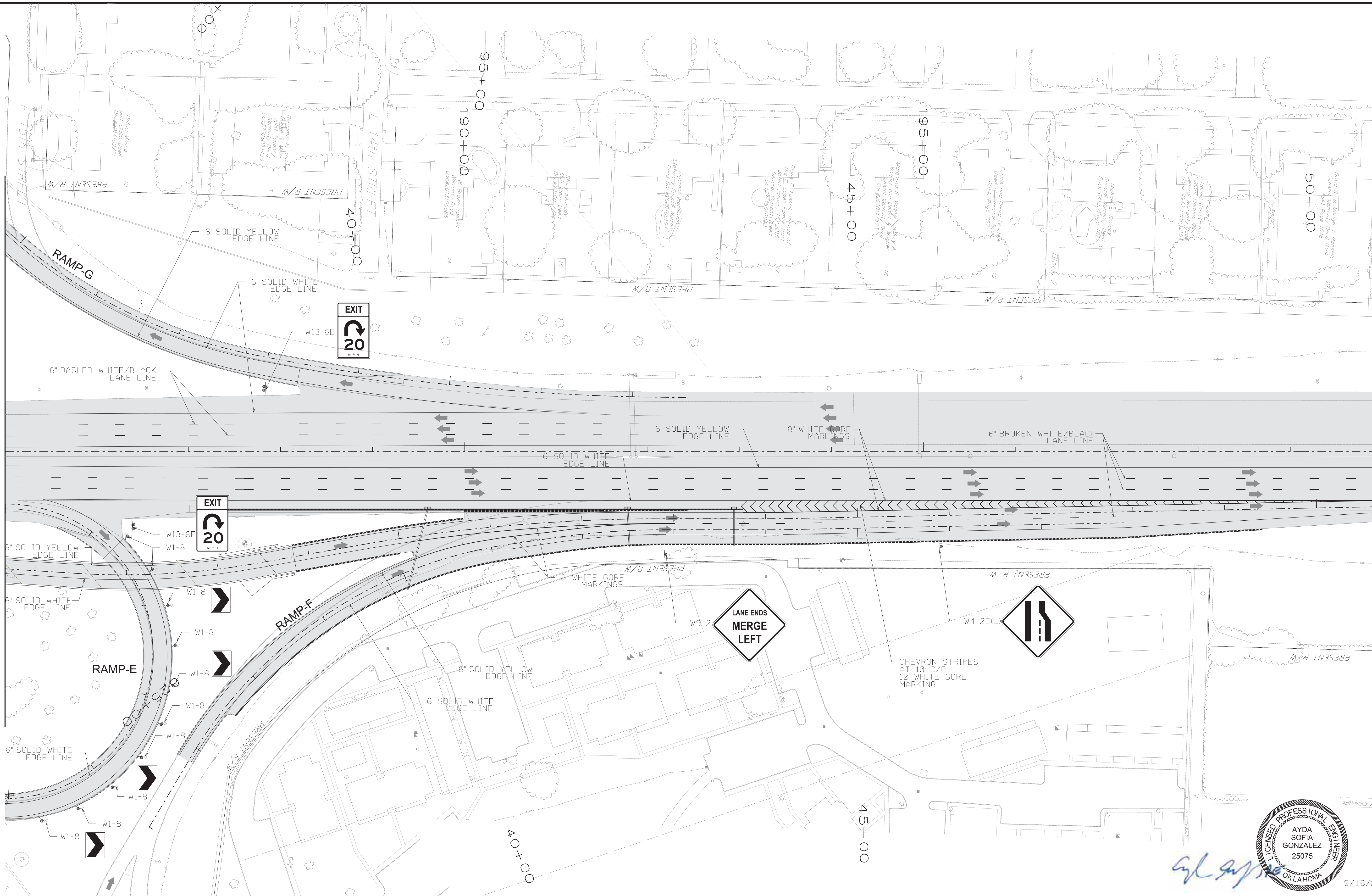

AYDA SOFIA GONZALEZ 25075
LICENSED PROFESSIONAL ENGINEER
OKLAHOMA

9/16/2021

0 50 100

LEGEND
TRAFFIC SIGN
DIRECTIONAL ARROW

Design	INTERCHANGE (OPERATIONAL IMPROVEMENTS) TULSA COUNTY
Drawn	
Checked	**SIGNING & STRIPING (SHEET 5 OF 6)**
Approved	
Squad	JOB PIECE NO. 10981(05) SHEET NO. T006

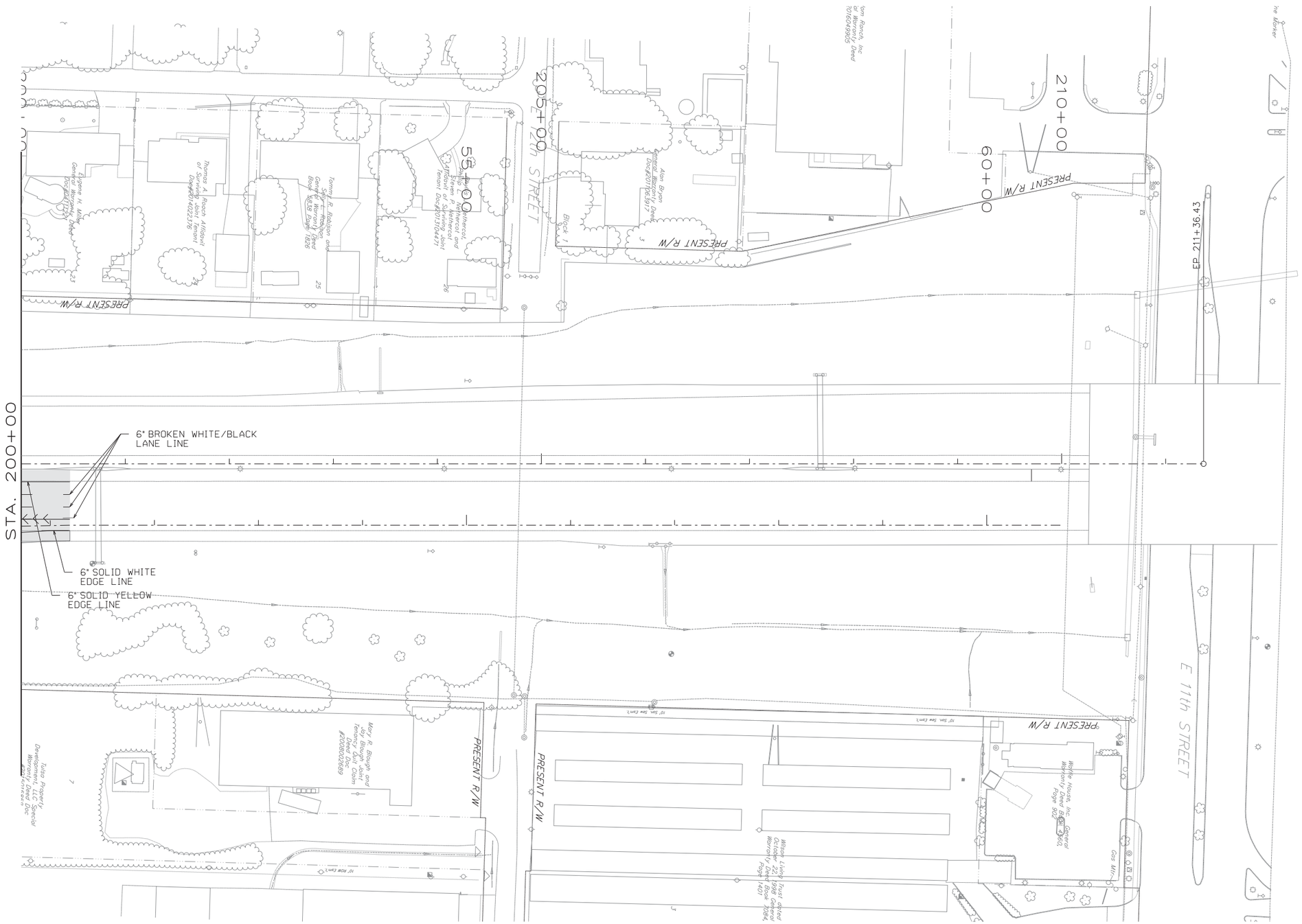

LEGEND

TRAFFIC SIGN

DIRECTIONAL ARROW

0 50 100

LICENSED PROFESSIONAL ENGINEER
AYDA SOFIA GONZALEZ
25075
OKLAHOMA

9/16/2021

Design	.	
Drawn	.	
Checked	.	
Approved		
Squad	.	

INTERCHANGE (OPERATIONAL IMPROVEMENTS) TULSA COUNTY

SIGNING & STRIPING (SHEET 6 OF 6)

JOB PIECE NO. 10981(05)

SHEET NO. T007

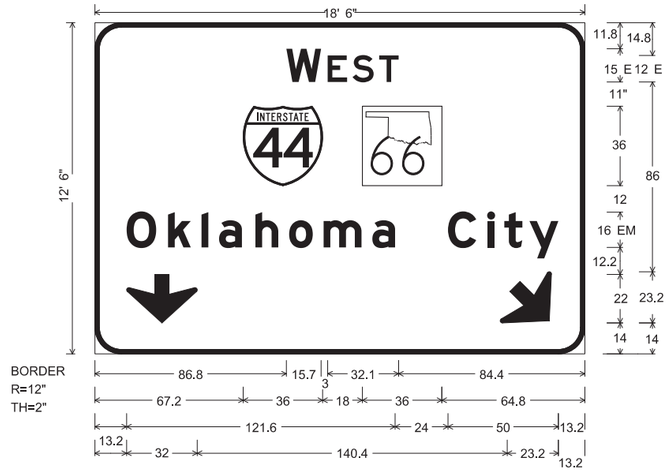

SIGN NUMBER	SS # 1	QUANTITY	1
STATIONS	none		
WIDTH X HEIGHT	18'6" X 12' 6"		
BORDER WIDTH	2"		
CORNER RADIUS	12"		
MOUNTING	Overhead		
BACKGROUD	TYPE:	Reflective	
	COLOR:	Green	
	COLOR:	Green	
LEGEND/BORDER	TYPE:	Reflective	
	COLOR:	Green	
	COLOR:	Green	

SYMBOL	ROT	X	Y	WID	HT
M1_1	0	67.2	76	36	36
M1_5c	0	121.2	76	36	36
ARDOWN	0	13.2	14	32	22
ARDOWN	315	185.6	14	23.2	23.2

LETTER POSITIONS(X)															LENGTH	SERIES/SIZE
W	E	S	T													E 2000
86.8	105.5	116.8	128.8												50.8	
O	K	L	A	H	O	M	A			C	I	T	Y			EM 2000
14.4	33.1	48.3	56.3	72.7	88	103.6	125.7			160	178	185.5	196.6		195.5	

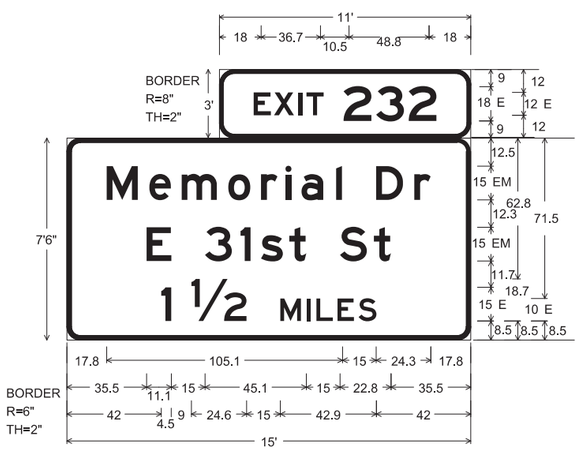

SIGN NUMBER	SS # 3	QUANTITY	1
STATIONS	none		
WIDTH X HEIGHT	15 'X 7'6"		
BORDER WIDTH	2"		
CORNER RADIUS	6"		
MOUNTING	Overhead		
BACKGROUD	TYPE:	Reflective	
	COLOR:	Green	
	COLOR:	Green	
LEGEND/BORDER	TYPE:	Reflective	
	COLOR:	White	
	COLOR:	White	

SIGN NUMBER	SS # 3E	QUANTITY	1
STATIONS	none		
WIDTH X HEIGHT	11' X 3'		
BORDER WIDTH	2"		
CORNER RADIUS	8"		
MOUNTING	Overhead		
BACKGROUD	TYPE:	Reflective	
	COLOR:	Green	
	COLOR:	Green	
LEGEND/BORDER	TYPE:	Reflective	
	COLOR:	White	
	COLOR:	White	

LETTER POSITIONS(X)											LENGTH	SERIES/SIZE
E	X	I	T		2	3	3	B				E 2000
15.0	25.7	38.5	42.7		65.9	83	100.1	122.6			126	
E		2	1	s	t		S	t				EM 2000
25.0		48.9	65.8	75.5	89.0		106.7	122.8			106	
E	X	I	T	1/2	M	I	L	E				E 2000
23.1	32.6	43.3	47.4	66.8	99.7	111.5	116	125.5			109.8	

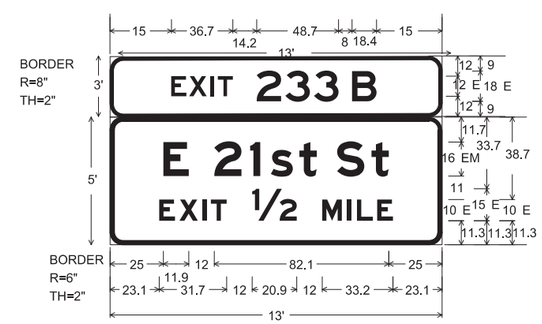

SIGN NUMBER	SS # 2	QUANTITY	1
STATIONS	none		
WIDTH X HEIGHT	13' X 5'		
BORDER WIDTH	2		
CORNER RADIUS	6		
MOUNTING	Overhead		
BACKGROUD	TYPE:	Reflective	
	COLOR:	Green	
	COLOR:	Green	
LEGEND/BORDER	TYPE:	Reflective	
	COLOR:	Green	
	COLOR:	Green	

SIGN NUMBER	SS #2E	QUANTITY	1
STATIONS	none		
WIDTH X HEIGHT	13' X 3'		
BORDER WIDTH	2		
CORNER RADIUS	8		
MOUNTING	Overhead		
BACKGROUD	TYPE:	Reflective	
	COLOR:	Green	
	COLOR:	Green	
LEGEND/BORDER	TYPE:	Reflective	
	COLOR:	Green	
	COLOR:	Green	

LETTER POSITIONS(X)												LENGTH	SERIES/SIZE
E	X	I	T		2	3	2						E 2000
18	28.7	41.5	45.7		65.2	82.3	99.4					96	
M	e	m	o	r	i	a	l		D	r			EM 2000
17.8	36.7	51.2	71.9	86.5	97.4	104.6	120.0		137.9	154.8		189.4	
E		3	1	s	t		S	t					EM 2000
35.5		61.6	77.4	86.5	99.1		121.7	136.8				109	
1		1/2		M	I	L	E	S					E 2000
42		55.5		95.1	1	111.2	120.6	130.0				96	

LICENSED PROFESSIONAL ENGINEER
AYDA SOFIA GONZALEZ
25075
OKLAHOMA

9/16/2021

Design	.	
Drawn	.	
Checked	.	
Approved		
Squad	.	

INTERCHANGE (OPERATIONAL IMPROVEMENTS) TULSA COUNTY

SPECIAL SIGN DETAILS

JOB PIECE NO. 10981(05)

SHEET NO. T008

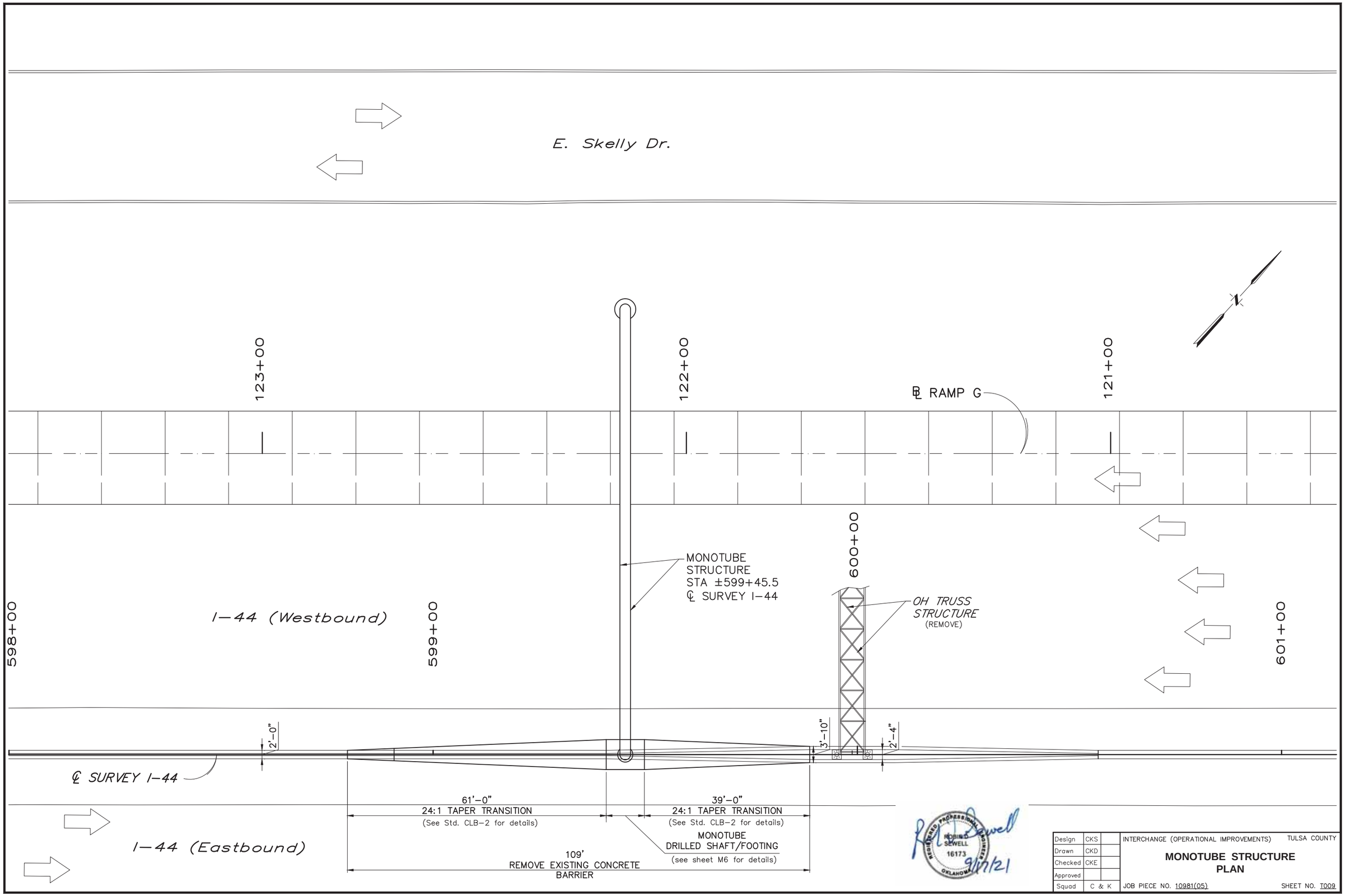
E. Skelly Dr.
123+00
122+00
121+00
℄ RAMP G
MONOTUBE
STRUCTURE
STA ±599+45.5
℄ SURVEY I-44
600+00
OH TRUSS
STRUCTURE
(REMOVE)
598+00
I-44 (Westbound)
599+00
601+00
2'-0"
3'-10"
2'-4"
℄ SURVEY I-44
61'-0"
24:1 TAPER TRANSITION
(See Std. CLB-2 for details)
39'-0"
24:1 TAPER TRANSITION
(See Std. CLB-2 for details)
MONOTUBE
DRILLED SHAFT/FOOTING
(see sheet M6 for details)
109'
REMOVE EXISTING CONCRETE
BARRIER
I-44 (Eastbound)
REGISTERED PROFESSIONAL ENGINEER
ROBIN D. SEWELL
16173
OKLAHOMA
9/17/21
Design CKS
Drawn CKD
Checked CKE
Approved
Squad C & K
INTERCHANGE (OPERATIONAL IMPROVEMENTS)
TULSA COUNTY
MONOTUBE STRUCTURE
PLAN
JOB PIECE NO. 10981(05)
SHEET NO. T009

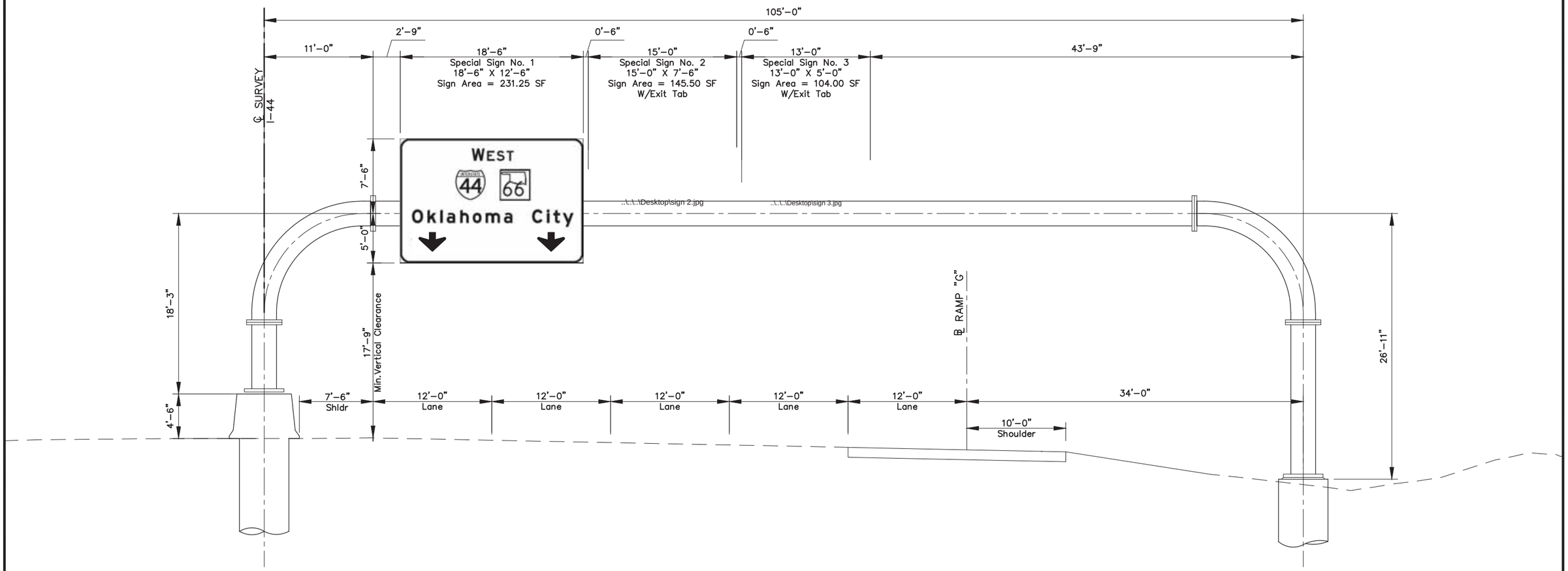

MONOTUBE STRUCTURE(WESTBOUND)

STA. 599+42 (I-44)

(TOTAL SIGN AREA = 480.75)

NOTE:

DIMENSIONS SHOWN ARE FOR BIDDING PURPOSES ONLY. MINIMUM VERTICAL CLEARANCE OVER ROADWAY SHALL BE 17'-9" OR AS DIRECTED BY THE ENGINEER. THE CONTRACTOR SHALL VERIFY ALL DIMENSIONS AND RECEIVE APPROVAL BY THE ENGINEER PRIOR TO FABRICATION.

SEE SHEETS M1 THRU M7 FOR MONOTUBE STRUCTURE DETAILS.

REGISTERED PROFESSIONAL ENGINEER
RODNEY SEWELL
16173
OKLAHOMA
9/17/21

Survey	CKS	
Drawn	CKD	
Checked	CKE	
Approved		
Squad	C & K	

INTERCHANGE (OPERATIONAL IMPROVEMENTS) TULSA COUNTY

MONOTUBE STRUCTURE
SIGN LAYOUT DETAILS

JOB PIECE NO. 10981(05) SHEET NO. T010

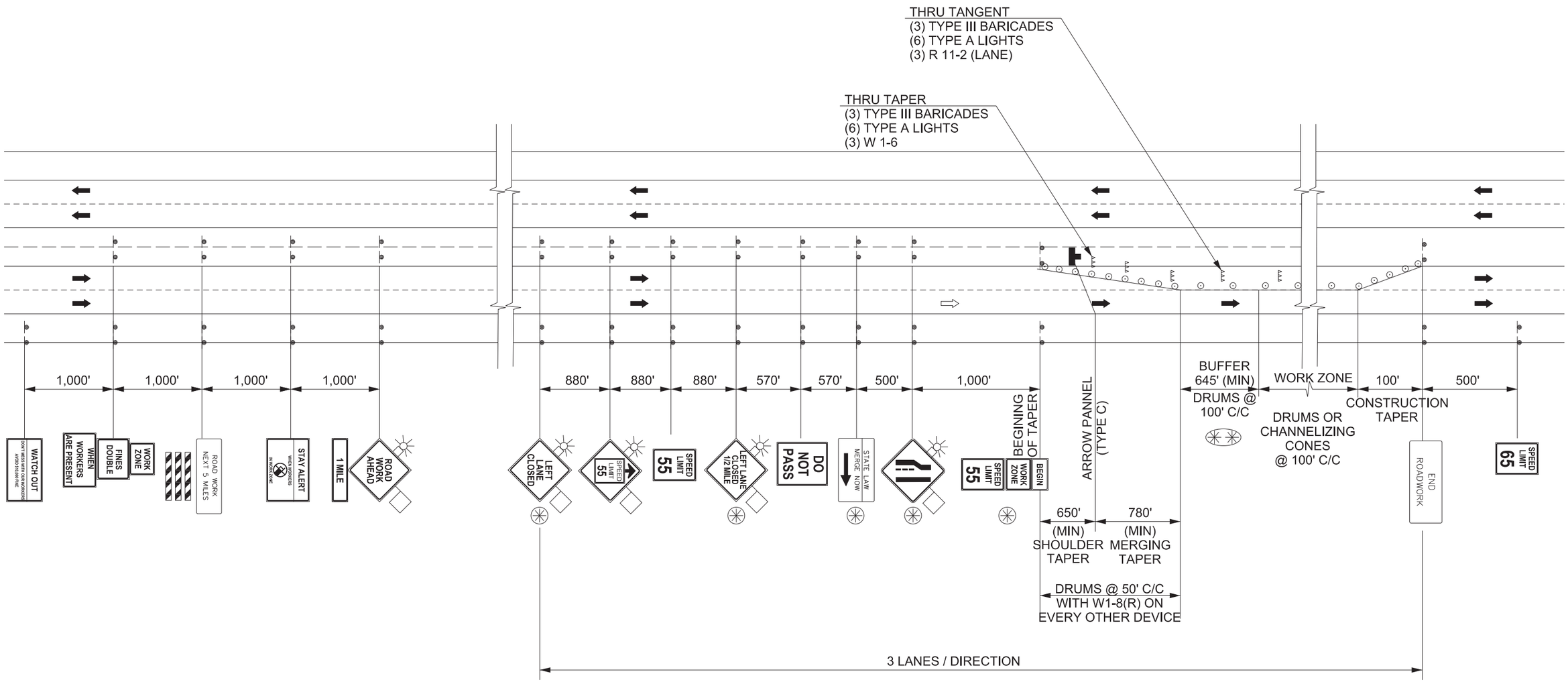

TYPICAL LANE CLOSURE ON I-44 / US-169

LEFT LANE CLOSURE SHOWN.
REVERSE THESE SIGNS FOR
RIGHT LANE CLOSURE.

FOR LANE CLOSURES WITHIN THE INTERCHANGE
OR NEAR THE RAMPS, WHEN THE WORK ZONE IS
PROPTECTED BY PORTABLE LONGITUDINAL BARRIER,
THE "BUFFER" LENTH MAY BE SHORTENED TO AVOID
EXTENDING THE LANE CLOSURE PAST THE RAMP TERMINAL.

PORTABLE LONGITUDINAL BARRIER NOT SHOWN FOR CLARITY.
UTILIZE BARRIER TO PROTECT WORK ZONE AS REQUIRED.

LICENSED PROFESSIONAL ENGINEER
AYDA
SOFIA
GONZALEZ
25075
OKLAHOMA

9/16/2021

Design	.	
Drawn	.	
Checked	.	
Approved		
Squad	.	

INTERCHANGE (OPERATIONAL IMPROVEMENTS) TULSA COUNTY

US-169/I-44

65 MPH LANE REDUCTION

ADVANCE SIGNING

JOB PIECE NO. 10981(05) SHEET NO. T011

REV. NO.	DESCRIPTION	DATE
1	REVISE DETOUR	05-13-2022

REVISION

LEGEND

- TRAFFIC SIGN
- DIRECTIONAL ARROW (ADVANCE)
- DIRECTIONAL ARROW (PROPER)
- CONSTRUCTION ZONE THIS PHASE
- CHANGEABLE MESSAGE SIGN

LICENSED PROFESSIONAL ENGINEER
AYDA SOFIA GONZALEZ
25075
OKLAHOMA

9/16/2021

Design	.	
Drawn	.	
Checked	.	
Approved		
Squad	.	

INTERCHANGE (OPERATIONAL IMPROVEMENTS) TULSA COUNTY

SUGGESTED TRAFFIC CONTROL

DETOUR PLAN

PHASE II

JOB PIECE NO. 10981(05) SHEET NO. T012

REV. NO.	DESCRIPTION	REVISION DATE
1	REVISE DETOUR	05-13-2022

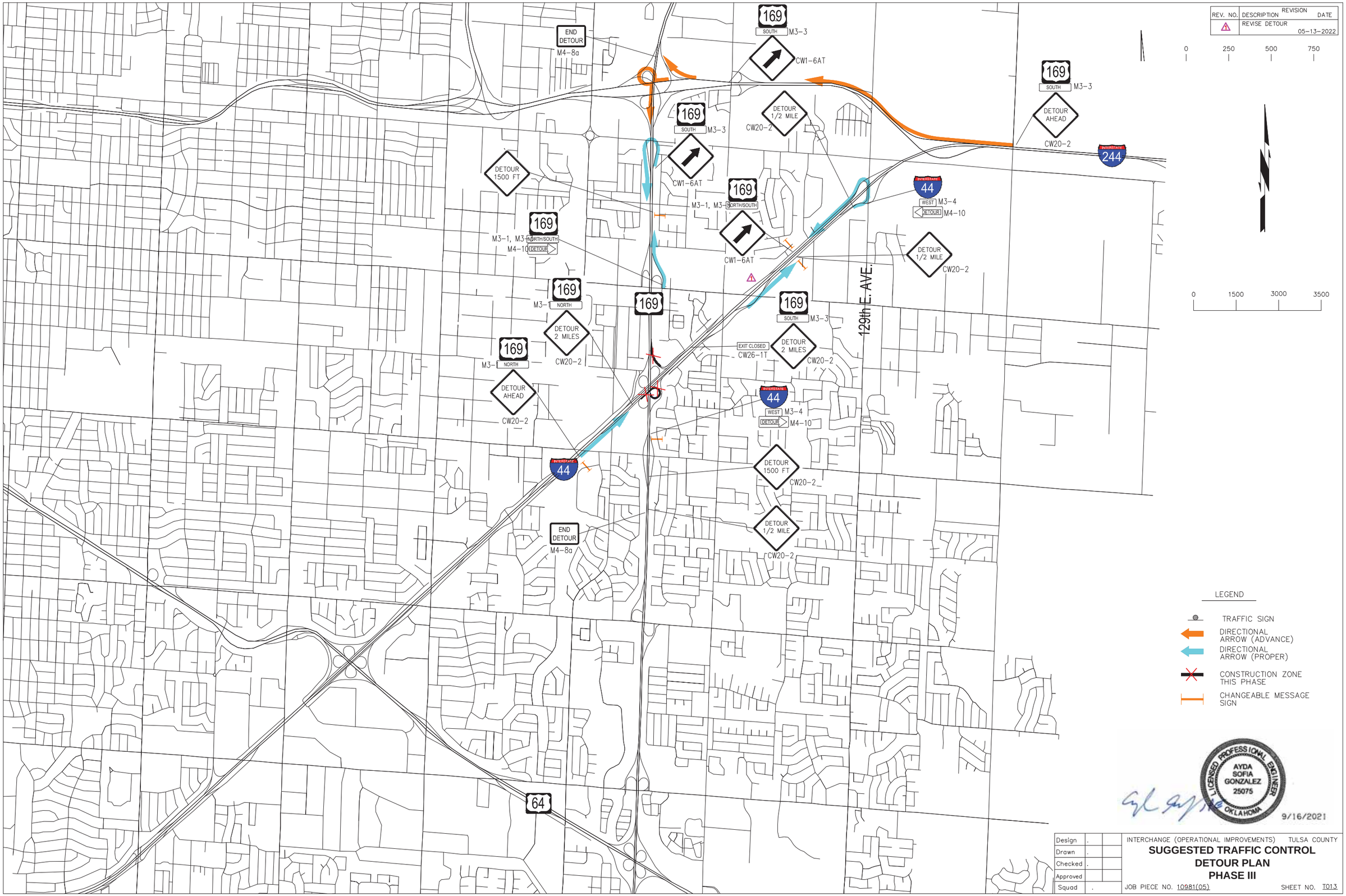

LEGEND

- TRAFFIC SIGN
- DIRECTIONAL ARROW (ADVANCE)
- DIRECTIONAL ARROW (PROPER)
- CONSTRUCTION ZONE THIS PHASE
- CHANGEABLE MESSAGE SIGN

LICENSED PROFESSIONAL ENGINEER
AYDA SOFIA GONZALEZ
25075
OKLAHOMA

9/16/2021

Design	.	
Drawn	.	
Checked	.	
Approved		
Squad	.	

INTERCHANGE (OPERATIONAL IMPROVEMENTS) TULSA COUNTY

SUGGESTED TRAFFIC CONTROL
DETOUR PLAN
PHASE III

JOB PIECE NO. 10981(05) SHEET NO. T013

END DETOUR M4-8a

169 SOUTH M3-3 DETOUR AHEAD CW20-2

INTERSTATE 244

169 SOUTH M3-3

DETOUR 1/2 MILE CW20-2

CW1-6AT

DETOUR 1500 FT

169 NORTH/SOUTH M3-1, M3-3

DETOUR M4-10

END DETOUR M4-8a

DETOUR 1/2 MILE CW20-2

169 NORTH M3-1

169

169 NORTH/SOUTH M3-1, M3-3

129th E. AVE.

DETOUR 2 MILES CW20-2

CW1-6AT

169 NORTH

169 SOUTH M3-3

DETOUR AHEAD CW20-2

INTERSTATE 44 WEST M3-4

DETOUR M4-10

DETOUR 1/2 MILE CW20-2

169 SOUTH M3-3

CW1-6AT

INTERSTATE 44

DETOUR 1500 FT CW20-2

169 SOUTH M3-3

DETOUR 1/2 MILE CW20-2

DETOUR 1/2 MILE CW20-2

INTERSTATE 44 WEST M3-4

CW1-6AT

END DETOUR M4-8a

DETOUR 1/2 MILE CW20-2E

INTERSTATE 44 WEST

64

END DETOUR M4-8a

0 1500 3000 3500

LEGEND

- TRAFFIC SIGN
- DIRECTIONAL ARROW (ADVANCE)
- DIRECTIONAL ARROW (PROPER)
- CONSTRUCTION ZONE THIS PHASE
- CHANGEABLE MESSAGE SIGN

LICENSED PROFESSIONAL ENGINEER
AYDA SOFIA GONZALEZ
25075
OKLAHOMA

9/16/2021

Design	.	
Drawn	.	
Checked	.	
Approved		
Squad	.	

INTERCHANGE (OPERATIONAL IMPROVEMENTS) TULSA COUNTY

SUGGESTED TRAFFIC CONTROL
DETOUR PLAN
PHASE IV

JOB PIECE NO. 10981(05) SHEET NO. T014

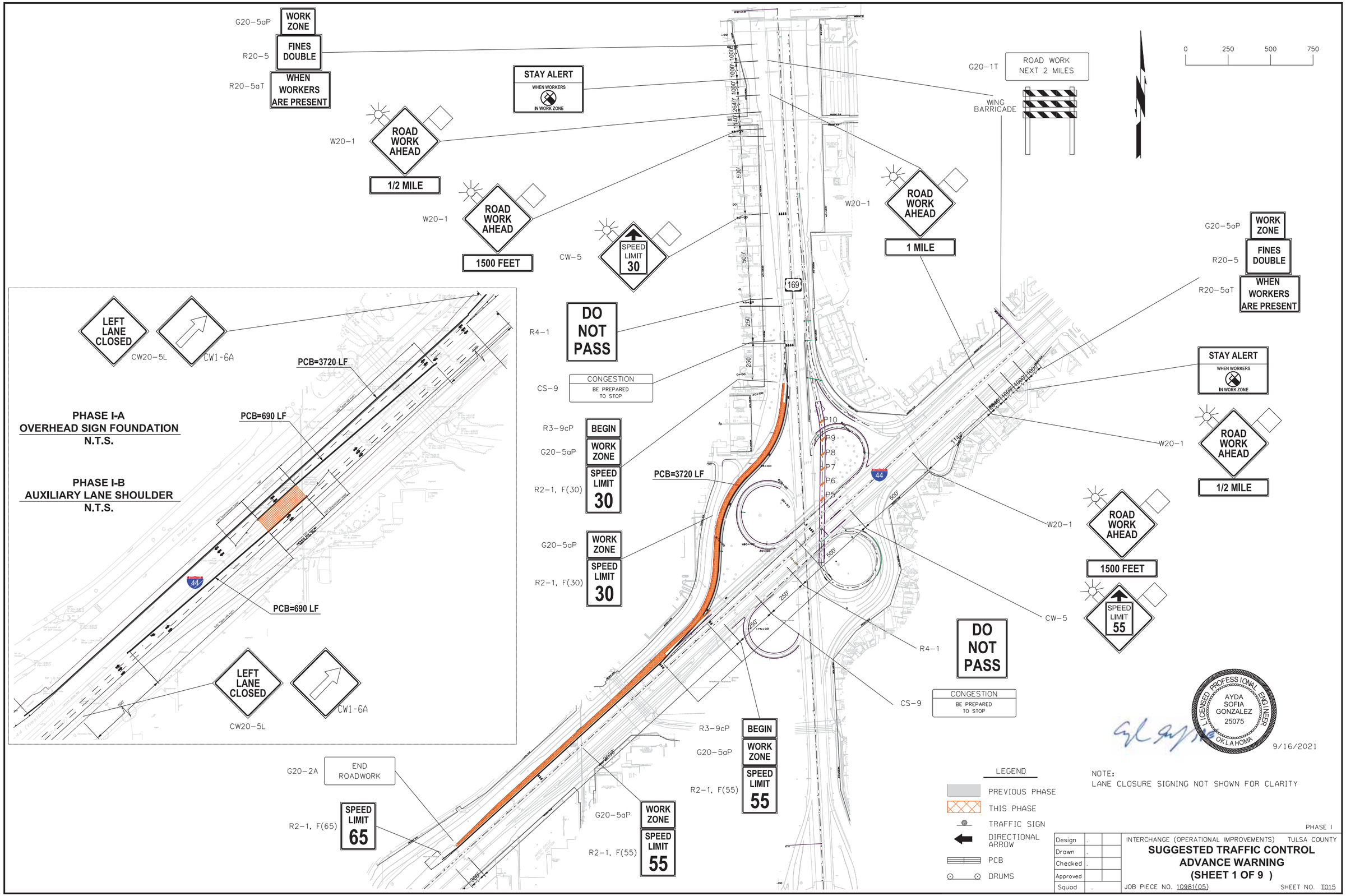
G20-5aP WORK ZONE
R20-5 FINES DOUBLE
R20-5aT WHEN WORKERS ARE PRESENT
STAY ALERT WHEN WORKERS IN WORK ZONE
W20-1 ROAD WORK AHEAD
1/2 MILE
W20-1 ROAD WORK AHEAD
1500 FEET
CW-5 SPEED LIMIT 30
R4-1 DO NOT PASS
CS-9 CONGESTION BE PREPARED TO STOP
R3-9cP BEGIN
G20-5aP WORK ZONE
R2-1, F(30) SPEED LIMIT 30
G20-5aP WORK ZONE
R2-1, F(30) SPEED LIMIT 30
PCB=3720 LF
G20-2A END ROADWORK
R2-1, F(65) SPEED LIMIT 65
G20-5aP WORK ZONE
R2-1, F(55) SPEED LIMIT 55
R3-9cP BEGIN
G20-5aP WORK ZONE
R2-1, F(55) SPEED LIMIT 55
G20-1T ROAD WORK NEXT 2 MILES
WING BARRICADE
W20-1 ROAD WORK AHEAD
1 MILE
G20-5aP WORK ZONE
R20-5 FINES DOUBLE
R20-5aT WHEN WORKERS ARE PRESENT
STAY ALERT WHEN WORKERS IN WORK ZONE
W20-1 ROAD WORK AHEAD
1/2 MILE
W20-1 ROAD WORK AHEAD
1500 FEET
CW-5 SPEED LIMIT 55
R4-1 DO NOT PASS
CS-9 CONGESTION BE PREPARED TO STOP
0 250 500 750
169
44
P10
P9
P8
P7
P6
P5
LEFT LANE CLOSED
CW20-5L
CW1-6A
PCB=3720 LF
PCB=690 LF
PHASE I-A
OVERHEAD SIGN FOUNDATION
N.T.S.
PHASE I-B
AUXILIARY LANE SHOULDER
N.T.S.
LEFT LANE CLOSED
CW20-5L
CW1-6A
PCB=690 LF
LEGEND
PREVIOUS PHASE
THIS PHASE
TRAFFIC SIGN
DIRECTIONAL ARROW
PCB
DRUMS
NOTE:
LANE CLOSURE SIGNING NOT SHOWN FOR CLARITY
LICENSED PROFESSIONAL ENGINEER
AYDA SOFIA GONZALEZ
25075
OKLAHOMA
9/16/2021
PHASE I
Design
Drawn
Checked
Approved
Squad
INTERCHANGE (OPERATIONAL IMPROVEMENTS) TULSA COUNTY
SUGGESTED TRAFFIC CONTROL
ADVANCE WARNING
(SHEET 1 OF 9)
JOB PIECE NO. 10981(05)
SHEET NO. T015

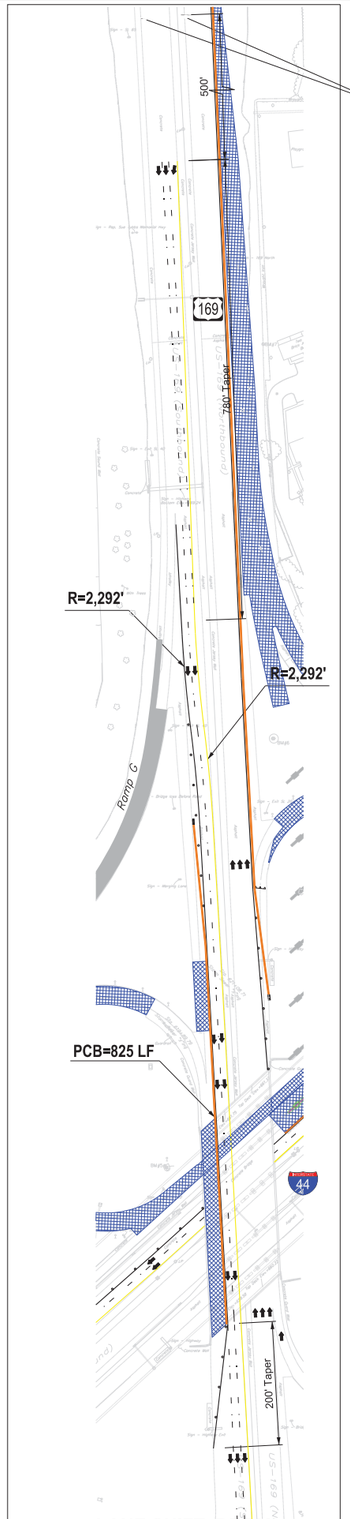

LANE SHIFT DETAIL
N.T.S.

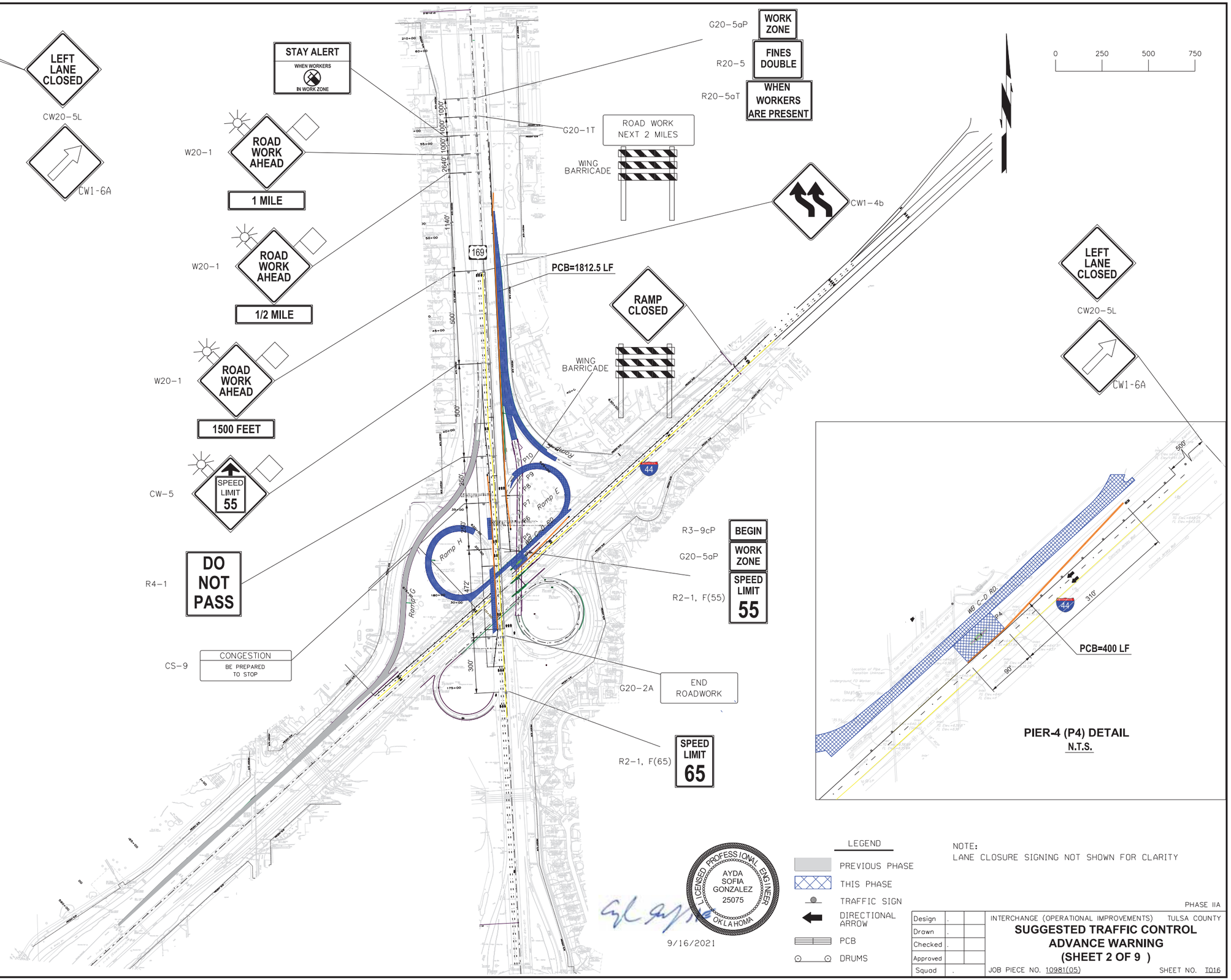

PIER-4 (P4) DETAIL
N.T.S.

LICENSED PROFESSIONAL ENGINEER
AYDA SOFIA GONZALEZ
25075
OKLAHOMA

9/16/2021

LEGEND

- PREVIOUS PHASE
- THIS PHASE
- TRAFFIC SIGN
- DIRECTIONAL ARROW
- PCB
- DRUMS

NOTE:
LANE CLOSURE SIGNING NOT SHOWN FOR CLARITY

PHASE IIA

Design	.	
Drawn	.	
Checked	.	
Approved		
Squad	.	

INTERCHANGE (OPERATIONAL IMPROVEMENTS) TULSA COUNTY

SUGGESTED TRAFFIC CONTROL ADVANCE WARNING (SHEET 2 OF 9)

JOB PIECE NO. 10981(05)

SHEET NO. T016

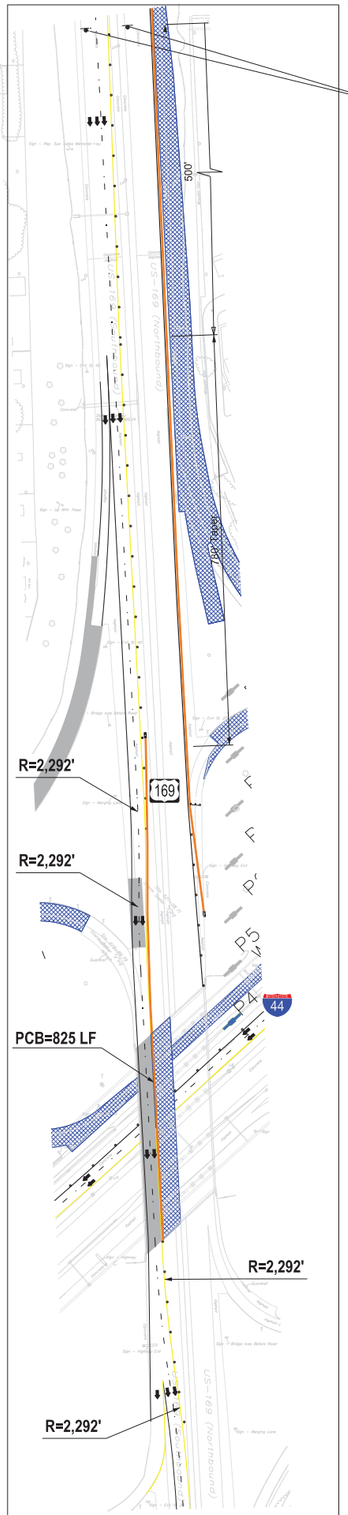

LANE SHIFT DETAIL
N.T.S.

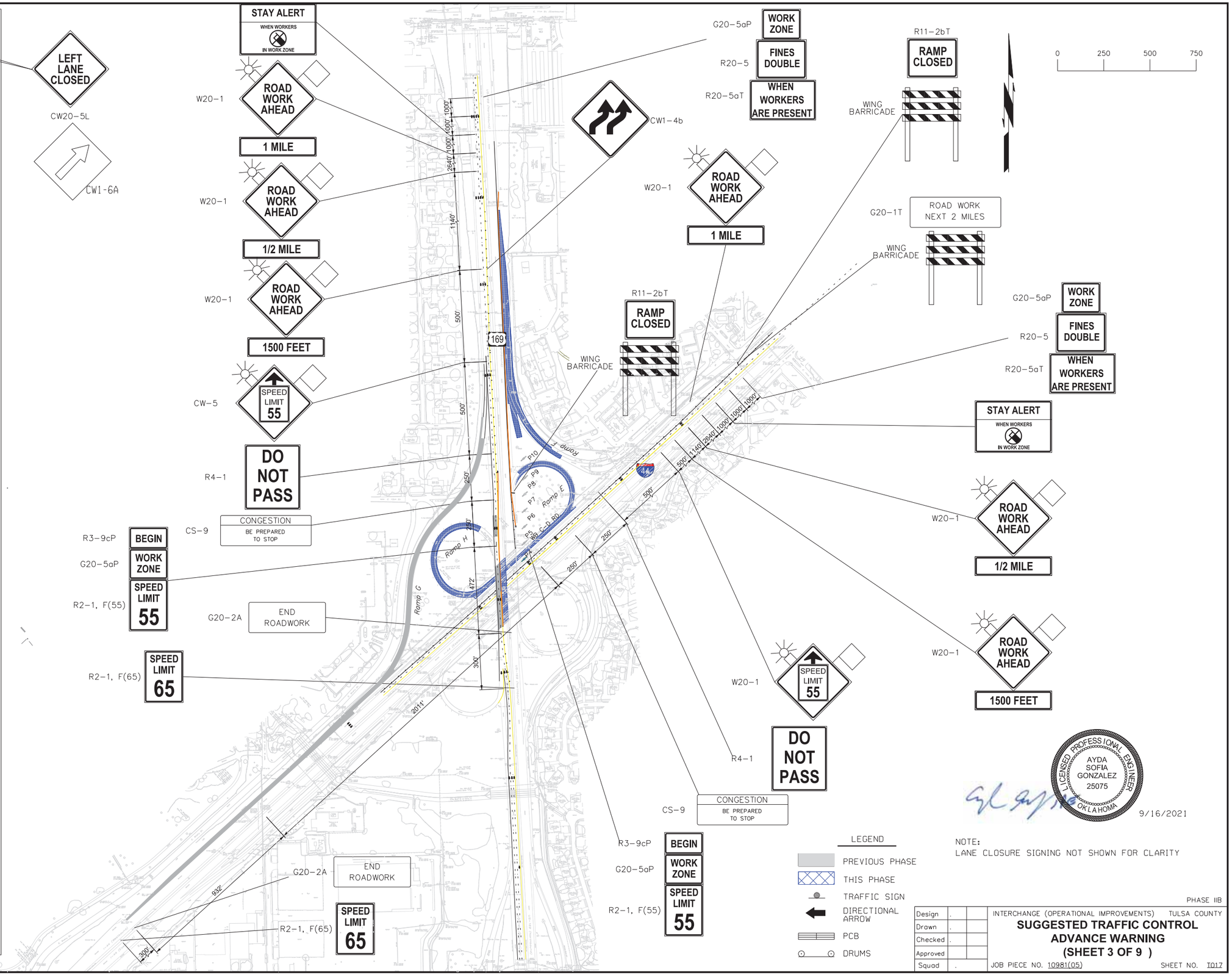

LICENSED PROFESSIONAL ENGINEER
AYDA SOFIA GONZALEZ
25075
OKLAHOMA
9/16/2021

LEGEND

- PREVIOUS PHASE
- THIS PHASE
- TRAFFIC SIGN
- DIRECTIONAL ARROW
- PCB
- DRUMS

NOTE:
LANE CLOSURE SIGNING NOT SHOWN FOR CLARITY

PHASE IIB

Design	.	
Drawn	.	
Checked	.	
Approved		
Squad	.	

INTERCHANGE (OPERATIONAL IMPROVEMENTS) TULSA COUNTY

SUGGESTED TRAFFIC CONTROL ADVANCE WARNING (SHEET 3 OF 9)

JOB PIECE NO. 10981(05) SHEET NO. T017

REV. NO.	DESCRIPTION	REVISION DATE
1	REVISE DETAIL	05-13-2022

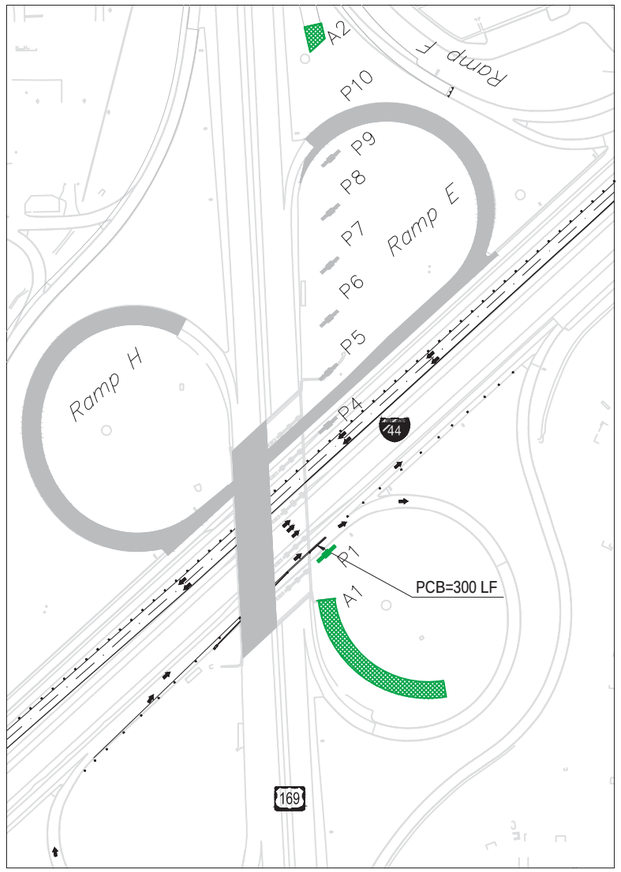

PIER 1 (P1) & ABUTMENT "A" DETAIL

N.T.S. 1

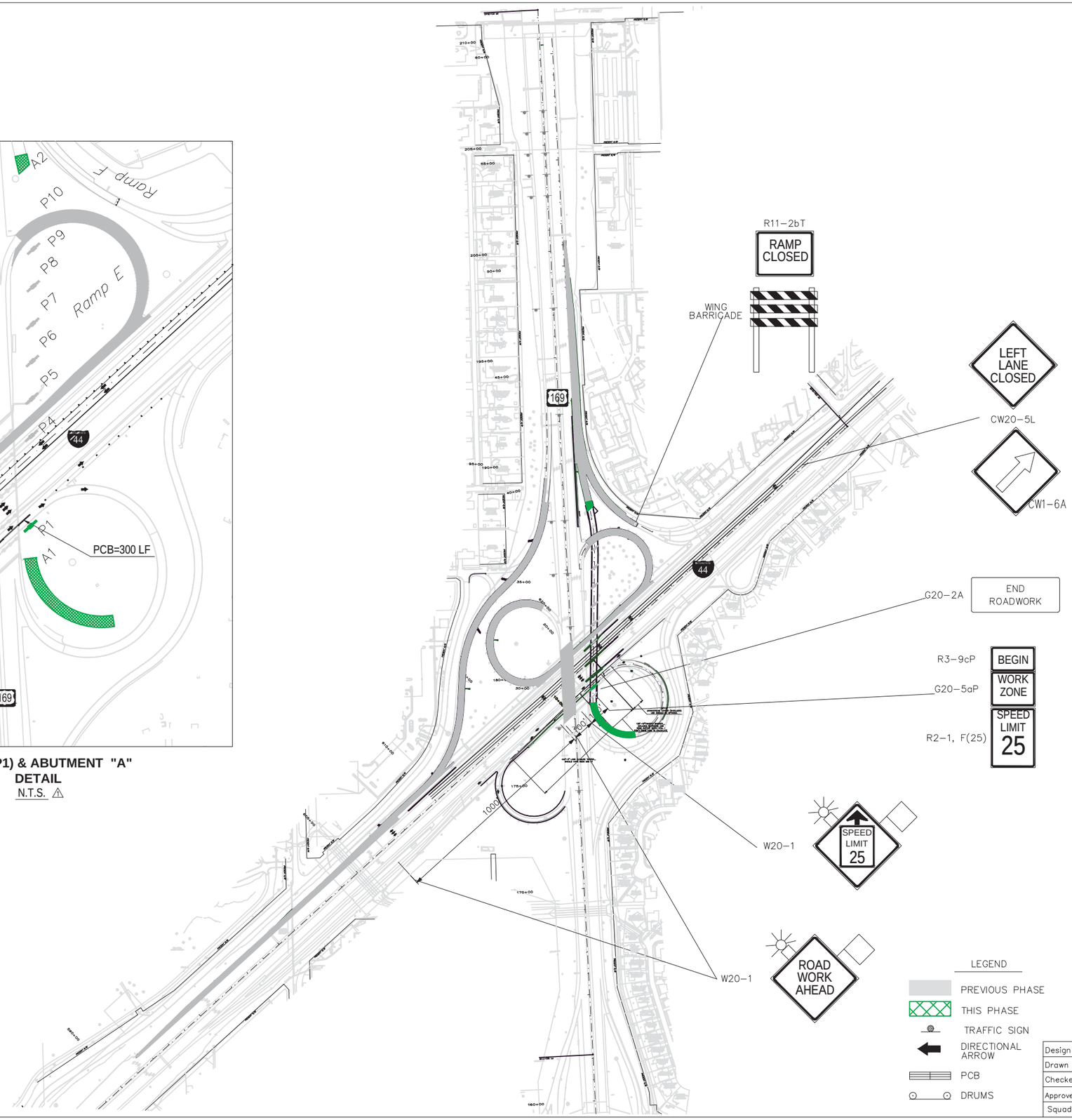

LEGEND

- PREVIOUS PHASE
- THIS PHASE
- TRAFFIC SIGN
- DIRECTIONAL ARROW
- PCB
- DRUMS

NOTE:
LANE CLOSURE SIGNING NOT SHOWN FOR CLARITY

LICENSED PROFESSIONAL ENGINEER
AYDA SOFIA GONZALEZ
25075
OKLAHOMA
9/16/2021

PHASE IIIA

Design	.	
Drawn	.	
Checked	.	
Approved		
Squad	.	

INTERCHANGE (OPERATIONAL IMPROVEMENTS) TULSA COUNTY

SUGGESTED TRAFFIC CONTROL ADVANCE WARNING (SHEET 4 OF 9)

JOB PIECE NO. 10981(05) SHEET NO. T018

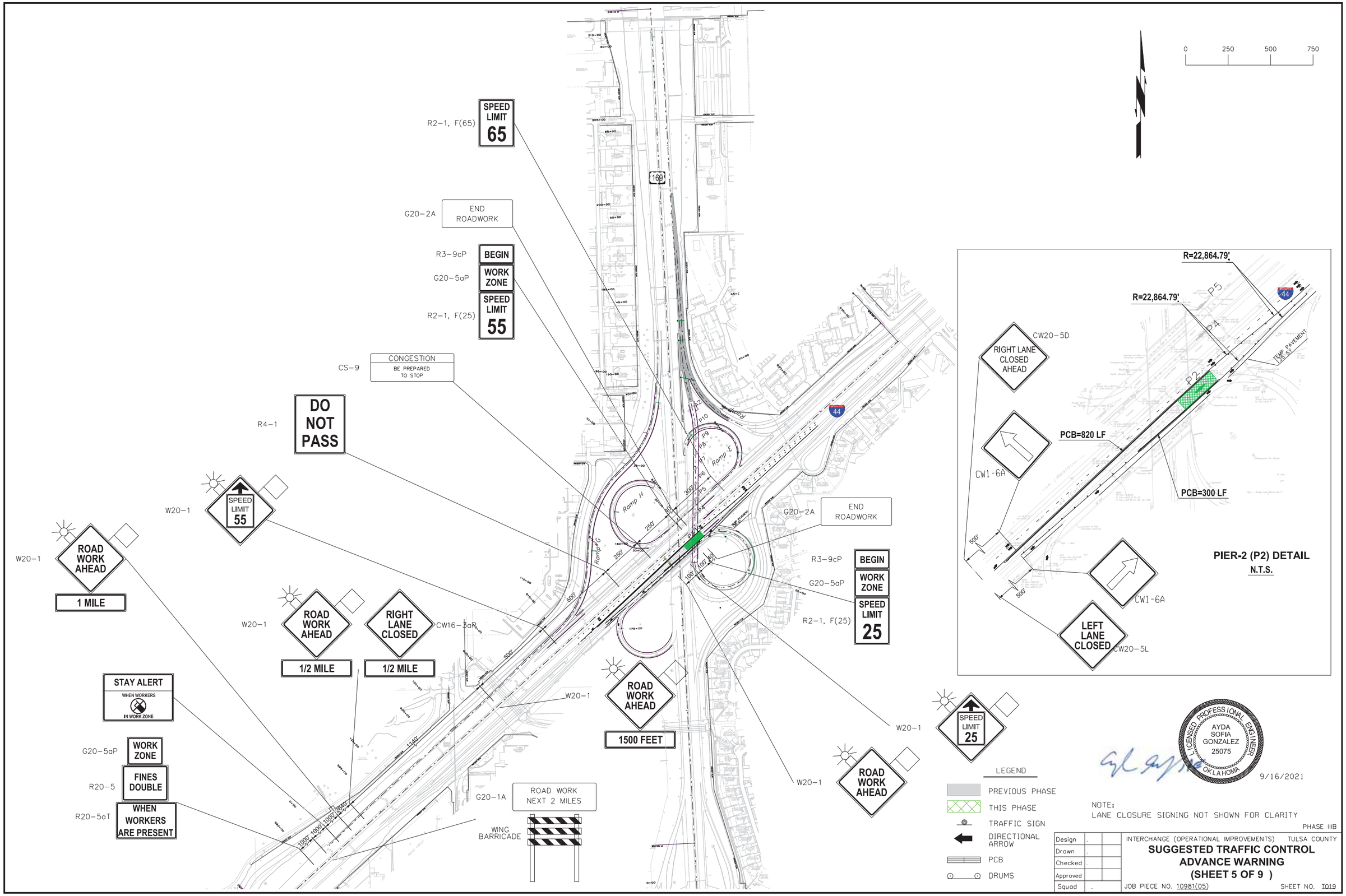

0 250 500 750
R2-1, F(65)
SPEED LIMIT 65
G20-2A
END ROADWORK
R3-9cP
BEGIN
G20-5aP
WORK ZONE
R2-1, F(25)
SPEED LIMIT 55
CS-9
CONGESTION
BE PREPARED TO STOP
R4-1
DO NOT PASS
W20-1
SPEED LIMIT 55
W20-1
ROAD WORK AHEAD
1 MILE
W20-1
ROAD WORK AHEAD
1/2 MILE
RIGHT LANE CLOSED
1/2 MILE
CW16-3aP
STAY ALERT
WHEN WORKERS IN WORK ZONE
G20-5aP
WORK ZONE
R20-5
FINES DOUBLE
R20-5aT
WHEN WORKERS ARE PRESENT
G20-1A
ROAD WORK NEXT 2 MILES
WING BARRICADE
W20-1
ROAD WORK AHEAD
1500 FEET
W20-1
ROAD WORK AHEAD
W20-1
SPEED LIMIT 25
G20-2A
END ROADWORK
R3-9cP
BEGIN
G20-5aP
WORK ZONE
R2-1, F(25)
SPEED LIMIT 25
169
44
Ramp H
Ramp E
Ramp G
R=22,864.79'
R=22,864.79'
P5
P4
P2
TEMP PAVEMENT 135 SY
CW20-5D
RIGHT LANE CLOSED AHEAD
PCB=820 LF
CW1-6A
PCB=300 LF
CW1-6A
LEFT LANE CLOSED
CW20-5L
PIER-2 (P2) DETAIL
N.T.S.
LEGEND
PREVIOUS PHASE
THIS PHASE
TRAFFIC SIGN
DIRECTIONAL ARROW
PCB
DRUMS
LICENSED PROFESSIONAL ENGINEER
AYDA SOFIA GONZALEZ
25075
OKLAHOMA
9/16/2021
NOTE:
LANE CLOSURE SIGNING NOT SHOWN FOR CLARITY
PHASE IIIB
Design
Drawn
Checked
Approved
Squad
INTERCHANGE (OPERATIONAL IMPROVEMENTS) TULSA COUNTY
SUGGESTED TRAFFIC CONTROL
ADVANCE WARNING
(SHEET 5 OF 9)
JOB PIECE NO. 10981(05)
SHEET NO. T019

PIER-3 (P3) DETAIL

N.T.S.

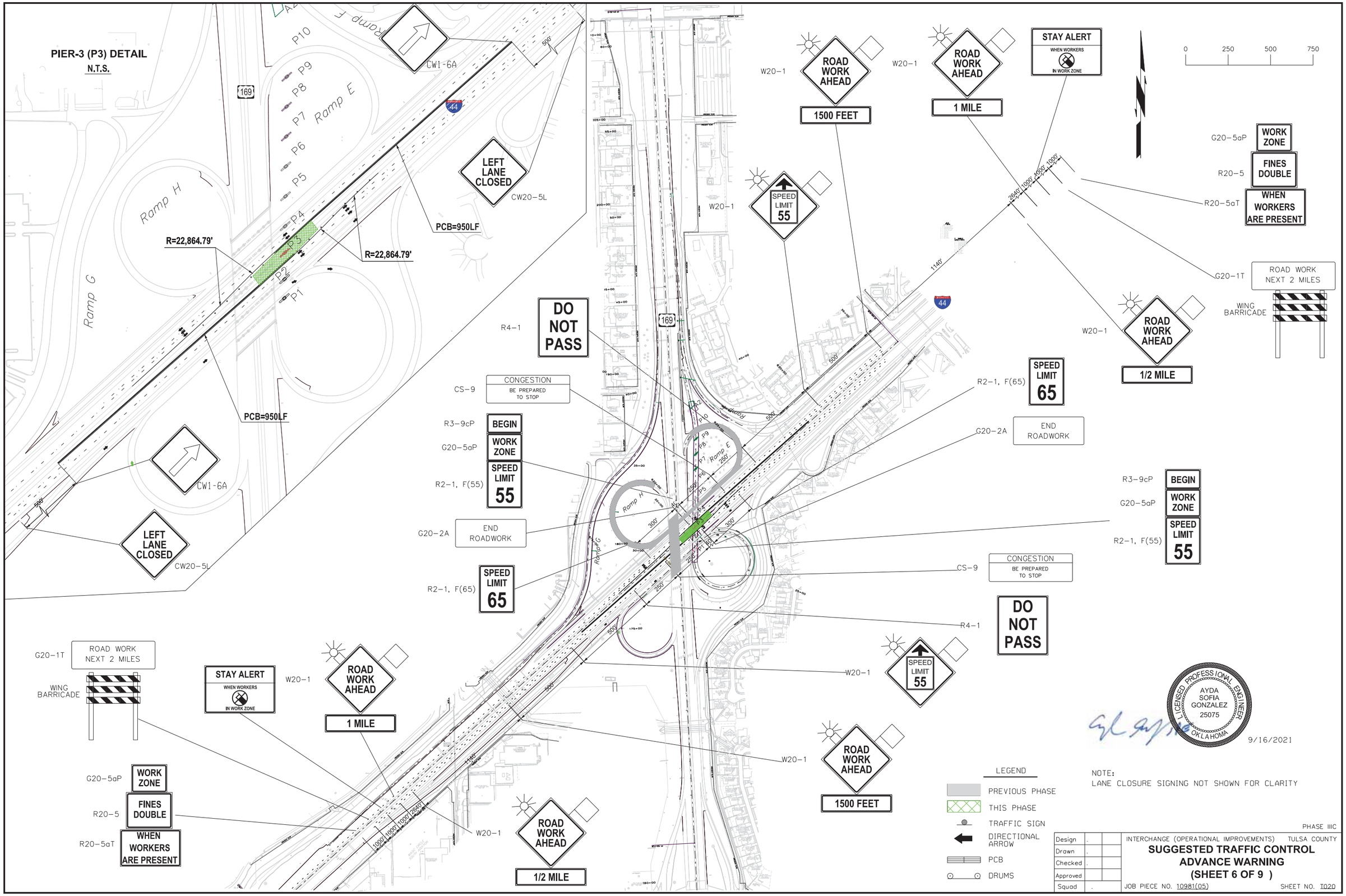

LEGEND

- PREVIOUS PHASE
- THIS PHASE
- TRAFFIC SIGN
- DIRECTIONAL ARROW
- PCB
- DRUMS

NOTE:
LANE CLOSURE SIGNING NOT SHOWN FOR CLARITY

LICENSED PROFESSIONAL ENGINEER
AYDA SOFIA GONZALEZ
25075
OKLAHOMA

9/16/2021

PHASE IIIC

Design	.	
Drawn	.	
Checked	.	
Approved		
Squad	.	

INTERCHANGE (OPERATIONAL IMPROVEMENTS) TULSA COUNTY

SUGGESTED TRAFFIC CONTROL ADVANCE WARNING (SHEET 6 OF 9)

JOB PIECE NO. 10981(05)

SHEET NO. T020

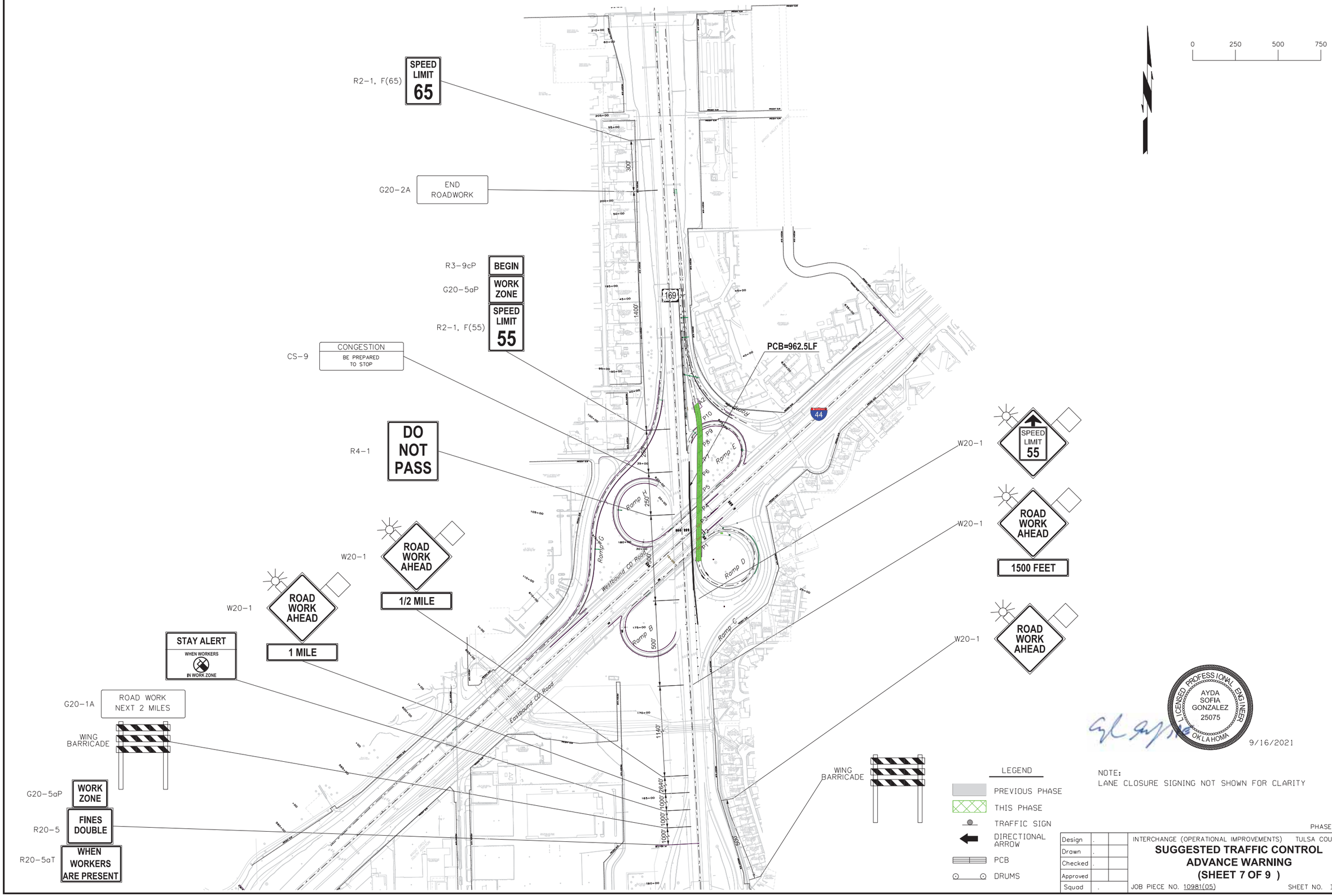

0
250
500
750
R2-1, F(65)
SPEED LIMIT 65
G20-2A
END ROADWORK
R3-9cP
BEGIN
G20-5aP
WORK ZONE
R2-1, F(55)
SPEED LIMIT 55
CS-9
CONGESTION
BE PREPARED TO STOP
R4-1
DO NOT PASS
W20-1
ROAD WORK AHEAD
1/2 MILE
W20-1
ROAD WORK AHEAD
1 MILE
STAY ALERT
WHEN WORKERS IN WORK ZONE
G20-1A
ROAD WORK NEXT 2 MILES
WING BARRICADE
G20-5aP
WORK ZONE
R20-5
FINES DOUBLE
R20-5aT
WHEN WORKERS ARE PRESENT
PCB=962.5LF
169
44
Ramp E
Ramp H
Ramp G
Ramp D
Ramp B
Ramp C
Westbound CD Road
Eastbound CD Road
W20-1
SPEED LIMIT 55
W20-1
ROAD WORK AHEAD
1500 FEET
W20-1
ROAD WORK AHEAD
WING BARRICADE
LICENSED PROFESSIONAL ENGINEER
AYDA SOFIA GONZALEZ
25075
OKLAHOMA
9/16/2021
LEGEND
PREVIOUS PHASE
THIS PHASE
TRAFFIC SIGN
DIRECTIONAL ARROW
PCB
DRUMS
NOTE:
LANE CLOSURE SIGNING NOT SHOWN FOR CLARITY
PHASE IIID
Design
Drawn
Checked
Approved
Squad
INTERCHANGE (OPERATIONAL IMPROVEMENTS) TULSA COUNTY
SUGGESTED TRAFFIC CONTROL
ADVANCE WARNING
(SHEET 7 OF 9)
JOB PIECE NO. 10981(05)
SHEET NO. T021

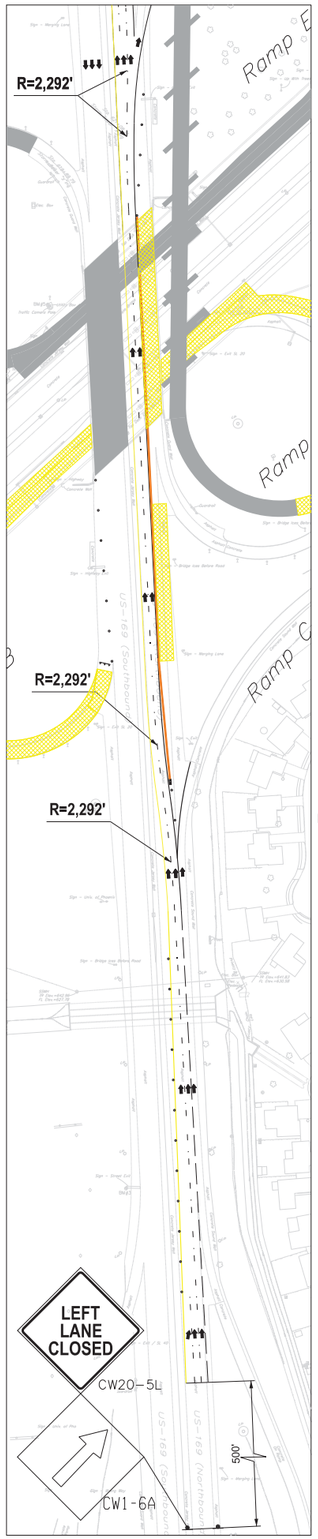

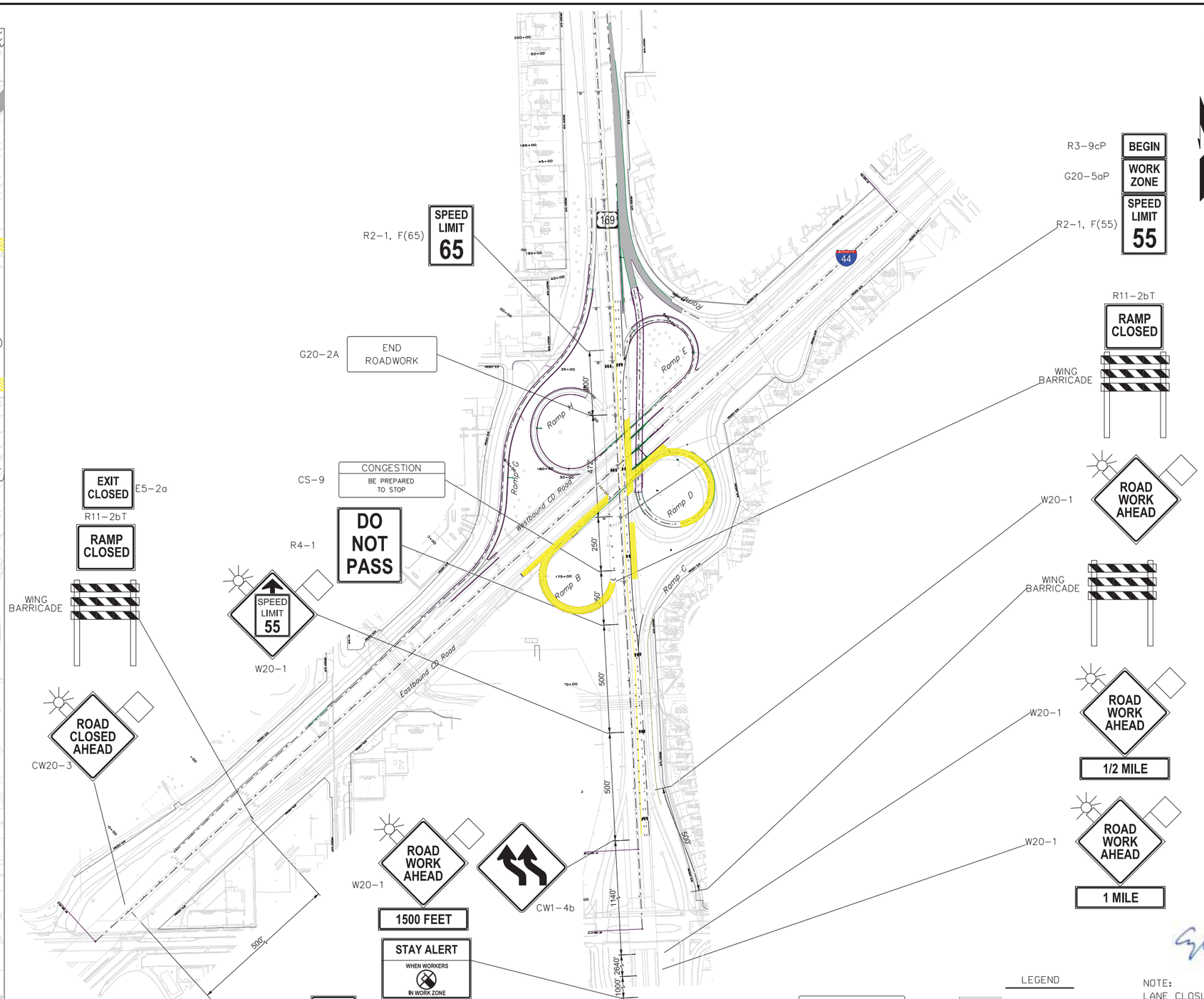

LANE SHIFT DETAIL
N.T.S.

LEGEND

- PREVIOUS PHASE
- THIS PHASE
- TRAFFIC SIGN
- DIRECTIONAL ARROW
- PCB
- DRUMS

NOTE:
LANE CLOSURE SIGNING NOT SHOWN FOR CLARITY

LICENSED PROFESSIONAL ENGINEER
AYDA SOFIA GONZALEZ
25075
OKLAHOMA
9/16/2021

PHASE IVA

Design	.	
Drawn	.	
Checked	.	
Approved		
Squad	.	

INTERCHANGE (OPERATIONAL IMPROVEMENTS) TULSA COUNTY

SUGGESTED TRAFFIC CONTROL ADVANCE WARNING (SHEET 8 OF 9)

JOB PIECE NO. 10981(05) SHEET NO. T022

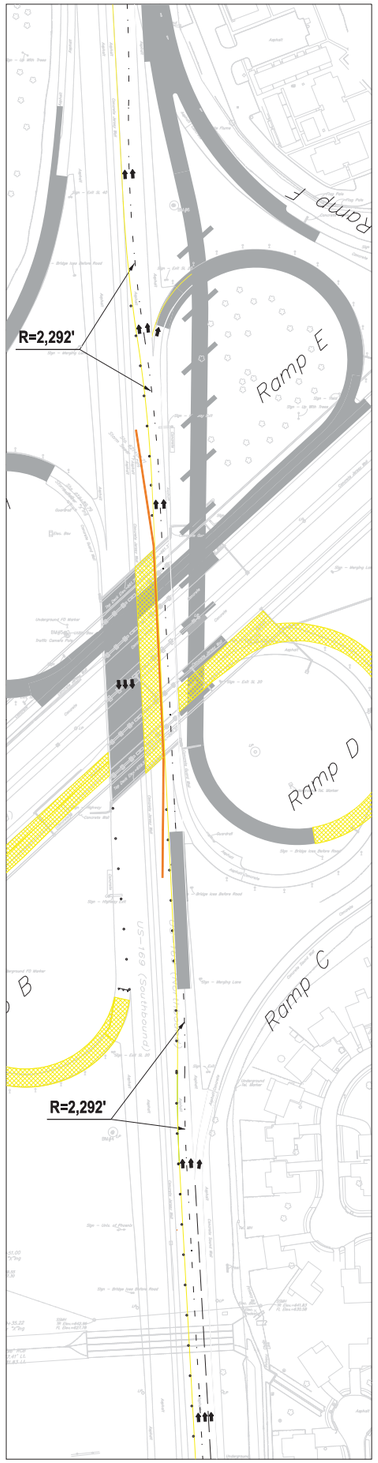

LANE SHIFT DETAIL

N.T.S.

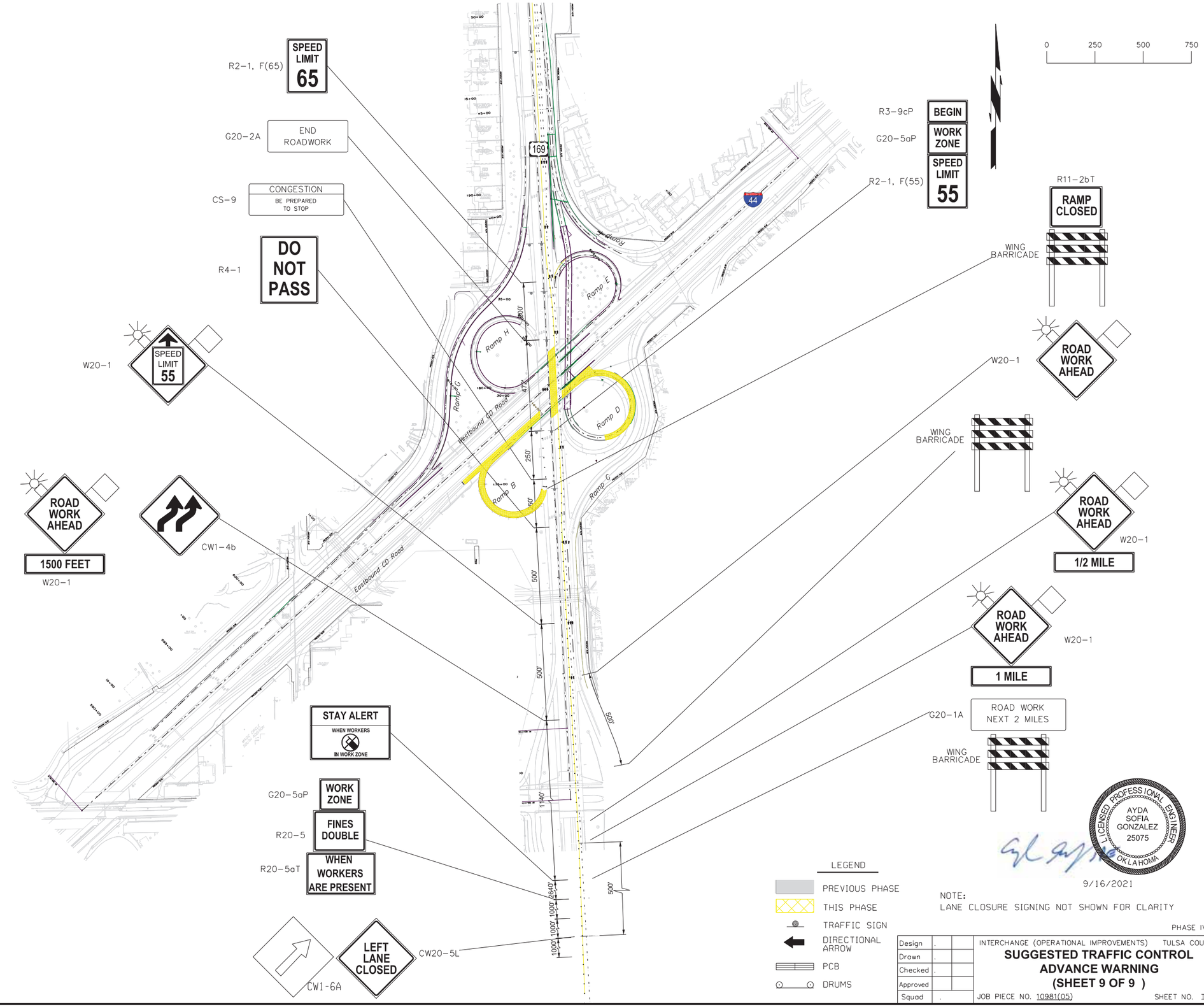

LEGEND

- PREVIOUS PHASE
- THIS PHASE
- TRAFFIC SIGN
- DIRECTIONAL ARROW
- PCB
- DRUMS

LICENSED PROFESSIONAL ENGINEER
AYDA SOFIA GONZALEZ
25075
OKLAHOMA

9/16/2021

NOTE:
LANE CLOSURE SIGNING NOT SHOWN FOR CLARITY

PHASE IVB

Design	.	
Drawn	.	
Checked	.	
Approved		
Squad	.	

INTERCHANGE (OPERATIONAL IMPROVEMENTS) TULSA COUNTY

SUGGESTED TRAFFIC CONTROL ADVANCE WARNING (SHEET 9 OF 9)

JOB PIECE NO. 10981(05) SHEET NO. I023

REVISIONS		
NO.	DESCRIPTION	DATE

LIGHT POLE / TOWER SCHEDULE

LOCATION					FOOTING					POLE ASSEMBLY								
SHEET NO.	POLE NO.	STATION (CTR. OR REF. LINE)			DISTANCE FROM EDGE OF TRAVEL LANE FT	TYPE	STRL. STL 804(B) CY	CLASS 'AA' CONC. 509(A) CY	DRILLED SHAFT LF	4" CONC. SIDEWALK 610(A) SY	B.BASE DESIGN NO.	POLE LENGTH FT	ARM NO. 1 FT	ARM NO. 2 FT	NO./WATTS EA/WATT	IES DIST. TYPE	1/C NO 12 AWG TYPE THW FT	LIGHTNING ARRESTOR EA	REMARKS
T026	1	41+75	CL	(RAMP F)		BARRIER/MSE WALL	SEE NOTE 2 BELOW					40	10		1 - 255	MF4	125	1	SEE HLBP1-1-01 & BMF3-2-00
T026	2	43+75	CL	(RAMP F)		BARRIER/MSE WALL	SEE NOTE 2 BELOW					40	10		1 - 255	MF4	125		SEE HLBP1-1-01 & BMF3-2-00
T026	3	45-75	CL	(RAMP F)		BARRIER WALL	SEE NOTE 1 BELOW					40	10		1 - 255	MF4	125	1	SEE HLBP1-1-01 & BMF3-2-00
T026	4	47+75	CL	(RAMP F)		BARRIER WALL	SEE NOTE 1 BELOW					40	10		1 - 255	MF4	125	1	SEE HLBP1-1-01 & BMF3-2-00
T027	5	UNDERPASS LIGHT		I-44	PIER CAP										1-105	MS3			SEE UPD1-1-00
T027	6	UNDERPASS LIGHT		I-44	PIER CAP										1-105	MS3			SEE UPD1-1-00
T027	7	UNDERPASS LIGHT		I-44	PIER CAP										1-105	MS3			SEE UPD1-1-00
T027	8	UNDERPASS LIGHT		I-44	PIER CAP										1-105	MS3			SEE UPD1-1-00
T027	9	UNDERPASS LIGHT		I-44	PIER CAP										1-105	MS3			SEE UPD1-1-00
T027	10	UNDERPASS LIGHT		I-44	PIER CAP										1-105	MS3			SEE UPD1-1-00
T026	TOWER 1	187+31	CL	US-169	97' RIGHT		2,653.00	16.28	35	21		130			6-1,000	AREA WIDE			SEE HMF1-1-00 & HMP1-1-00
						TOTALS	2653.00	16.28	35.00	21.00		4 - 40' MH OVAL POLES 1 -130' TOWER POLE			6-105 4-255 6-1000		500	3	

NOTE 1 - QUANTITIES CARRIED IN THE ROADWAY PLANS.

NOTE 2 - QUANTITIES CARRIED IN THE MSE WALL PLANS.

R. WAYNE RUSSELL, P.E. # 16030
C.A. # 1160, RENEWAL 06-30-23

8-18-21
DATE

Traffic Engineering Consultants, Inc.
6000 S. Western Ave., Suite 300 - Oklahoma City, OK 73139,
Ph: 405-720-7721, Web: www.tecusa.com

REGISTERED PROFESSIONAL ENGINEER R. WAYNE RUSSELL 16030 OKLAHOMA

Design	RWR	09-17-21
Drawn	SB	09-17-21

TEC A CLEAR DIRECTION

LIGHTING SCHEDULES

State Job No. 10981(05) Sheet No. T024

TULSA COUNTY

09-17-21 G:\0Projects\1-24920 Lighting, EC-1710, I-44 & US 169 Interchange - Tulsa County, OK\CAD\T024-I098105-LIGHT SCH.dgn

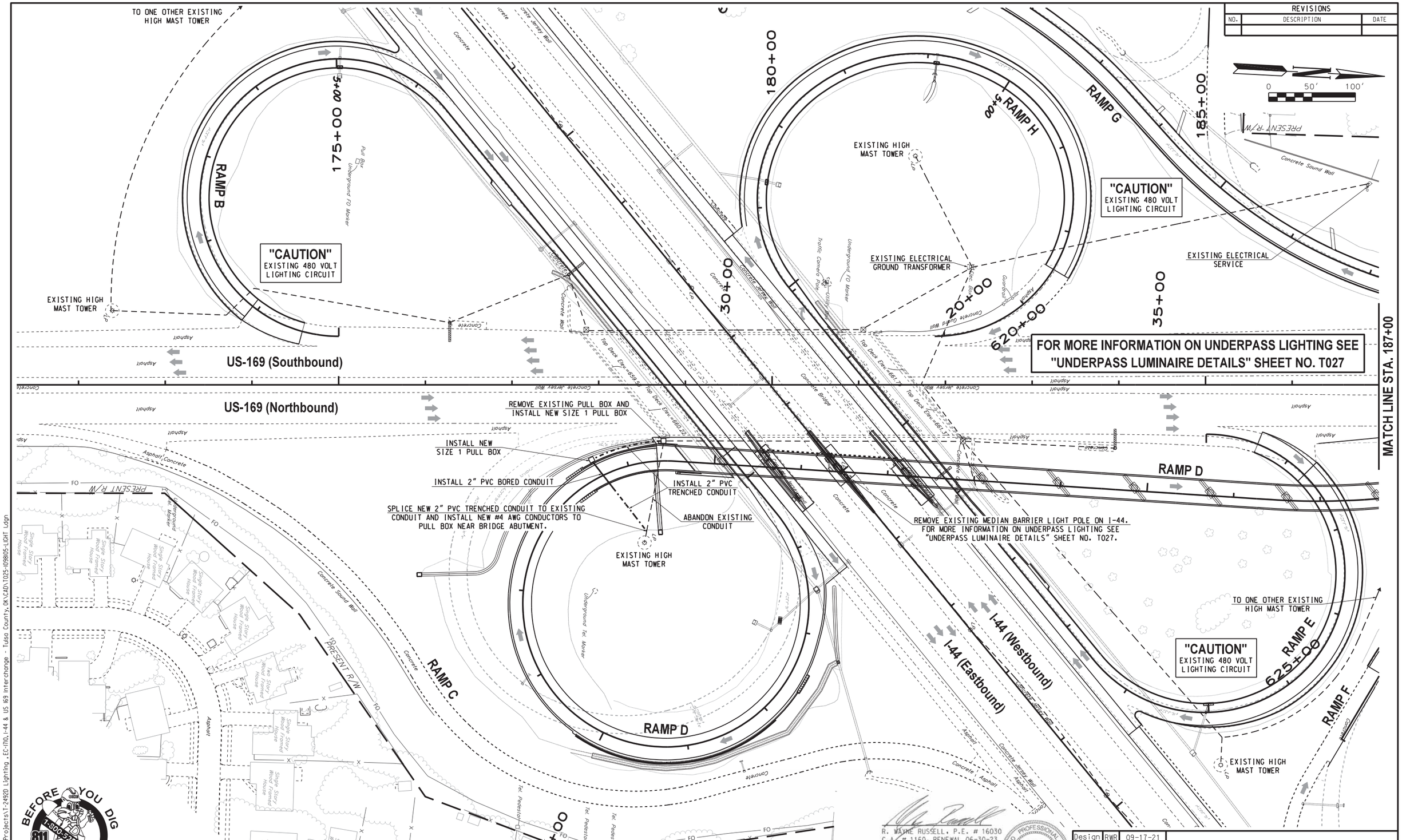

REVISIONS		
NO.	DESCRIPTION	DATE

BEFORE YOU DIG CALL OKIE 811 1-800-522-OKIE

LOCATION OF EXISTING ELECTRICAL CONDUIT/CIRCUITS IS A REPRESENTATION ONLY.
CONTRACTOR TO VERIFY IN THE FIELD OF EXACT CONDUIT/CIRCUIT LOCATIONS.

R. WAYNE RUSSELL, P.E. # 16030
C.A. # 1160, RENEWAL 06-30-23

8-18-21
DATE

Traffic Engineering Consultants, Inc.
6000 S. Western Ave., Suite 300 - Oklahoma City, OK 73139,
Ph: 405-720-7721, Web: www.tecusa.com

REGISTERED PROFESSIONAL ENGINEER R. WAYNE RUSSELL 16030 OKLAHOMA

Design	RWR	09-17-21
Drawn	SB	09-17-21

TEC A CLEAR DIRECTION

LIGHTING MODIFICATION PLAN

State Job No. 10981(05) Sheet No. T025

TULSA COUNTY

09-17-21 G:\OIProjects\T-24920 Lighting ,EC-1710,I-44 & US 169 Interchange - Tulsa County,OK\CAD\T025-109805-LIGHT 1.dgn

REVISIONS		
NO.	DESCRIPTION	DATE

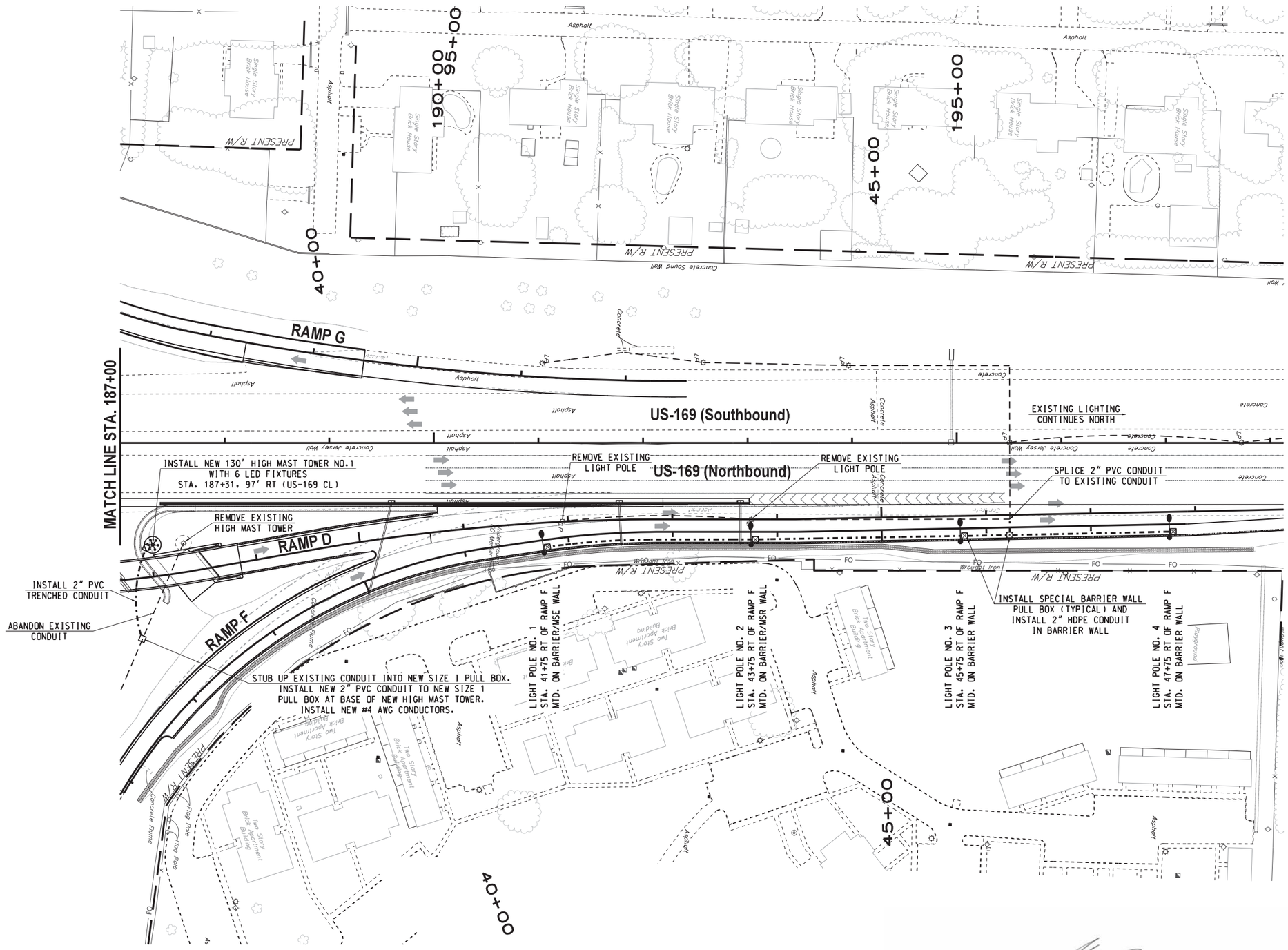

LOCATION OF EXISTING ELECTRICAL CONDUIT/CIRCUITS IS A REPRESENTATION ONLY. CONTRACTOR TO VERIFY IN THE FIELD OF EXACT CONDUIT/CIRCUIT LOCATIONS.

R. WAYNE RUSSELL, P.E. # 16030
C.A. # 1160, RENEWAL 06-30-23

8-18-21
DATE

PROFESSIONAL ENGINEER R. WAYNE RUSSELL 16030 OKLAHOMA

Traffic Engineering Consultants, Inc.
6000 S. Western Ave., Suite 300 - Oklahoma City, OK 73139,
Ph: 405-720-7721, Web: www.tecusa.com

Design	RWR	09-17-21
Drawn	SB	09-17-21

TEC A CLEAR DIRECTION

LIGHTING & SIGNING MODIFICATION PLAN

State Job No. 10981(05) Sheet No. T026

TULSA COUNTY

09-17-21 G:\OIProjects\T-24920 Lighting, LEC-170, I-44 & US 169 Interchange - Tulsa County, OK\CAD\T026-109805-LIGHT 2.dgn

REVISIONS		
NO.	DESCRIPTION	DATE

US-169 (Northbound)

"A"

INSTALL JUNCTION BOX (12"x12"x8") ON BACK OF PARAPET WALL

INSTALL 1 1/4" GALV. STL. CONDUIT CLAMPED BACK OF PARAPET WALL

INSTALL 3/4" FLEX. CONDUIT OVER PIER CAP TO LUMINAIRE AND TO JCT. BOX

INSTALL 1 1/4" FLEX. CONDUIT TO JCT. BOX

INSTALL 3/4" GALV. STL. CONDUIT CLAMPED TO FACE OF PIER TO LUMINAIRE

INSTALL JUNCTION BOX (12"x12"x8") ON BACK OF PARAPET WALL

INSTALL 1 1/4" GALV. STL. CONDUIT CLAMPED TO FACE OF PIER TO JCT. BOX

INSTALL JUNCTION BOX (12"x12"x8") HIGH ON FACE OF PIER CAP

INSTALL 1 1/4" EXPOSED GALV. STL. CONDUIT UP PIER TO JCT. BOX.

REMOVE EXISTING I-44 MEDIAN BARRIER LIGHT POLE.

INSTALL 3/4" FLEX. CONDUIT OVER PIER CAP TO LUMINAIRE

INSTALL 3/4" GALV. STL. CONDUIT CLAMPED TO FACE OF PIER TO LUMINAIRE

INSTALL 2" HDPE CONDUIT IN WALL TO PIER AT TOP OF NEW BARRIER WALL

INSTALL 1 1/4" GALV. STL. CONDUIT CLAMPED BACK OF PARAPET WALL

INSTALL JUNCTION BOX (12"x12"x8") ON BACK OF PARAPET WALL

INSTALL 3/4" FLEX. CONDUIT OVER PIER CAP TO LUMINAIRE AND TO JCT. BOX

INSTALL 3/4" GALV. STL. CONDUIT CLAMPED TO FACE OF PIER TO LUMINAIRE

30+00

31+00

RAMP D

32+00

INSTALL TWO LED UNDERPASS LUMINARES MOUNTED HIGH ON FACE OF PIER CAP, 2' FROM END OF PIER CAP

INSTALL TWO LED UNDERPASS LUMINARES MOUNTED HIGH ON FACE OF PIER CAP, 2' FROM END OF PIER CAP

INSTALL TWO LED UNDERPASS LUMINARES MOUNTED HIGH ON FACE OF PIER CAP, 2' FROM END OF PIER CAP

SPLICE TO EX. CONDUIT WITH NEW 2" HDPE CONDUIT IN BARRIER WALL

I-44 (Eastbound)

I-44 (Westbound)

0 10' 20'

INSTALL JCT. BOX (12"x12"x8") ON BACK OF PARAPET

INSTALL 1 1/4" GALV. STL. EXPOSED CONDUIT ACROSS BRIDGE CLAMPED TO BACK OF PARAPET WALL

BACK SIDE OF PARAPET WALL WITH RAILING

1 1/4" LIQUIDTIGHT FLEXIBLE METAL CONDUIT BETWEEN JCT. BOXES AT CENTER PIER. 3/4" LIQUIDTIGHT FLEXIBLE METAL CONDUIT TO LUMINAIRES AT THE TWO OUTSIDE PIERS.

3/4" LIQUIDTIGHT FLEXIBLE METAL CONDUIT TO UNDERPASS LUMINAIRE

INSTALL JUNCTION BOX (12"x12"x8") MOUNTED HIGH ON FACE OF PIER CAP ON CENTER PIER

UNDERPASS LUMINAIRE MOUNTED HIGH ON FACE OF PIER CAP

1 1/4" GALV STL. EXPOSED CONDUIT (CIRCUIT A & B) CLAMPED TO PIER COLUMN ON CENTER PIER

NEW PIER COLUMN AND CAP

INSTALL 2" HDPE CONDUIT IN BARRIER WALL AND SPLICE TO EXISTING 2" CONDUIT FROM MAINLINE LIGHTING CIRCUIT AT CENTER MEDIAN

I-44 WEST BOUND

I-44 EAST BOUND

SECTION VIEW "A-A"

R. WAYNE RUSSELL, P.E. # 16030
C.A. # 1160, RENEWAL 06-30-23

8-18-21
DATE

REGISTERED PROFESSIONAL ENGINEER R. WAYNE RUSSELL 16030 OKLAHOMA

Traffic Engineering Consultants, Inc.
6000 S. Western Ave., Suite 300 - Oklahoma City, OK 73139,
Ph: 405-720-7721, Web: www.tecusa.com

Design	RWR	09-17-21
Drawn	SB	09-17-21

TEC A CLEAR DIRECTION

UNDERPASS LUMINAIRE DETAILS

State Job No. 10981(05) Sheet No. T027

TULSA COUNTY

09-17-21 G:\OIProjects\T-24920 Lighting, I-44 & US 169 Interchange - Tulsa County, OK\CAD\T027-109805-UNDERPASS.dgn

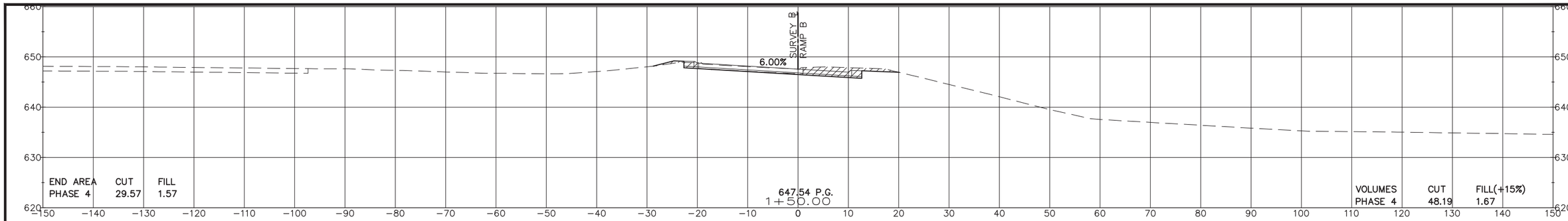

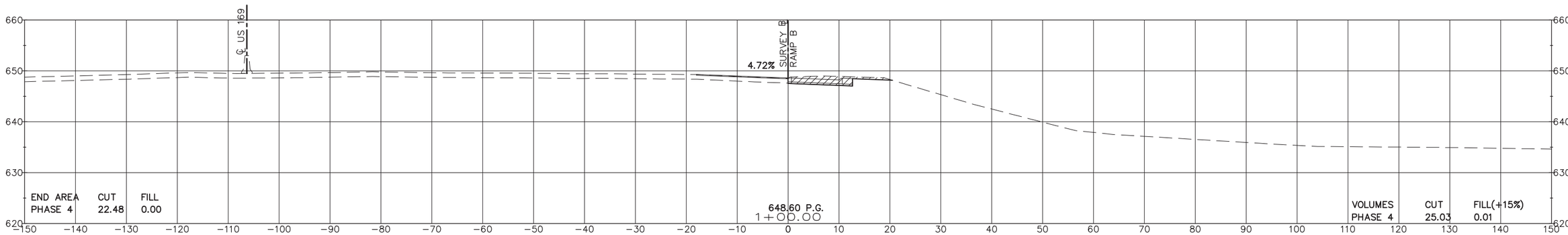

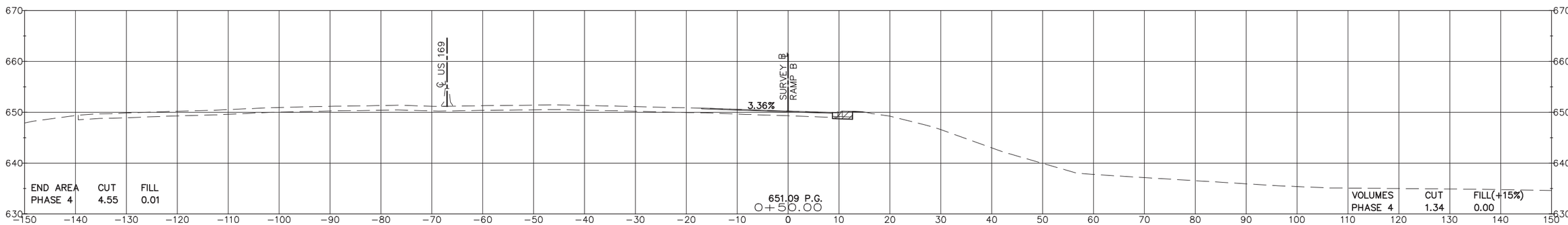

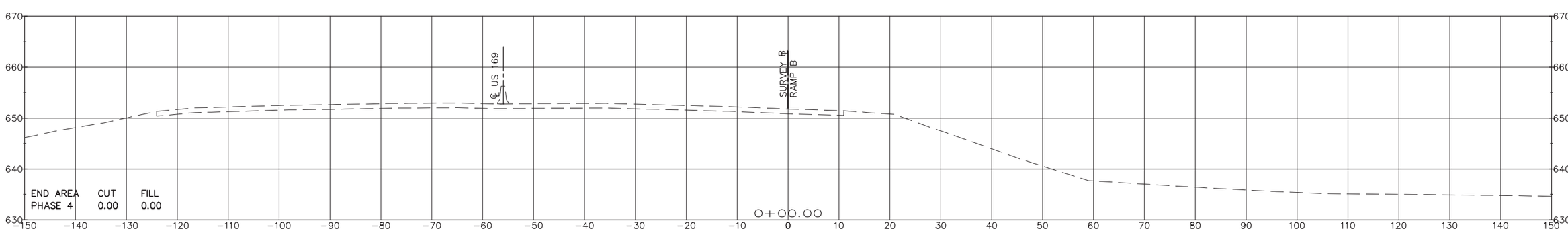

BEGIN CONSTRUCTION STA 0+42.59

PHASE 4

Survey	CKS	
Drawn	CKD	
Checked	CKE	
Approved		
Squad	C & K	

INTERCHANGE (OPERATIONAL IMPROVEMENTS) TULSA COUNTY

RAMP B

STA. 0+00.00 TO STA. 1+50.00

JOB PIECE NO. 10981(05) SHEET NO. X001

S:\Projects\ODOT\2015 EC-1710 I-44-169 Interchange\ACAD\PS&E\Plans\X001-X007-1098105-RAMP B.dwg, X001, 9/17/2021 3:13:18 PM

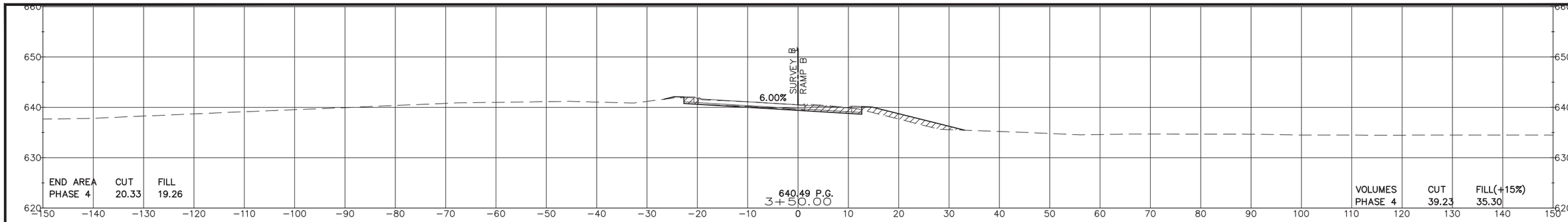

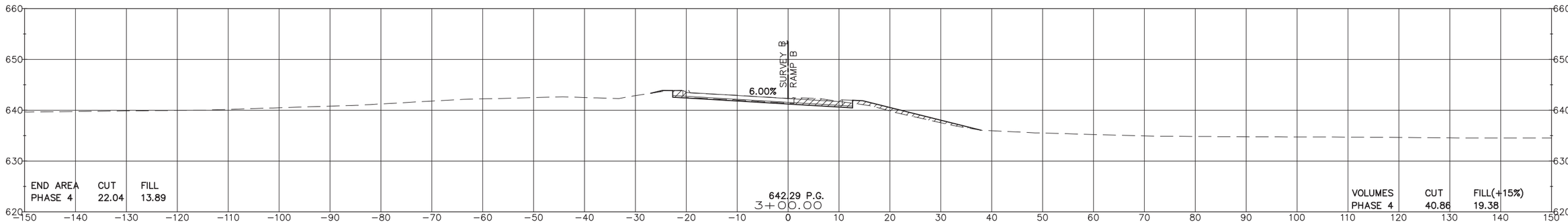

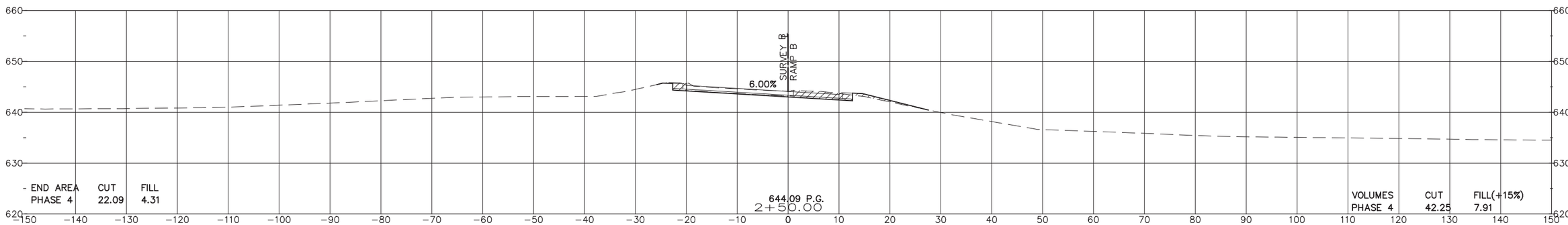

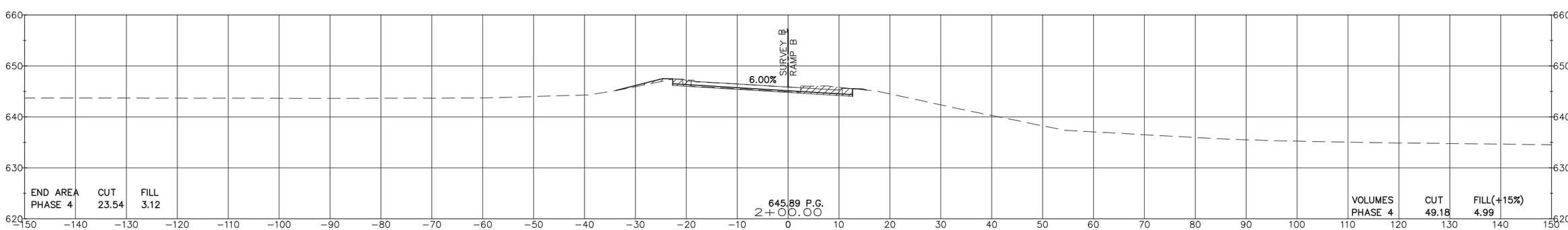

Survey	CKS	
Drawn	CKD	
Checked	CKE	
Approved		
Squad	C & K	

INTERCHANGE (OPERATIONAL IMPROVEMENTS) TULSA COUNTY

RAMP B

STA. 2+00.00 TO STA. 3+50.00

JOB PIECE NO. 10981(05) SHEET NO. X002

S:\Projects\ODOT\2015 EC-1710 I-44-169 Interchange\ACAD\PS&E\Plans\X001-X007-1098105-RAMP B.dwg, X002, 9/17/2021 3:13:22 PM

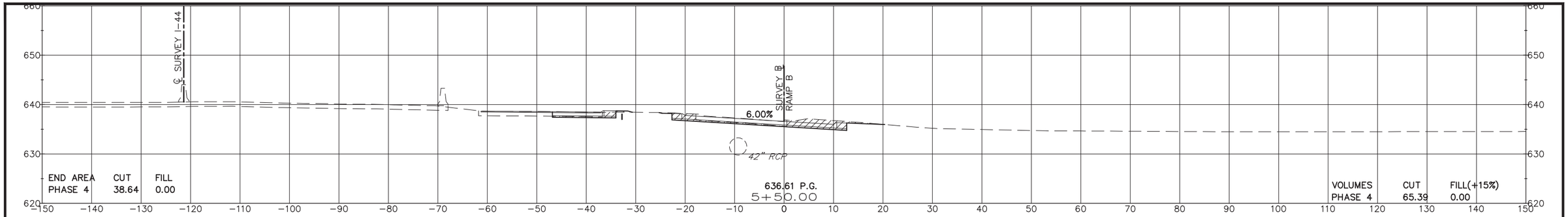

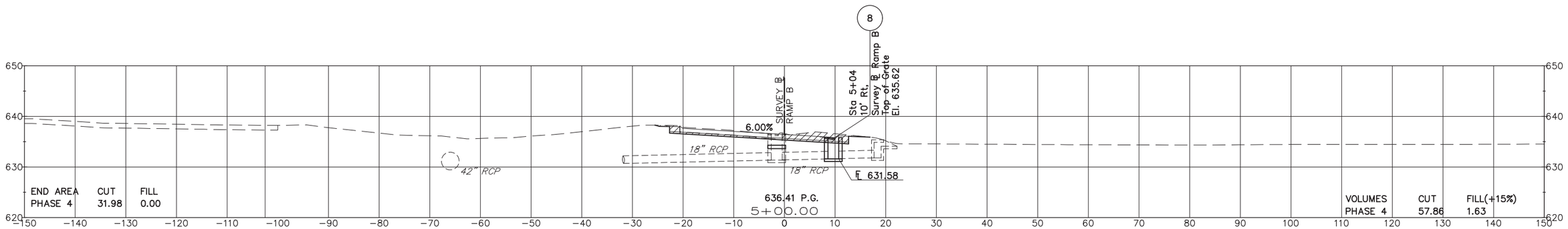

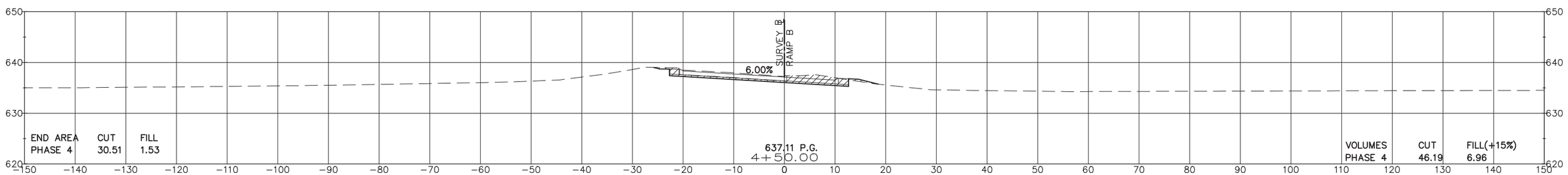

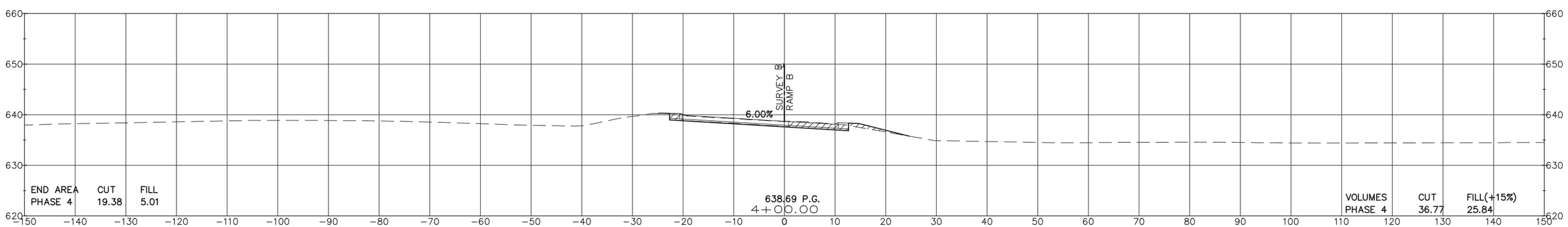

Survey	CKS	
Drawn	CKD	
Checked	CKE	
Approved		
Squad	C & K	

INTERCHANGE (OPERATIONAL IMPROVEMENTS) TULSA COUNTY

RAMP B

STA. 4+00.00 TO STA. 5+50.00

JOB PIECE NO. 10981(05) SHEET NO. X003

S:\Projects\ODOT\2015 EC-1710 I-44-169 Interchange\ACAD\PS&E\Plans\X001-X007-1098105-RAMP B.dwg, X003, 9/17/2021 3:13:27 PM

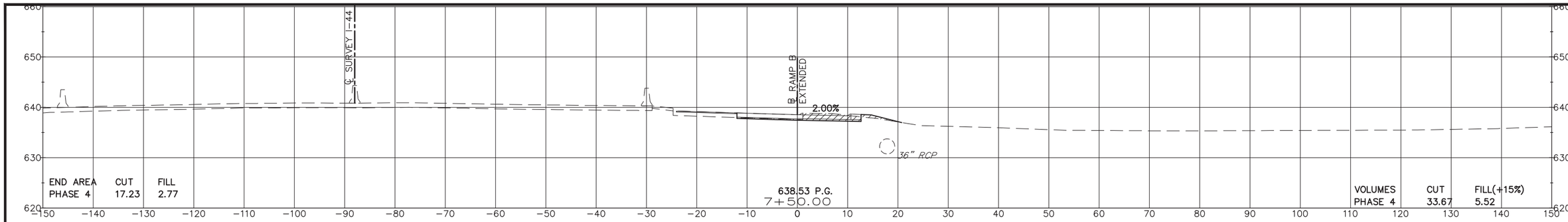

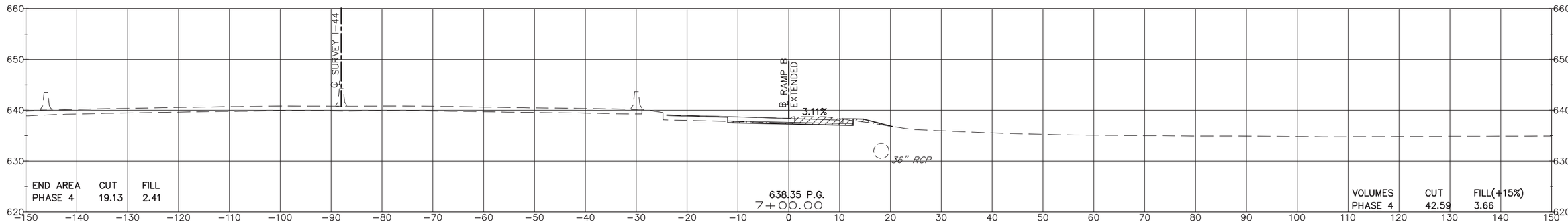

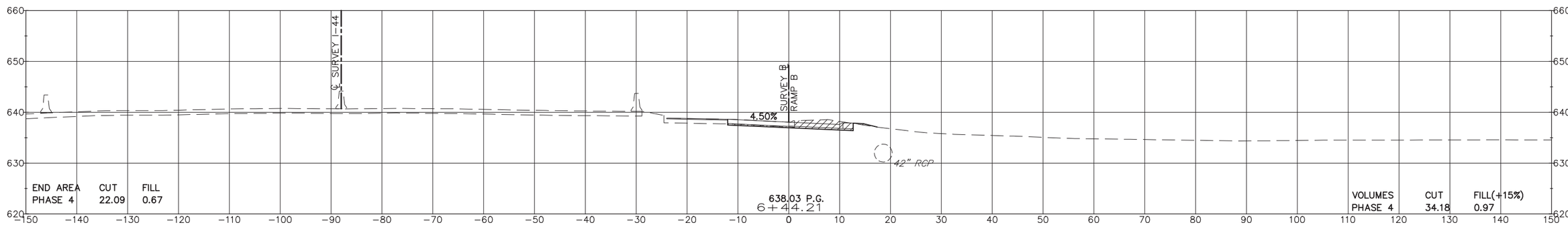

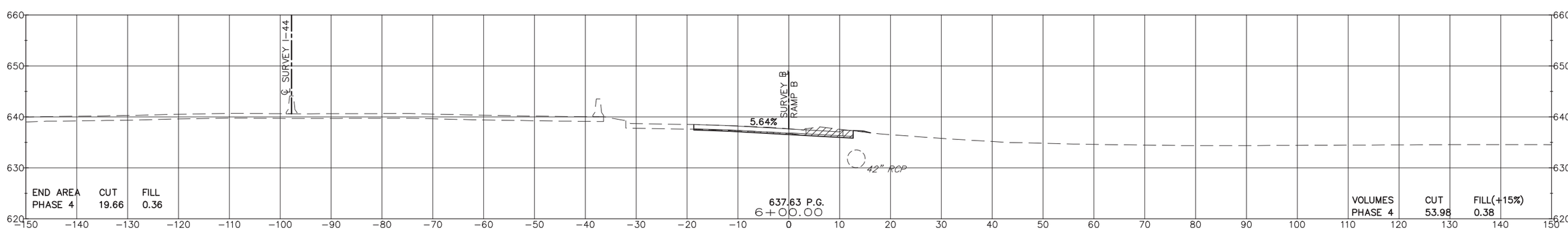

Survey	CKS	
Drawn	CKD	
Checked	CKE	
Approved		
Squad	C & K	

INTERCHANGE (OPERATIONAL IMPROVEMENTS) TULSA COUNTY

RAMP B

STA. 6+00.00 TO STA. 7+50.00

JOB PIECE NO. 10981(05) SHEET NO. X004

S:\Projects\ODOT\2015 EC-1710 I-44-169 Interchange\ACAD\PS&E\Plans\X001-X007-1098105-RAMP B.dwg, X004, 9/17/2021 3:13:32 PM

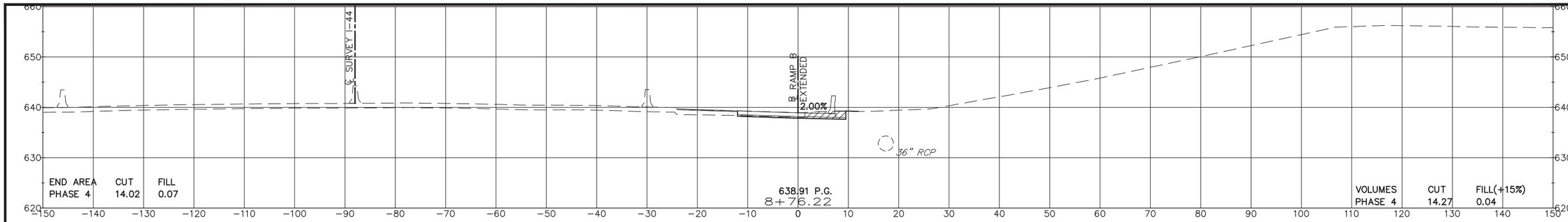

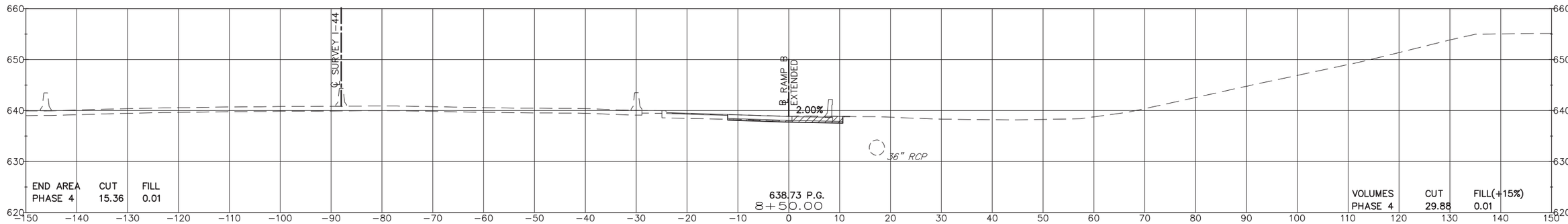

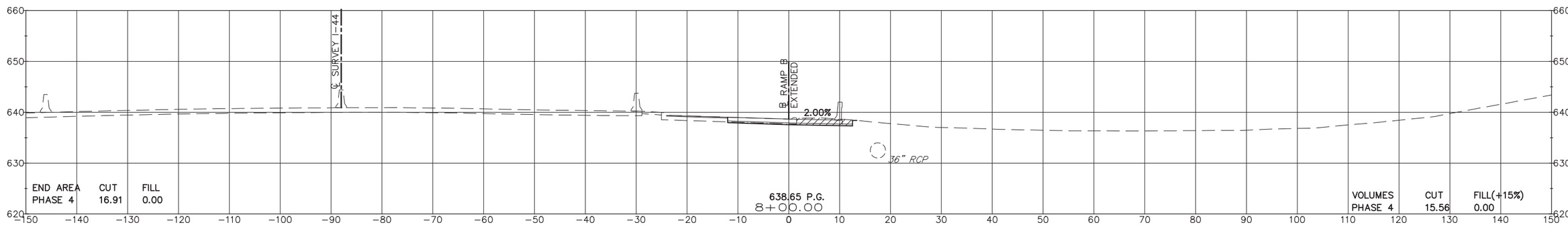

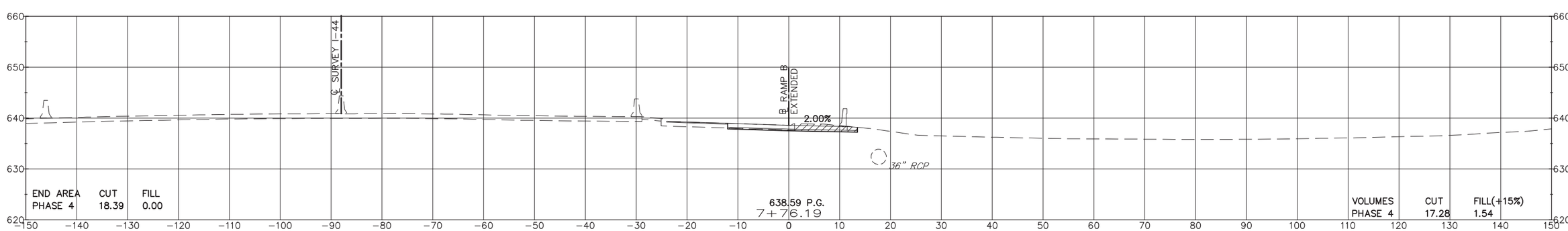

Survey	CKS	
Drawn	CKD	
Checked	CKE	
Approved		
Squad	C & K	

INTERCHANGE (OPERATIONAL IMPROVEMENTS) TULSA COUNTY

RAMP B

STA. 7+76.19 TO STA. 8+76.22

JOB PIECE NO. 10981(05) SHEET NO. X005

S:\Projects\ODOT\2015 EC-1710 I-44-169 Interchange\ACAD\PS&E\Plans\X001-X007-1098105-RAMP B.dwg, X005, 9/17/2021 3:13:37 PM

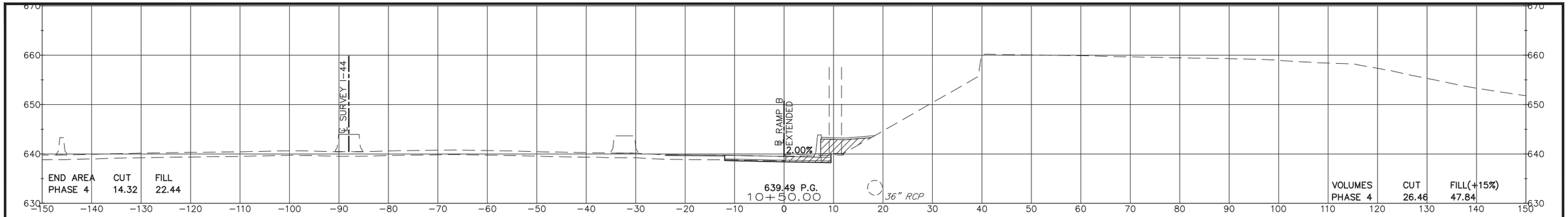

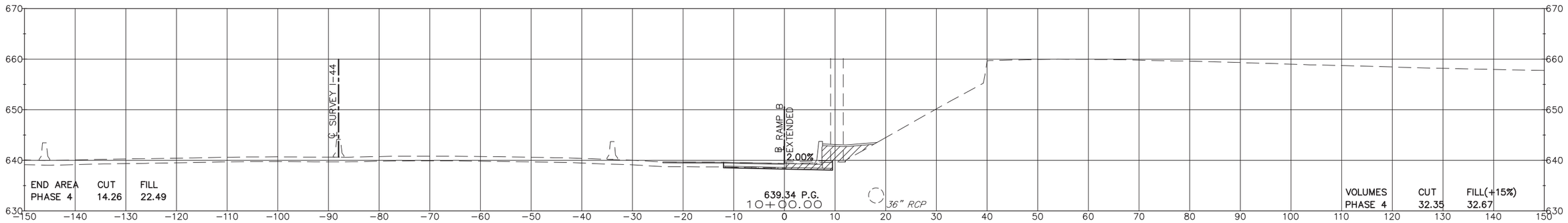

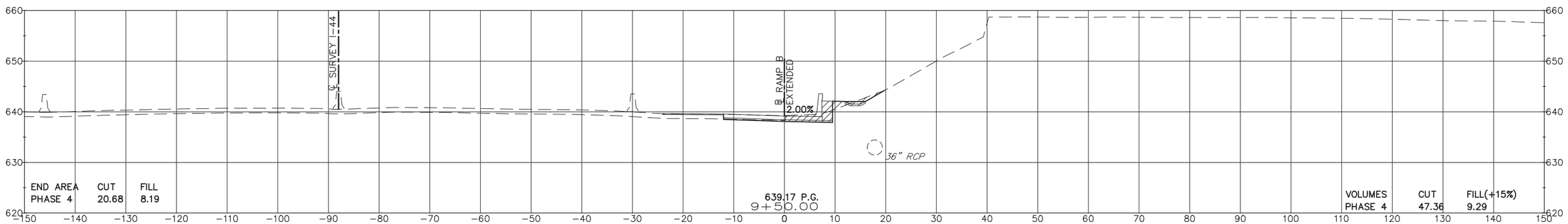

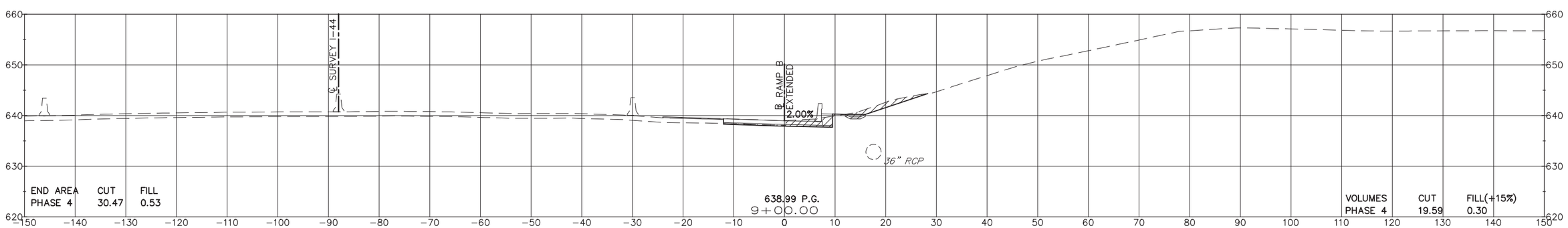

Survey	CKS	
Drawn	CKD	
Checked	CKE	
Approved		
Squad	C & K	

INTERCHANGE (OPERATIONAL IMPROVEMENTS) TULSA COUNTY

RAMP B

STA. 9+00.00 TO STA. 10+50.00

JOB PIECE NO. 10981(05) SHEET NO. X006

S:\Projects\ODOT\2015 EC-1710 I-44-169 Interchange\ACAD\PS&E\Plans\X001-X007-1098105-RAMP B.dwg, X006, 9/17/2021 3:13:42 PM

END CONSTRUCTION STA 11+56.19 ℄ RAMP 'B'
= BEGIN CONSTRUCTION STA. 19+63.33 ℄ RAMP 'D'

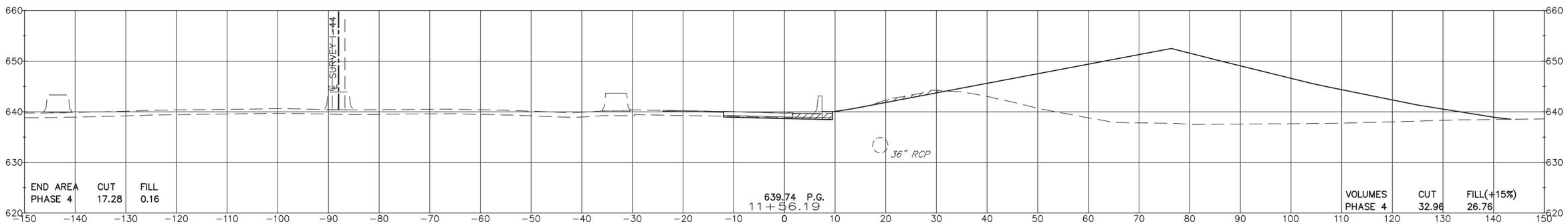

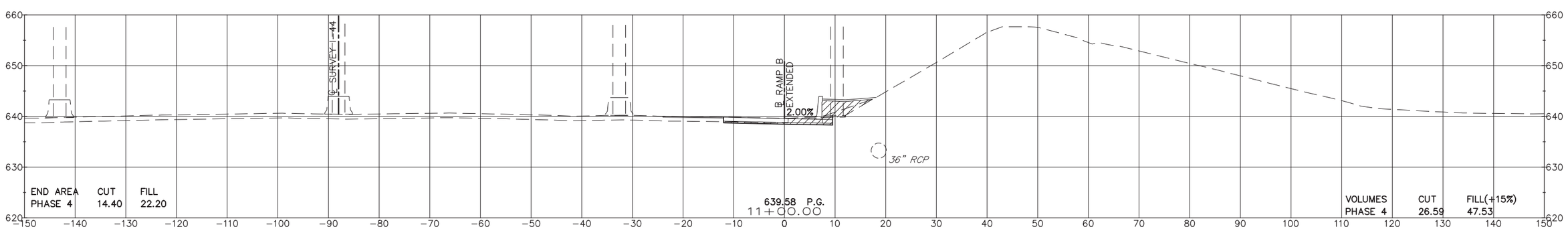

Survey	CKS	
Drawn	CKD	
Checked	CKE	
Approved		
Squad	C & K	

INTERCHANGE (OPERATIONAL IMPROVEMENTS) TULSA COUNTY

RAMP B

STA. 11+00.00TO STA. 11+56.19

JOB PIECE NO. 10981(05) SHEET NO. X007

S:\Projects\ODOT\2015 EC-1710 I-44-169 Interchange\ACAD\PS&E\Plans\X001-X007-1098105-RAMP B.dwg, X007, 9/17/2021 3:13:47 PM

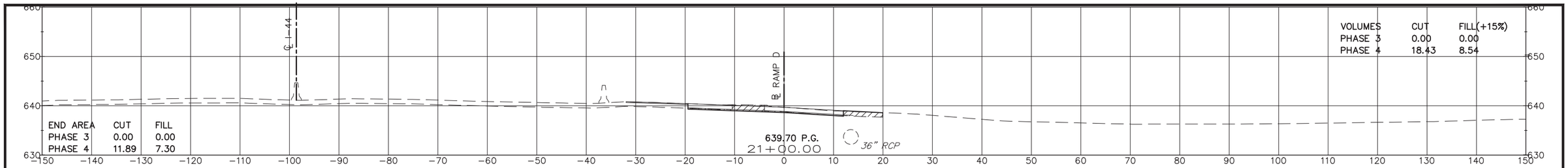

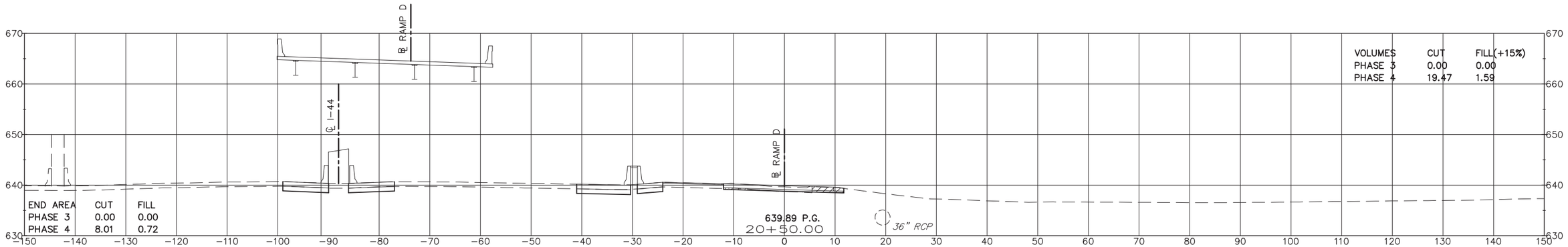

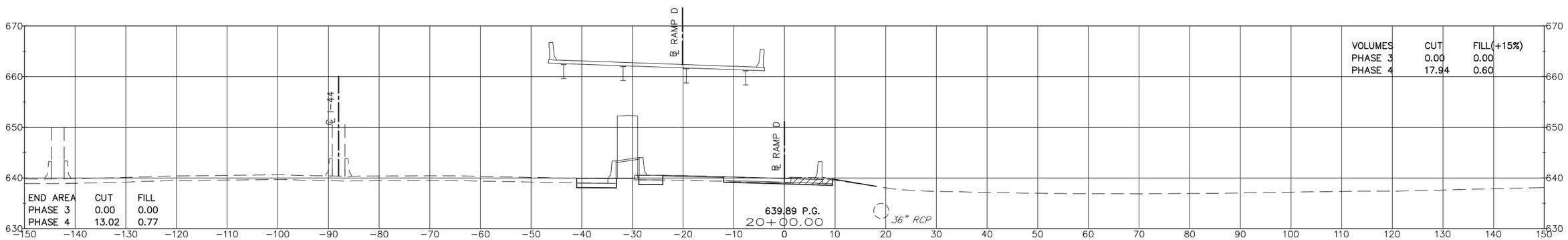

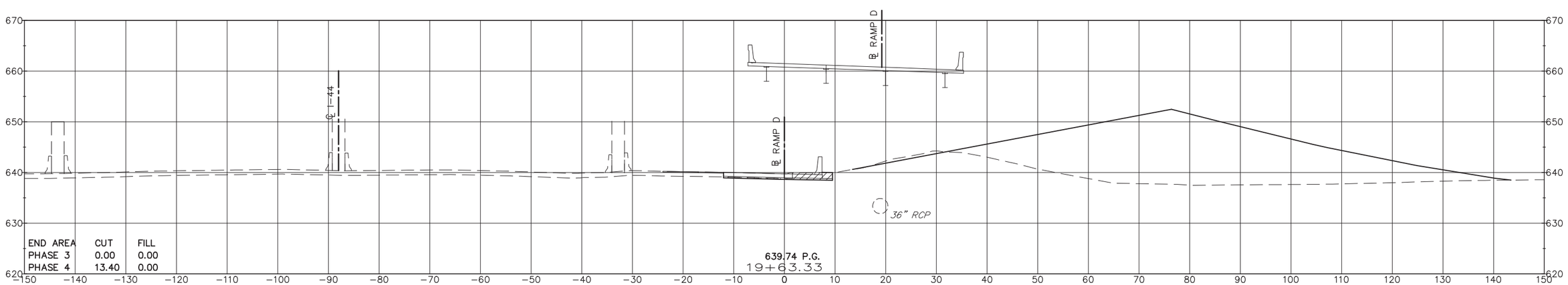

END INCIDENTAL CONSTRUCTION STA 19+63.33
BEGIN CONSTRUCTION STA 19+63.33

BEGIN INCIDENTAL CONSTRUCTION STA 11+60

PHASE 3 PHASE 4

Survey	CKS	
Drawn	CKD	
Checked	CKE	
Approved		
Squad	C & K	

INTERCHANGE (OPERATIONAL IMPROVEMENTS) TULSA COUNTY

RAMP D

STA. 19+63.33 TO STA. 21+00.00

JOB PIECE NO. 10981(05) SHEET NO. X008

S:\Projects\ODOT\2015 EC-1710 I-44-169 Interchange\ACAD\PS&E\Plans\X008-X022-1098105-RAMP D.dwg, X008, 9/17/2021 3:13:57 PM

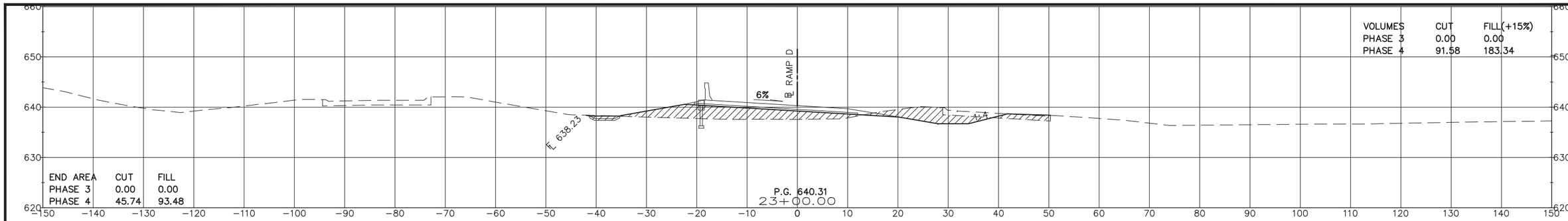

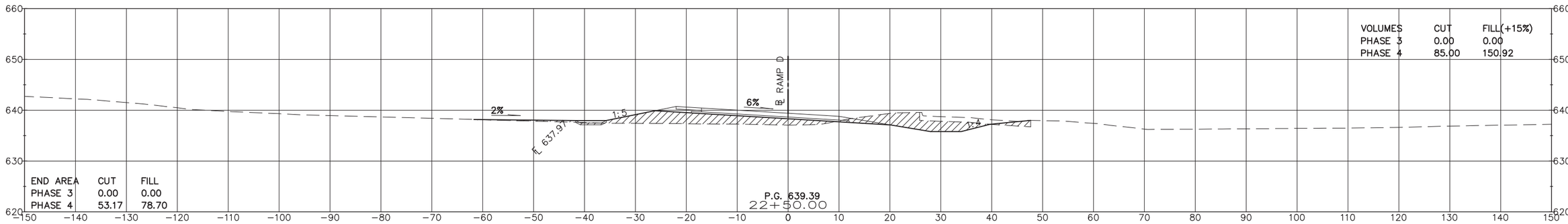

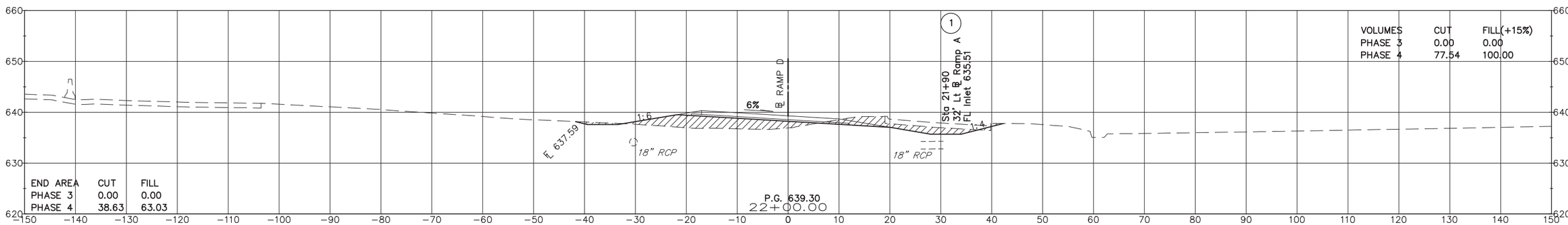

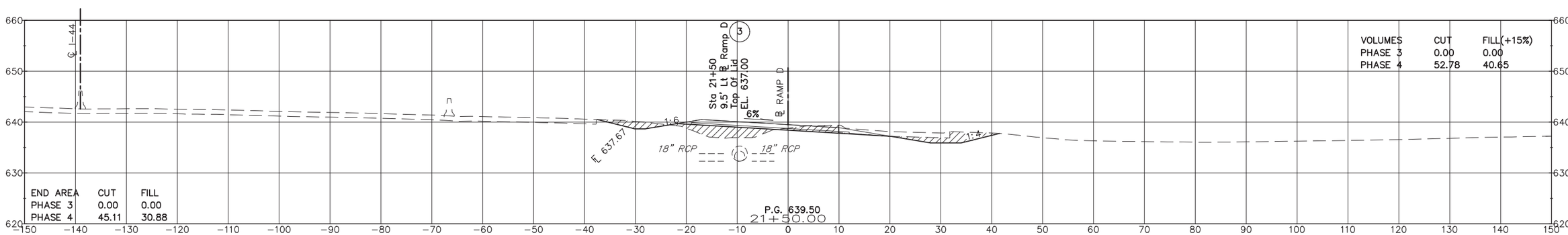

PHASE 3 PHASE 4

Survey	CKS	
Drawn	CKD	
Checked	CKE	
Approved		
Squad	C & K	

INTERCHANGE (OPERATIONAL IMPROVEMENTS) TULSA COUNTY

RAMP D

STA. 21+50.00 TO STA. 23+00.00

JOB PIECE NO. 10981(05) SHEET NO. X009

S:\Projects\ODOT\2015 EC-1710 I-44-169 Interchange\ACAD\PS&E\Plans\X008-X022-1098105-RAMP D.dwg, X009, 9/17/2021 3:13:53 PM

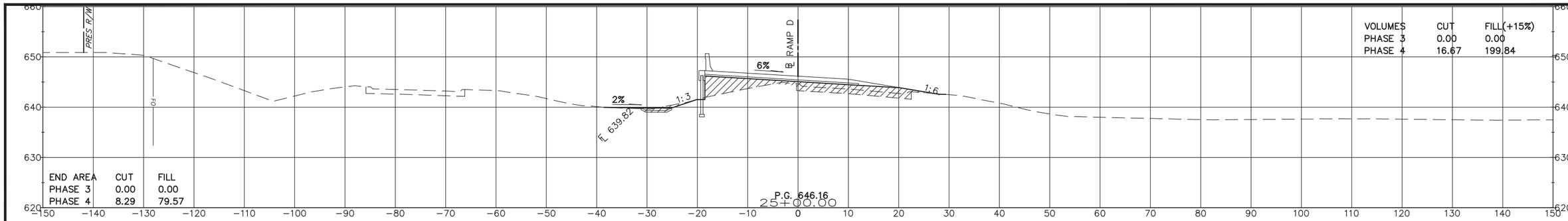

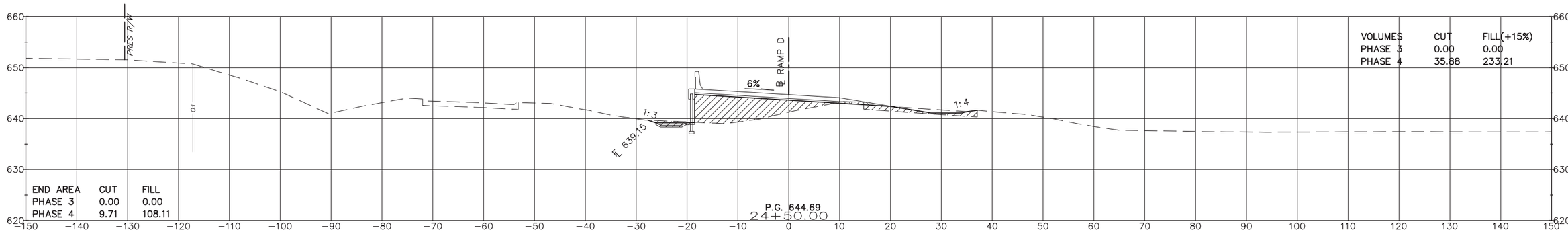

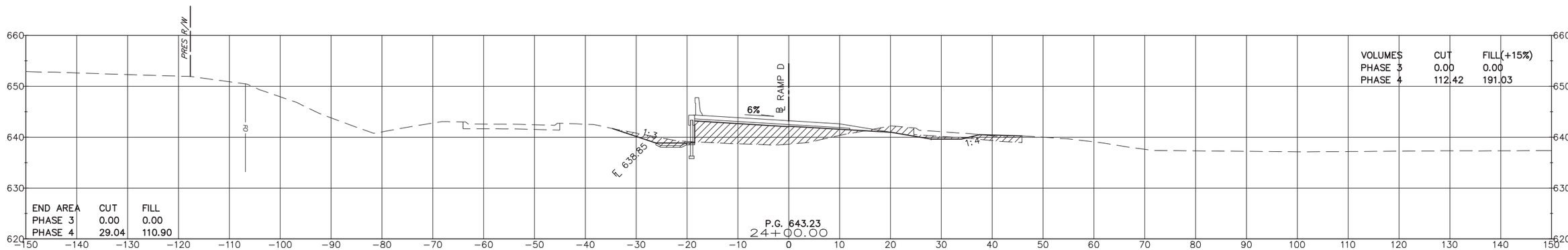

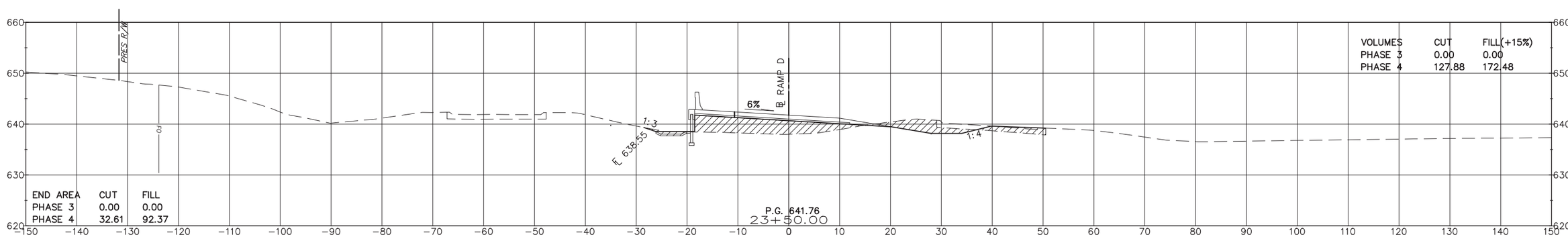

PHASE 3 PHASE 4

Survey	CKS	
Drawn	CKD	
Checked	CKE	
Approved		
Squad	C & K	

INTERCHANGE (OPERATIONAL IMPROVEMENTS) TULSA COUNTY

RAMP D

STA. 23+50.00 TO STA. 25+00.00

JOB PIECE NO. 10981(05) SHEET NO. X010

S:\Projects\ODOT\2015 EC-1710 I-44-169 Interchange\ACAD\PS&E\Plans\X008-X022-1098105-RAMP D.dwg, X010, 9/17/2021 3:14:02 PM

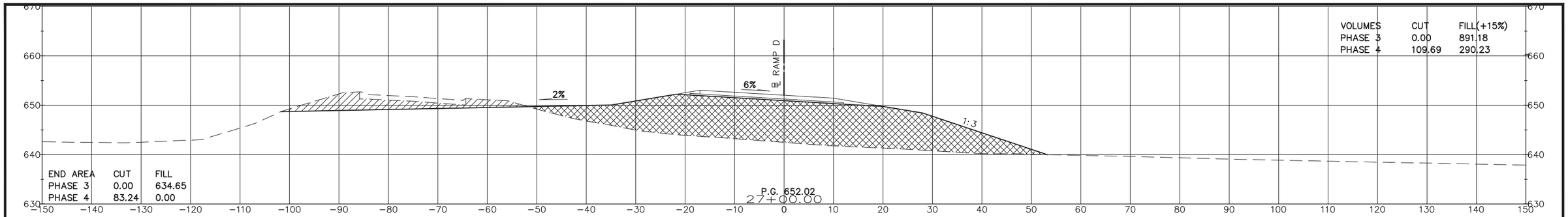

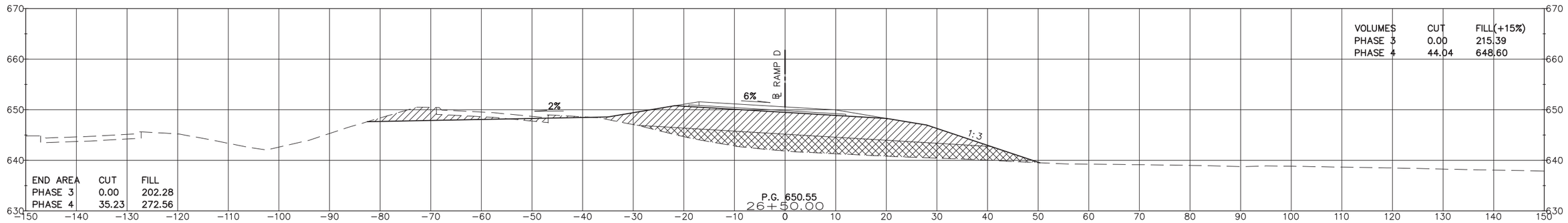

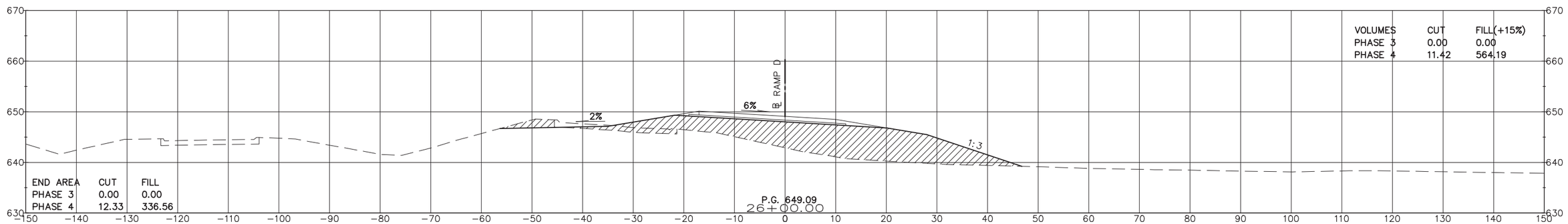

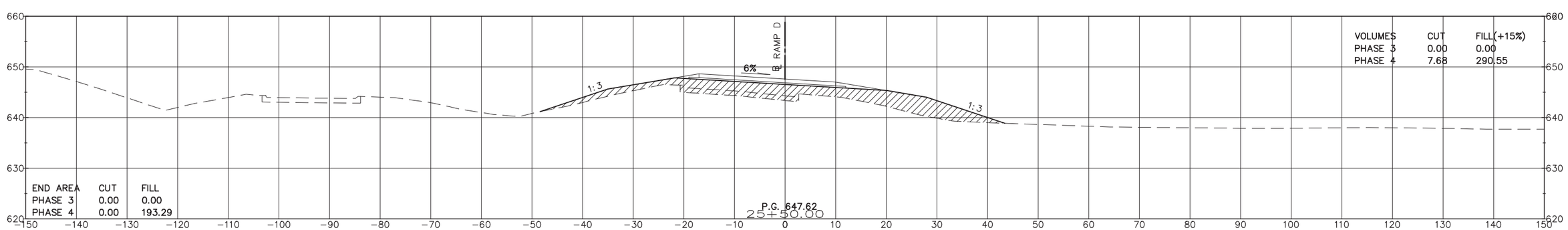

PHASE 3 PHASE 4

Survey	CKS	
Drawn	CKD	
Checked	CKE	
Approved		
Squad	C & K	

INTERCHANGE (OPERATIONAL IMPROVEMENTS) TULSA COUNTY

RAMP D

STA. 25+50.00 TO STA. 27+00.00

JOB PIECE NO. 10981(05) SHEET NO. X011

S:\Projects\ODOT\2015 EC-1710 I-44-169 Interchange\ACAD\PS&E\Plans\X008-X022-1098105-RAMP D.dwg, X011, 9/17/2021 3:14:07 PM

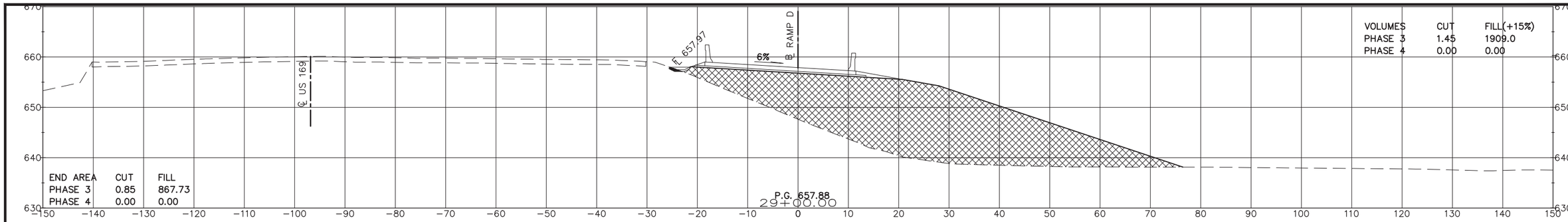

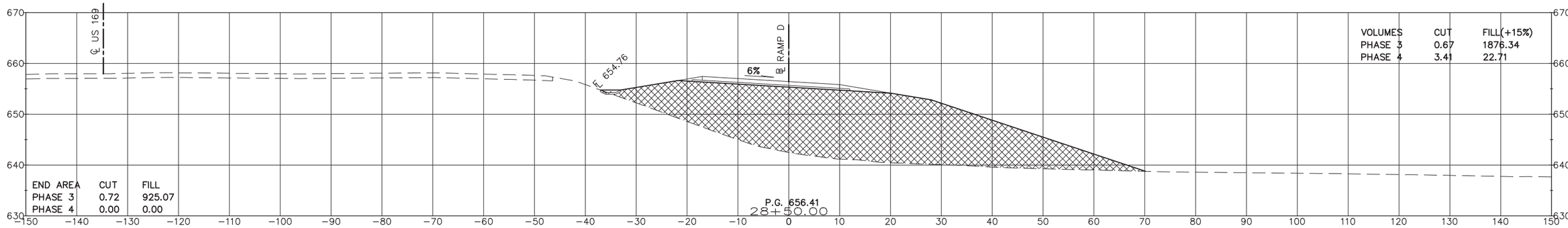

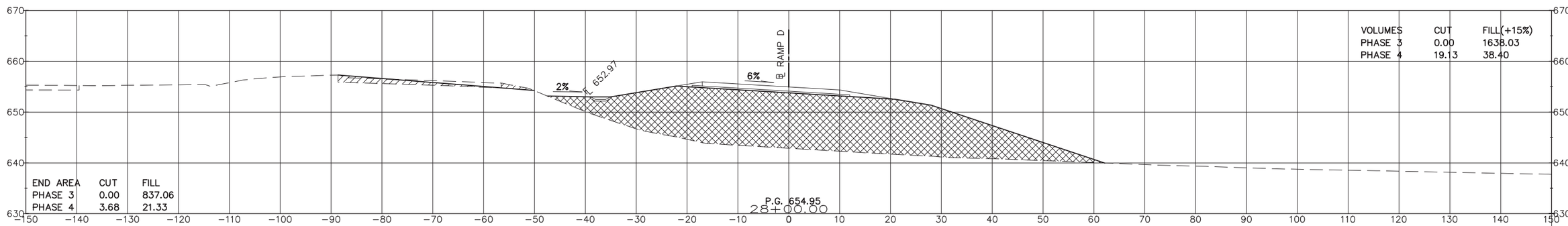

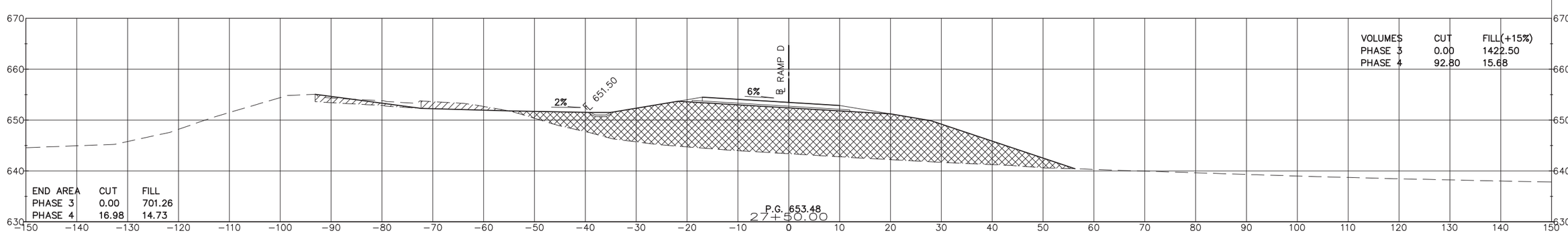

PHASE 3 PHASE 4

Survey	CKS	
Drawn	CKD	
Checked	CKE	
Approved		
Squad	C & K	

INTERCHANGE (OPERATIONAL IMPROVEMENTS) TULSA COUNTY

RAMP D

STA. 27+50.00 TO STA. 29+00.00

JOB PIECE NO. 10981(05) SHEET NO. X012

S:\Projects\ODOT\2015 EC-1710 I-44-169 Interchange\ACAD\PS&E\Plans\X008-X022-1098105-RAMP D.dwg, X012, 9/17/2021 3:14:12 PM

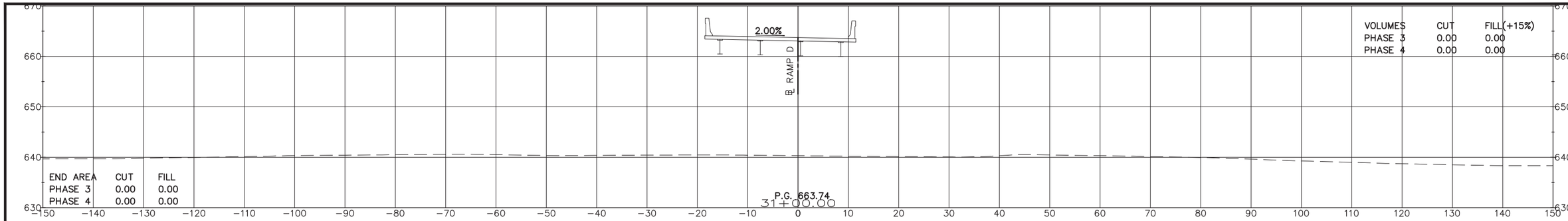

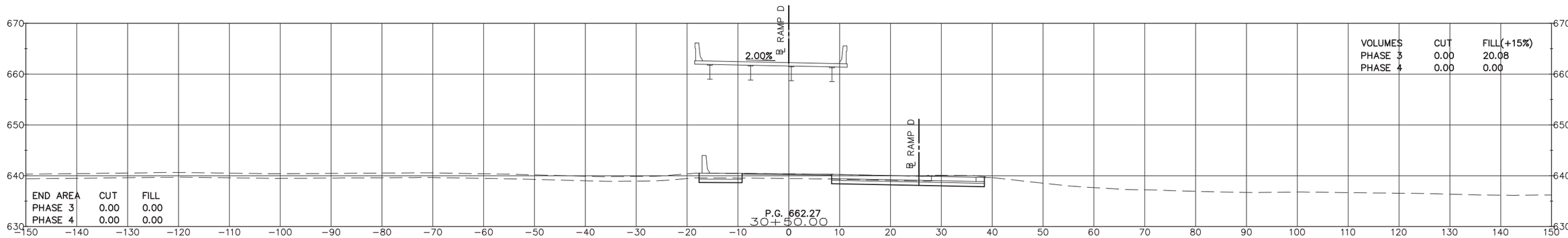

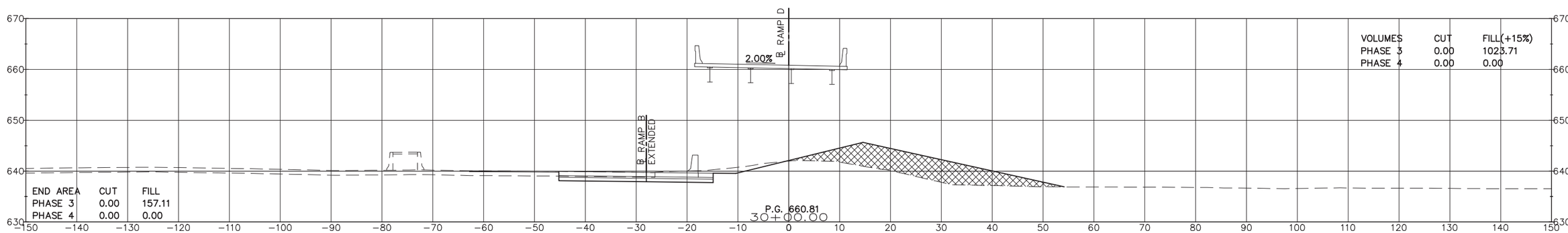

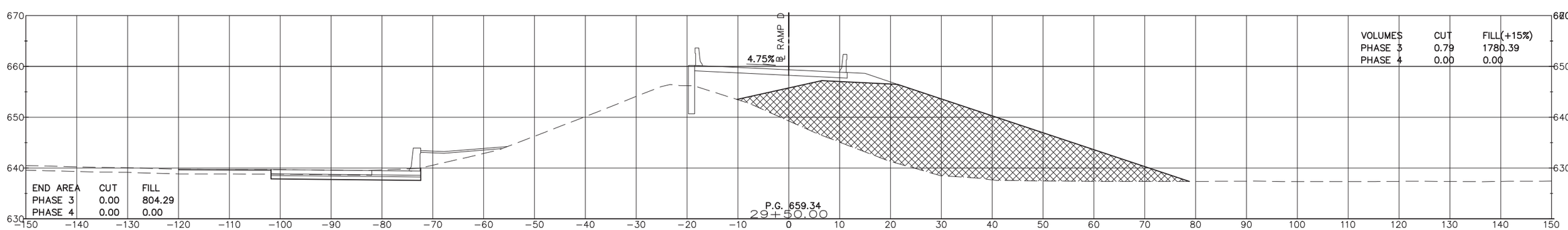

PHASE 3 PHASE 4

Survey	CKS	
Drawn	CKD	
Checked	CKE	
Approved		
Squad	C & K	

INTERCHANGE (OPERATIONAL IMPROVEMENTS) TULSA COUNTY

RAMP D

STA. 29+50.00 TO STA. 31+00.00

JOB PIECE NO. 10981(05) SHEET NO. X013

S:\Projects\ODOT\2015 EC-1710 I-44-169 Interchange\ACAD\PS&E\Plans\X008-X022-10981(05)-RAMP D.dwg, X013, 9/17/2021 3:14:17 PM

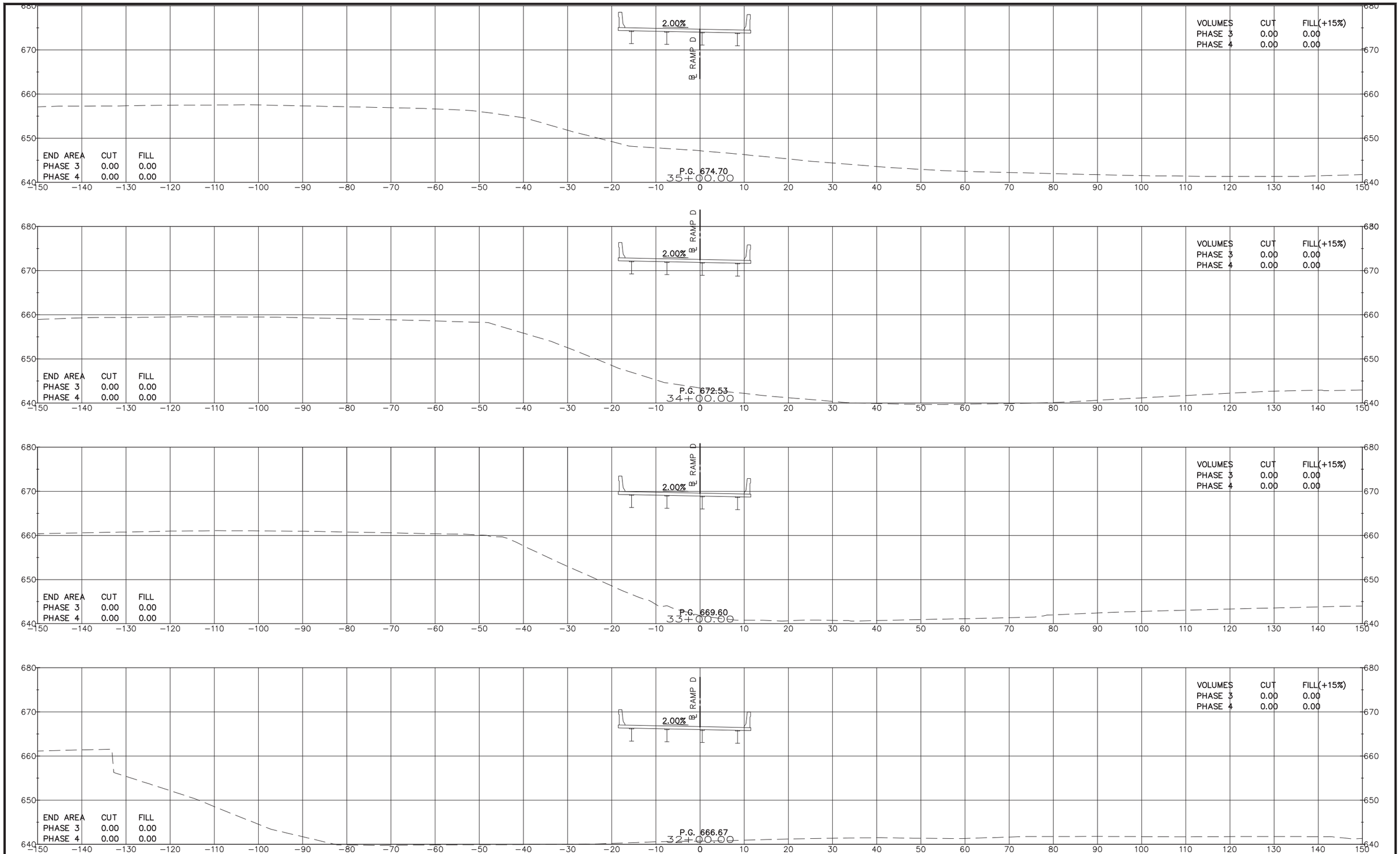

PHASE 3 PHASE 4

Survey	CKS	
Drawn	CKD	
Checked	CKE	
Approved		
Squad	C & K	

INTERCHANGE (OPERATIONAL IMPROVEMENTS) TULSA COUNTY

RAMP D

STA. 32+00.00 TO STA. 35+00.00

JOB PIECE NO. 10981(05) SHEET NO. X014

S:\Projects\ODOT\2015 EC-1710 I-44-169 Interchange\ACAD\PS&E\Plans\X008-X022-1098105-RAMP D.dwg, X014, 9/17/2021 3:14:22 PM

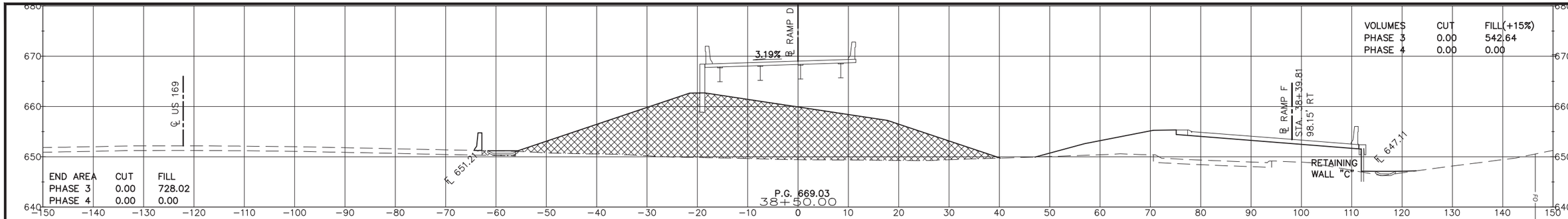

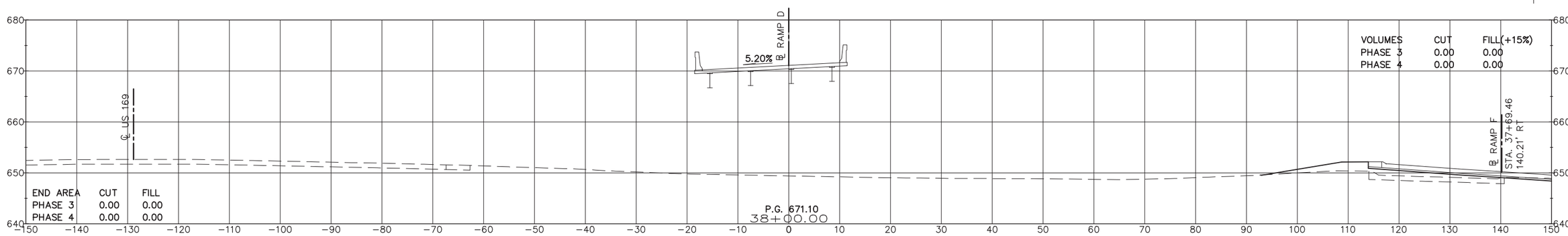

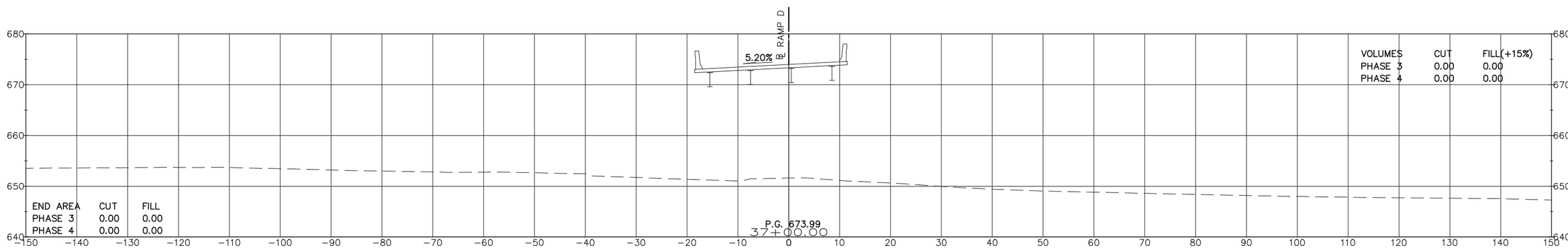

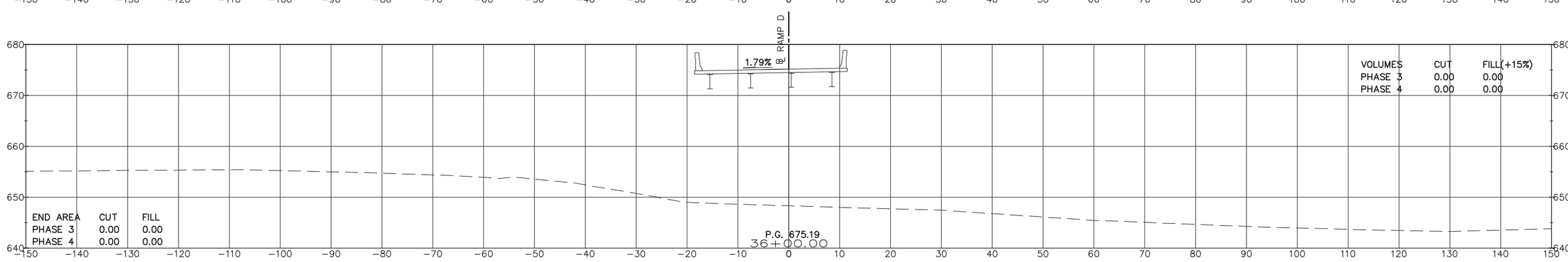

PHASE 3 PHASE 4

Survey	CKS	
Drawn	CKD	
Checked	CKE	
Approved		
Squad	C & K	

INTERCHANGE (OPERATIONAL IMPROVEMENTS) TULSA COUNTY

RAMP D

STA. 36+00.00 TO STA. 38+50.00

JOB PIECE NO. 10981(05) SHEET NO. X015

S:\Projects\ODOT\2015 EC-1710 I-44-169 Interchange\ACAD\PS&E\Plans\X008-X022-10981(05)-RAMP D.dwg, X015, 9/17/2021 3:14:27 PM

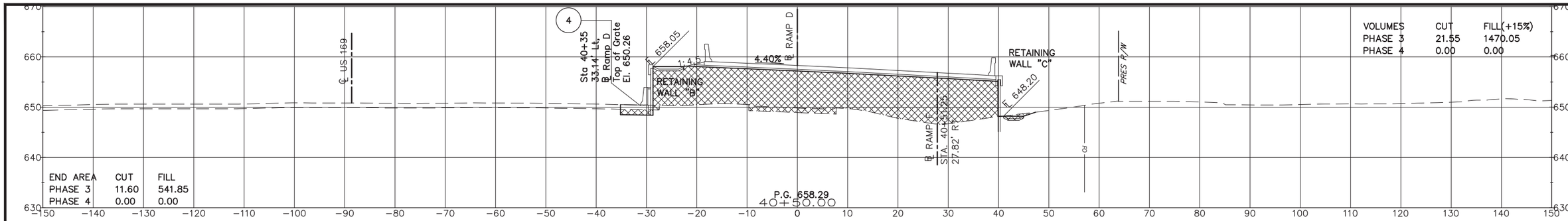

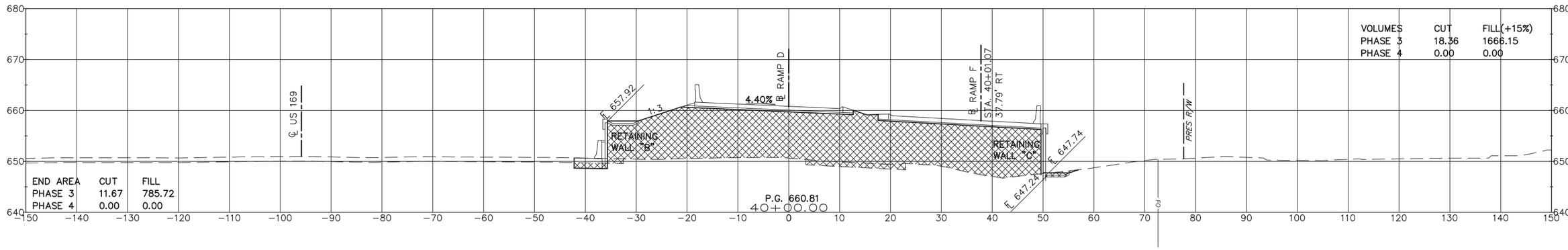

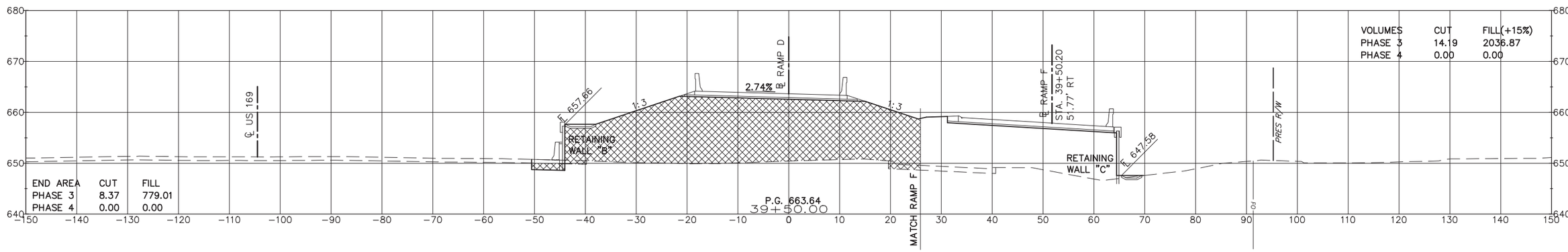

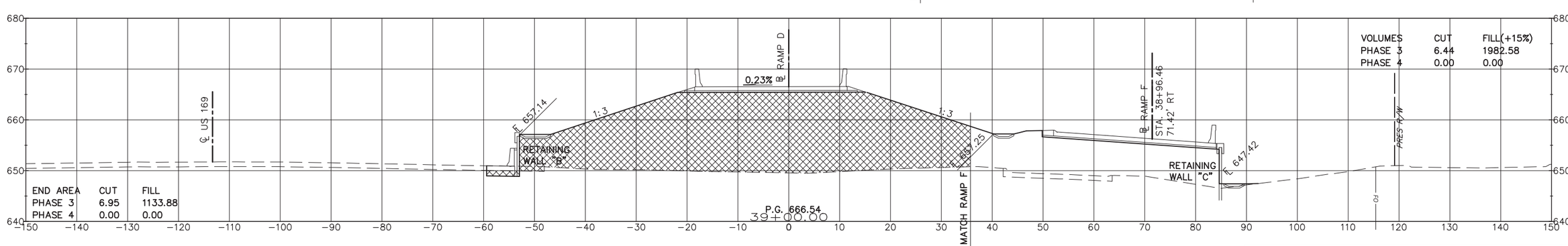

PHASE 3 PHASE 4

Survey	CKS	
Drawn	CKD	
Checked	CKE	
Approved		
Squad	C & K	

INTERCHANGE (OPERATIONAL IMPROVEMENTS) TULSA COUNTY

RAMP D

STA. 39+00.00 TO STA. 40+50.00

JOB PIECE NO. 10981(05) SHEET NO. X016

S:\Projects\ODOT\2015 EC-1710 I-44-169 Interchange\ACAD\PS&E\Plans\X008-X022-1098105-RAMP D.dwg, X016, 9/17/2021 3:14:32 PM

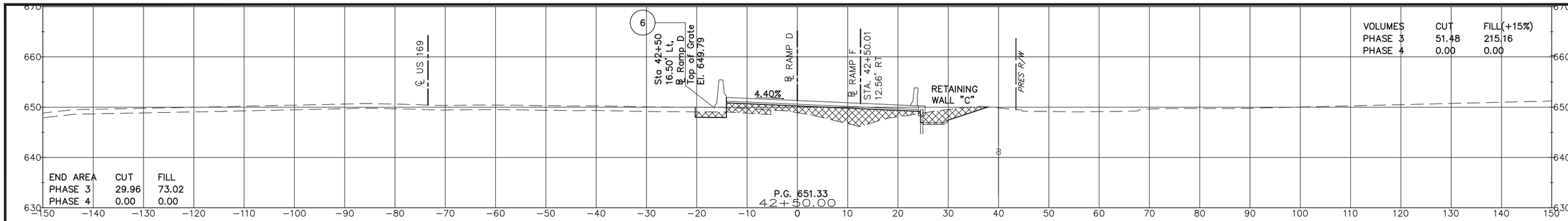

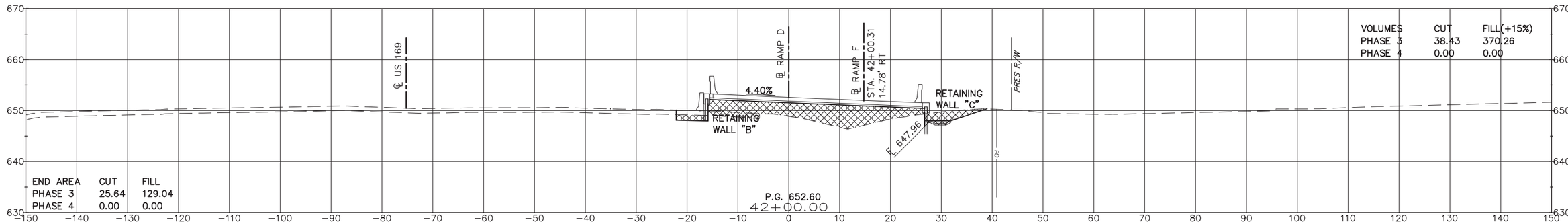

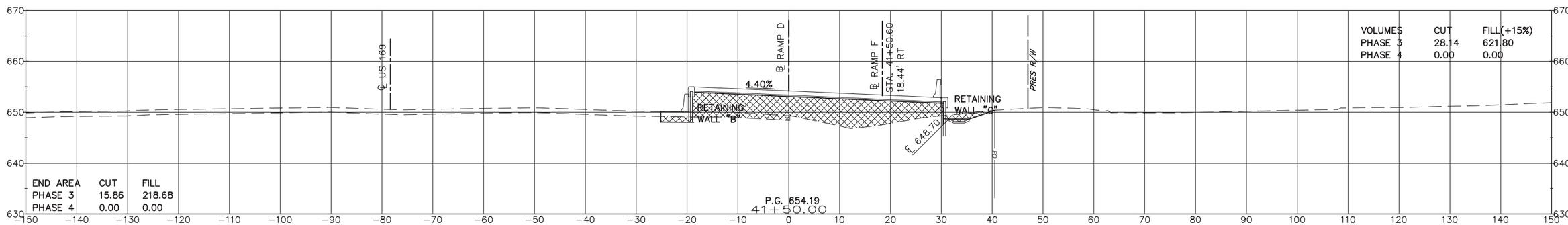

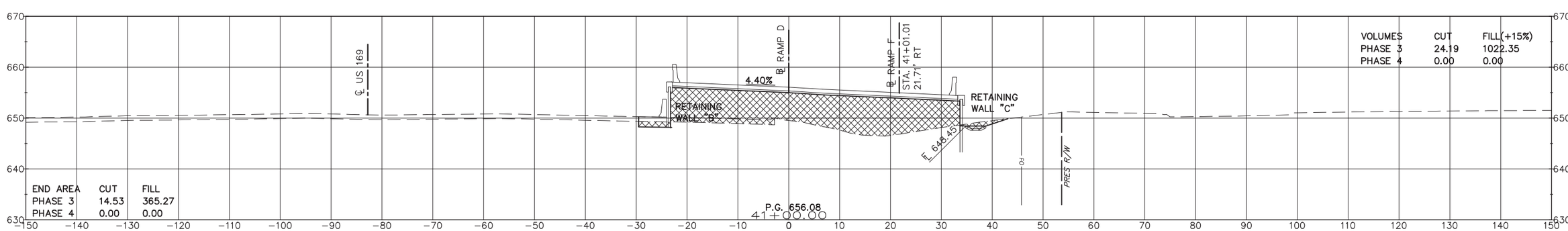

PHASE 3 PHASE 4

Survey	CKS	
Drawn	CKD	
Checked	CKE	
Approved		
Squad	C & K	

INTERCHANGE (OPERATIONAL IMPROVEMENTS) TULSA COUNTY

RAMP D

STA. 41+00.00 TO STA. 42+50.00

JOB PIECE NO. 10981(05) SHEET NO. X017

S:\Projects\ODOT\2015 EC-1710 I-44-169 Interchange\ACAD\PS&E\Plans\X008-X022-1098105-RAMP D.dwg, X017, 9/17/2021 3:14:37 PM

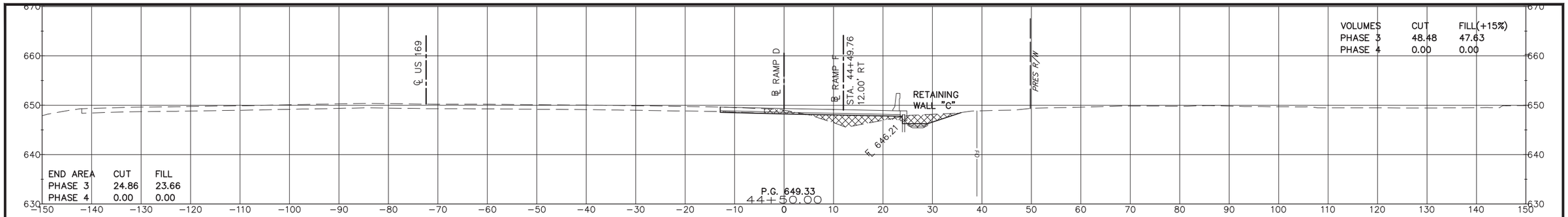

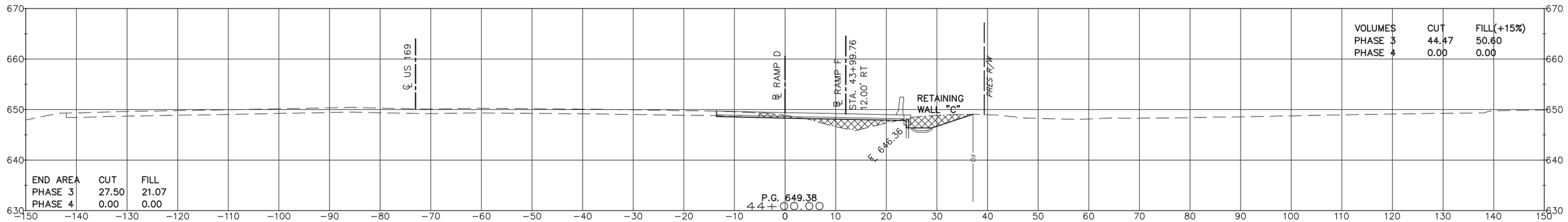

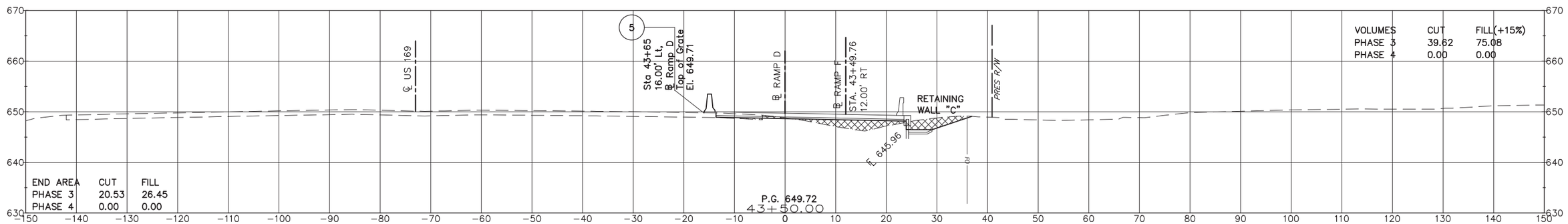

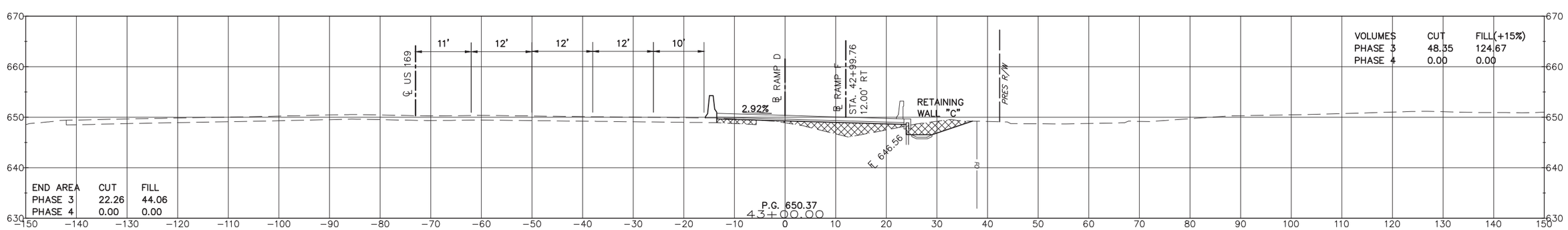

PHASE 3 PHASE 4

Survey	CKS	
Drawn	CKD	
Checked	CKE	
Approved		
Squad	C & K	

INTERCHANGE (OPERATIONAL IMPROVEMENTS) TULSA COUNTY

RAMP D

STA. 43+00.00 TO STA. 44+50.00

JOB PIECE NO. 10981(05) SHEET NO. X018

S:\Projects\ODOT\2015 EC-1710 I-44-169 Interchange\ACAD\PS&E\Plans\X008-X022-1098105-RAMP D.dwg, X018, 9/17/2021 3:14:42 PM

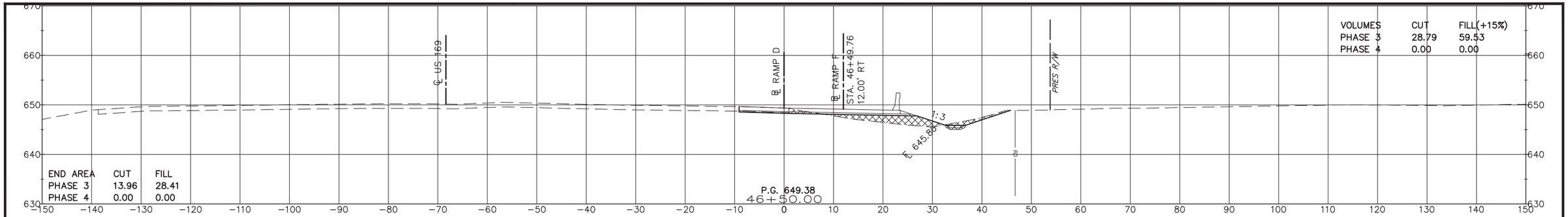

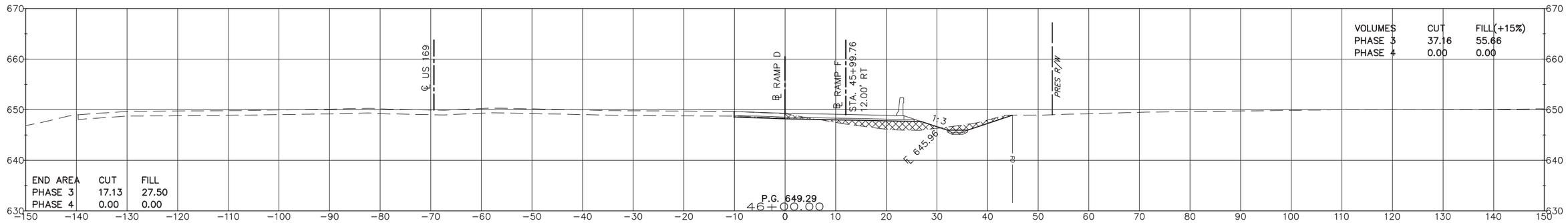

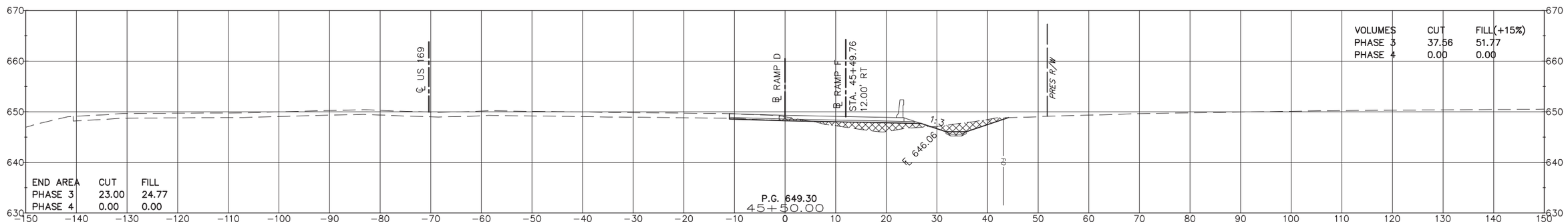

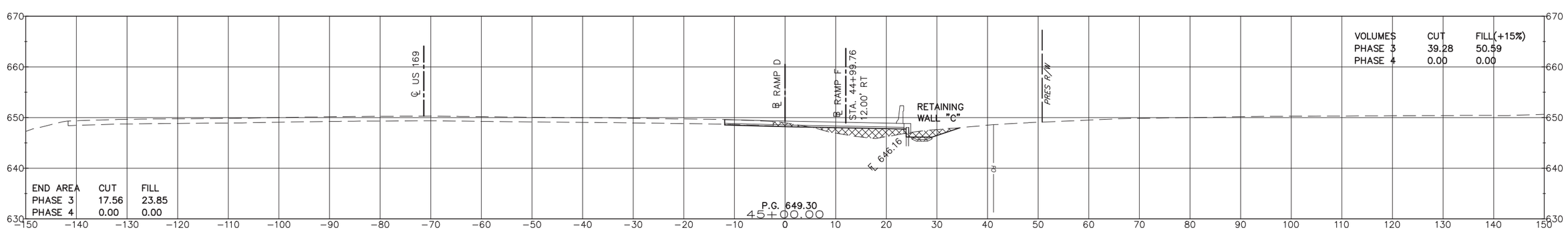

PHASE 3 PHASE 4

Survey	CKS	
Drawn	CKD	
Checked	CKE	
Approved		
Squad	C & K	

INTERCHANGE (OPERATIONAL IMPROVEMENTS) TULSA COUNTY

RAMP D

STA. 45+00.00 TO STA. 46+50.00

JOB PIECE NO. 10981(05) SHEET NO. X019

S:\Projects\ODOT\2015 EC-1710 I-44-169 Interchange\ACAD\PS&E\Plans\X008-X022-1098105-RAMP D.dwg, X019, 9/17/2021 3:14:47 PM

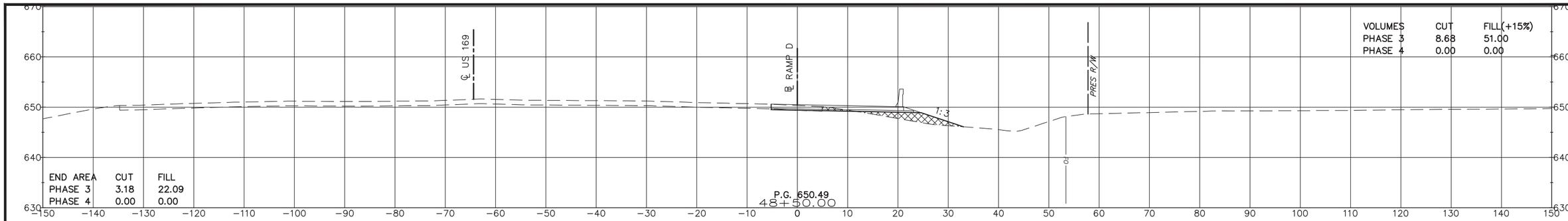

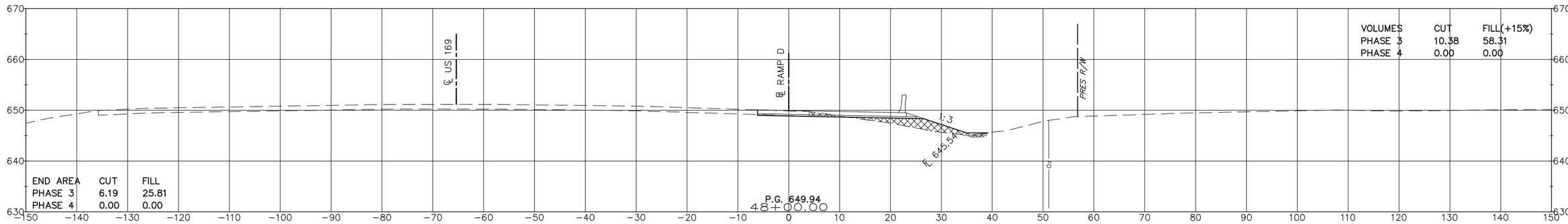

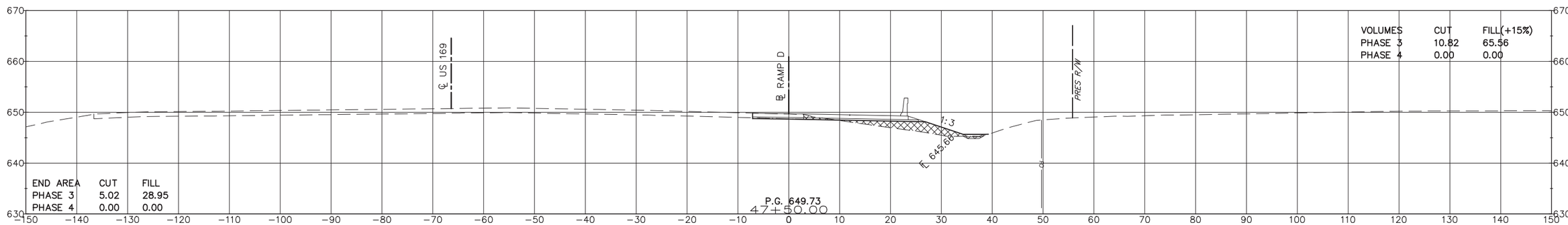

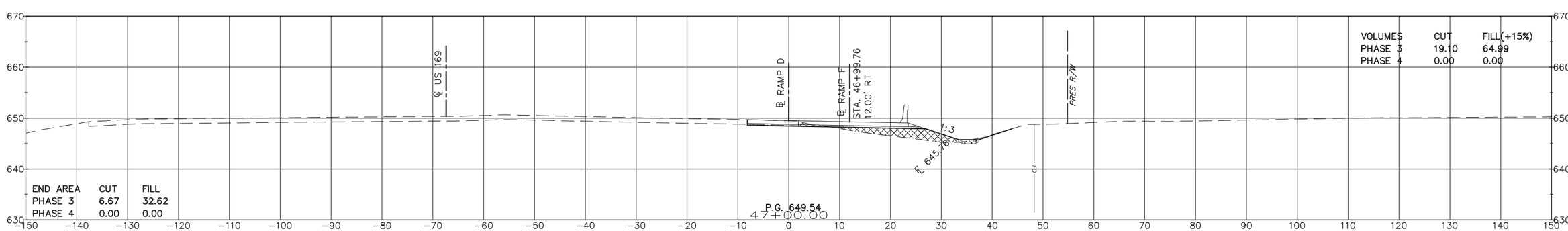

PHASE 3 PHASE 4

Survey	CKS	
Drawn	CKD	
Checked	CKE	
Approved		
Squad	C & K	

INTERCHANGE (OPERATIONAL IMPROVEMENTS) TULSA COUNTY

RAMP D

STA. 47+00.00 TO STA. 48+50.00

JOB PIECE NO. 10981(05) SHEET NO. X020

S:\Projects\ODOT\2015 EC-1710 I-44-169 Interchange\ACAD\PS&E\Plans\X008-X022-1098105-RAMP D.dwg, X020, 9/17/2021 3:14:52 PM

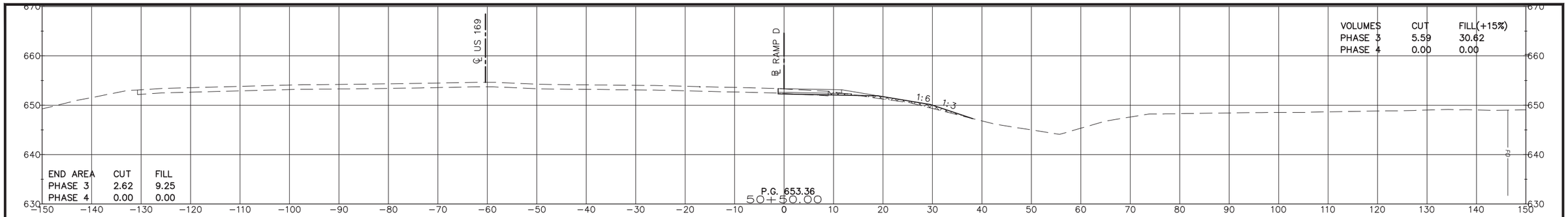

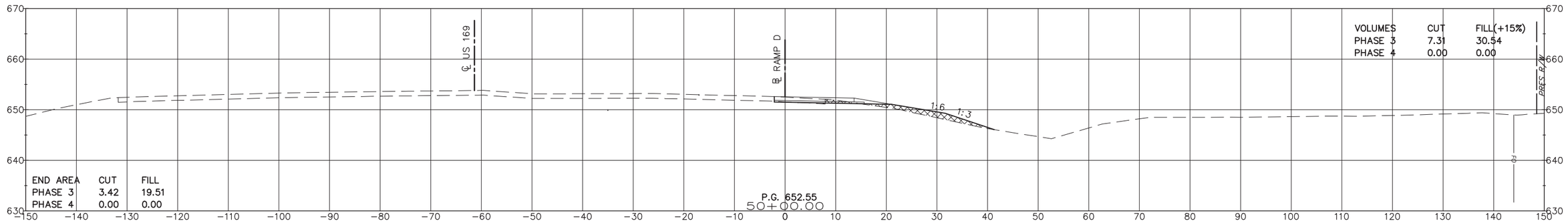

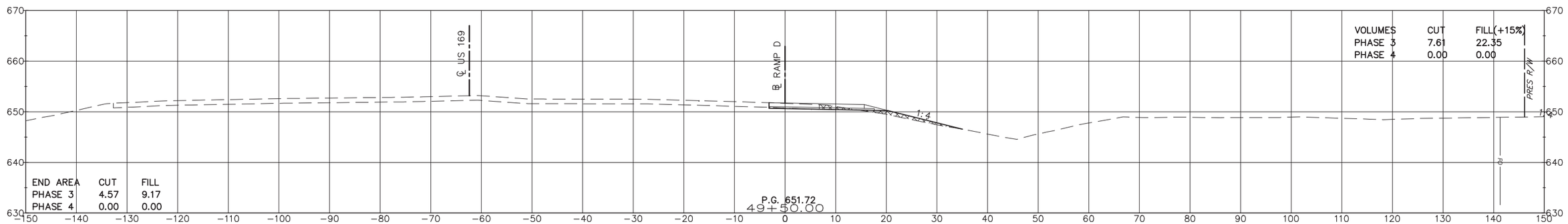

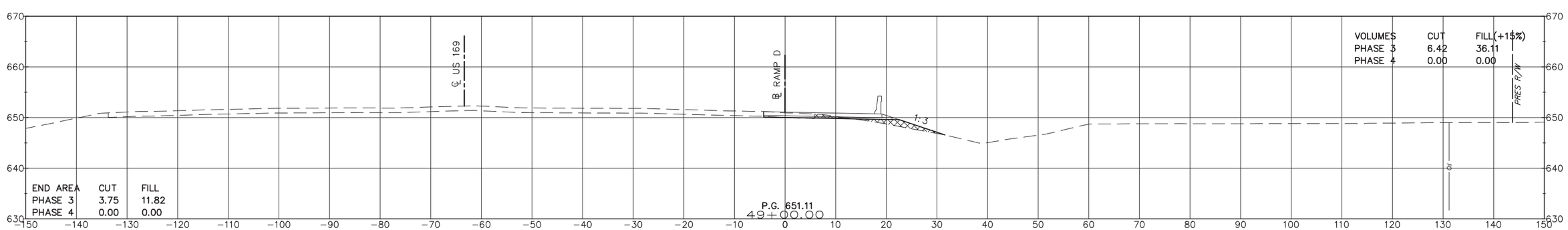

PHASE 3 PHASE 4

Survey	CKS	
Drawn	CKD	
Checked	CKE	
Approved		
Squad	C & K	

INTERCHANGE (OPERATIONAL IMPROVEMENTS) TULSA COUNTY

RAMP D

STA. 49+00.00 TO STA. 50+50.00

JOB PIECE NO. 10981(05) SHEET NO. X021

S:\Projects\ODOT\2015 EC-1710 I-44-169 Interchange\ACAD\PS&E\Plans\X008-X022-1098105-RAMP D.dwg, X021, 9/17/2021 3:14:57 PM

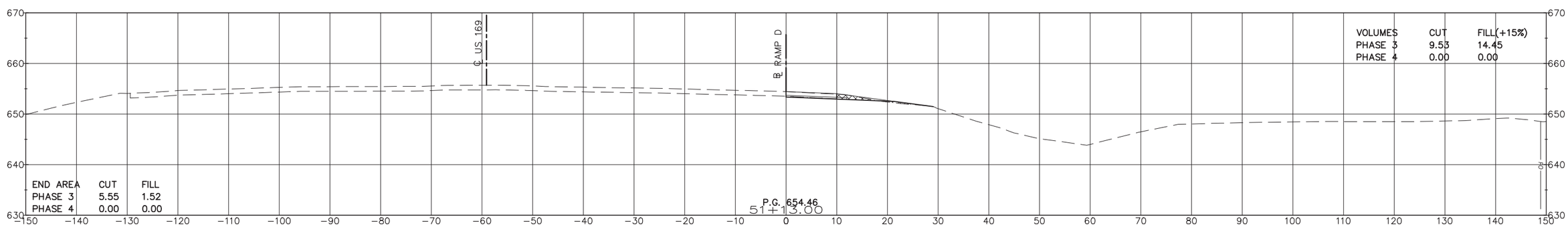

END CONSTRUCTION STA 51+13.00
BEGIN INCIDENTAL CONSTRUCTION STA 51+13.00

END INCIDENTAL CONSTRUCTION STA 56+00.00

PHASE 3 PHASE 4

Survey	CKS	
Drawn	CKD	
Checked	CKE	
Approved		
Squad	C & K	

INTERCHANGE (OPERATIONAL IMPROVEMENTS) TULSA COUNTY

RAMP D
STA. 51+18.14

JOB PIECE NO. 10981(05) SHEET NO. X022

S:\Projects\ODOT\2015 EC-1710 I-44-169 Interchange\ACAD\PS&E\Plans\X008-X022-1098105-RAMP D.dwg, X022, 9/17/2021 3:15:02 PM

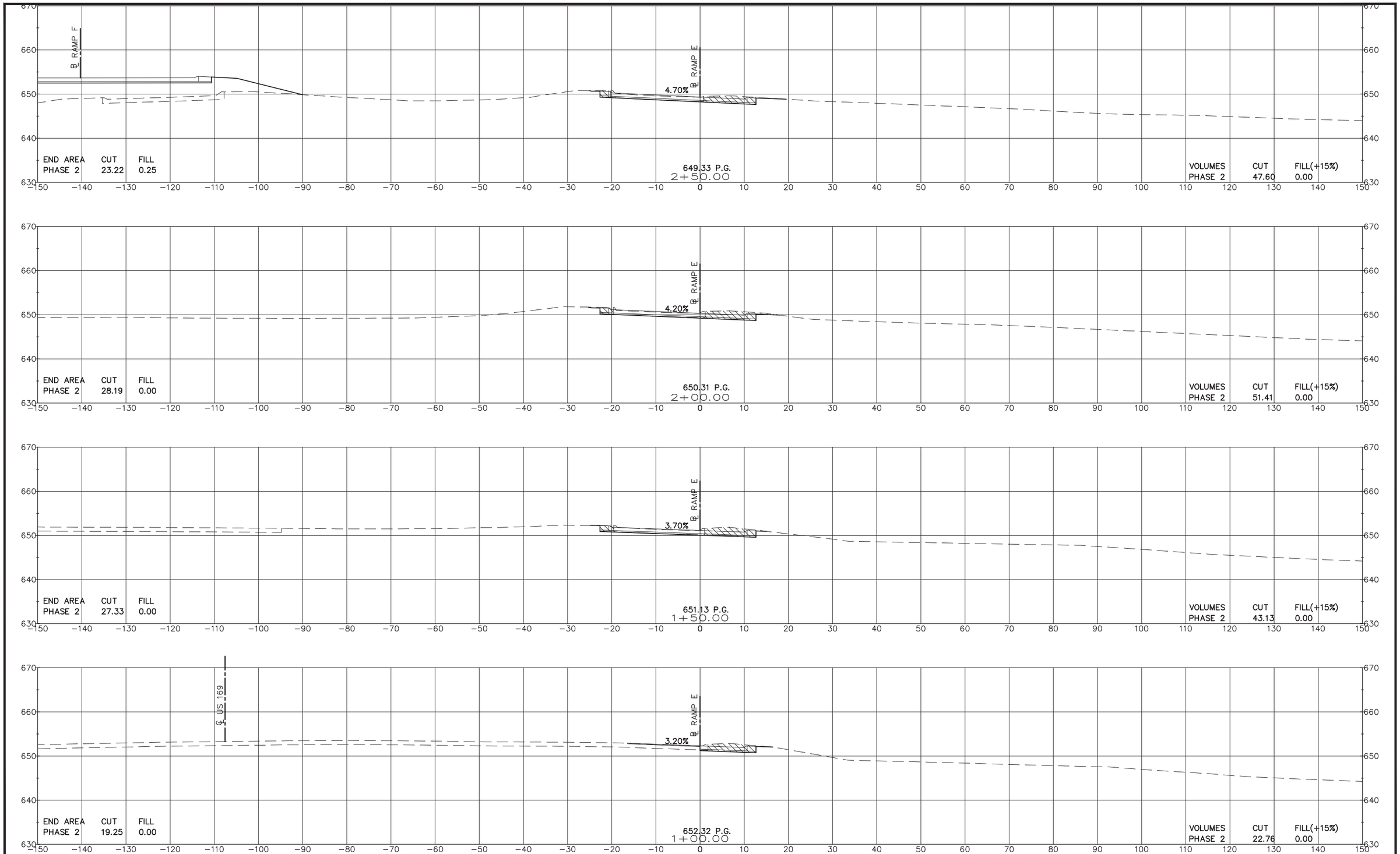

BEGIN CONSTRUCTION STA 0+60.70 ℄ RAMP 'E'

PHASE 2

Survey	CKS	
Drawn	CKD	
Checked	CKE	
Approved		
Squad	C & K	

INTERCHANGE (OPERATIONAL IMPROVEMENTS) TULSA COUNTY

RAMP E

STA. 0+00.00 TO STA. 2+50.00

JOB PIECE NO. 10981(05) SHEET NO. X023

S:\Projects\ODOT\2015 EC-1710 I-44-169 Interchange\ACAD\PS&E\Plans\X023-X028-1098105-RAMP E.dwg, X023, 9/17/2021 3:15:08 PM

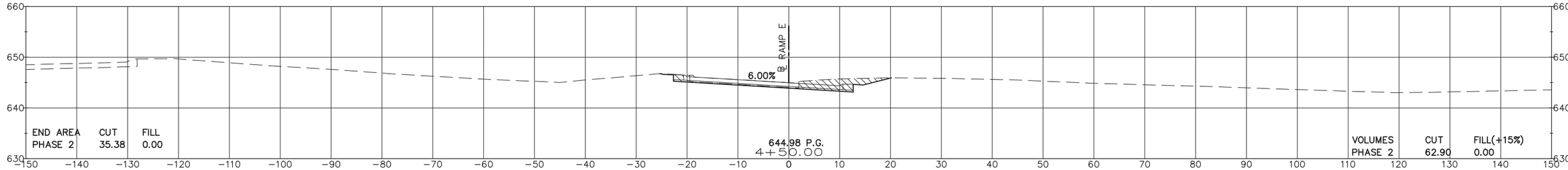

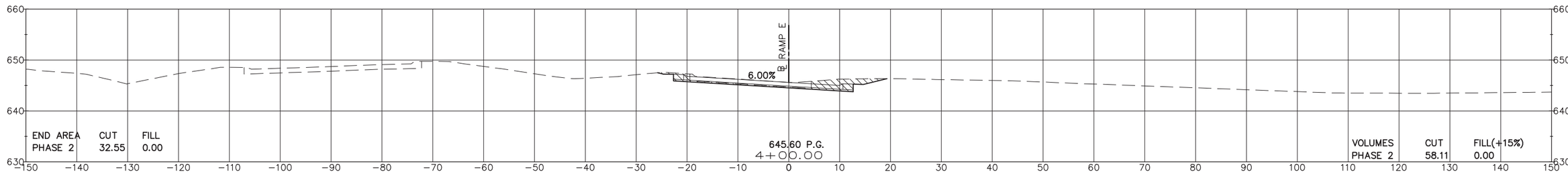

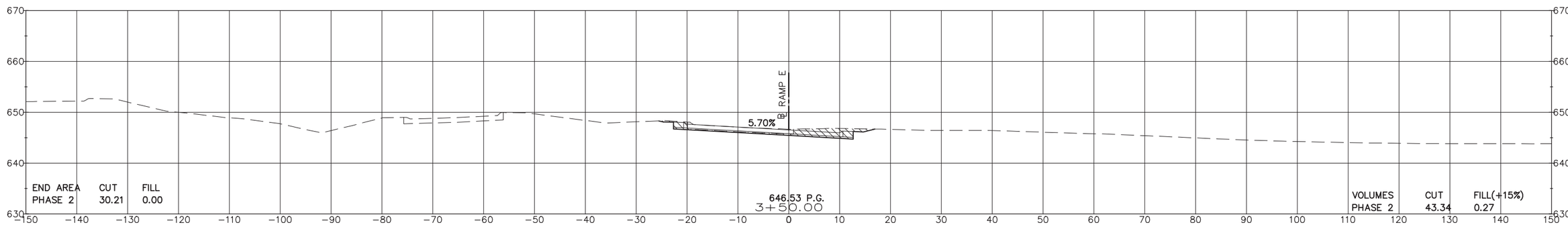

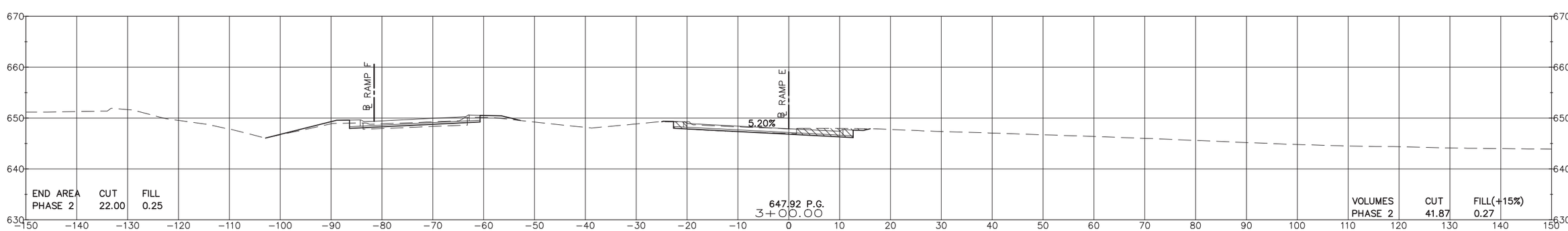

PHASE 2

Survey	CKS	
Drawn	CKD	
Checked	CKE	
Approved		
Squad	C & K	

INTERCHANGE (OPERATIONAL IMPROVEMENTS) TULSA COUNTY

RAMP E

STA. 3+00.00 TO STA. 4+50.00

JOB PIECE NO. 10981(05) SHEET NO. X024

S:\Projects\ODOT\2015 EC-1710 I-44-169 Interchange\ACAD\PS&E\Plans\X023-X028-1098105-RAMP E.dwg, X024, 9/17/2021 3:15:12 PM

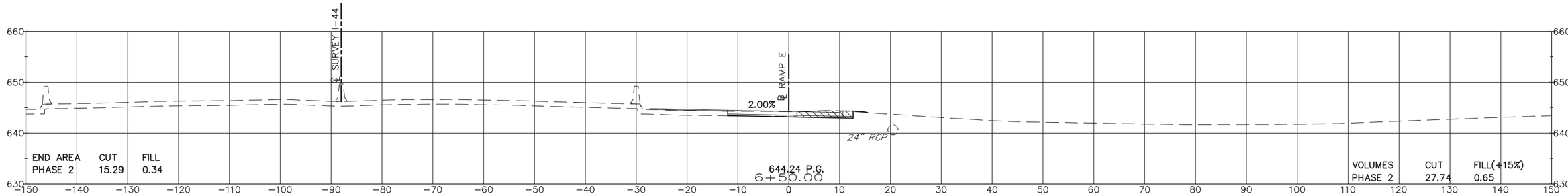

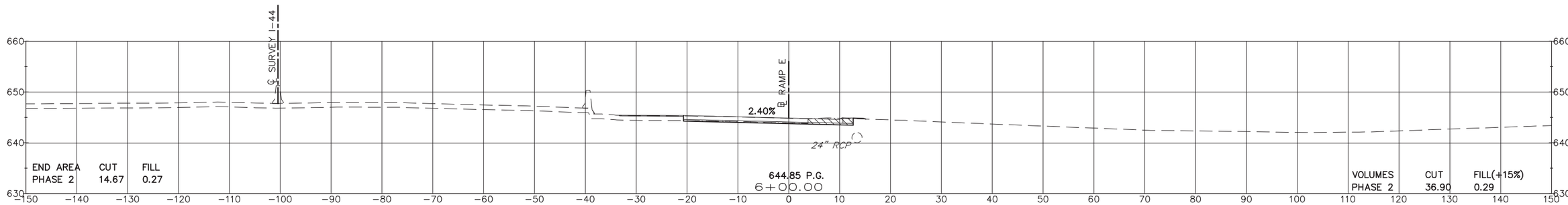

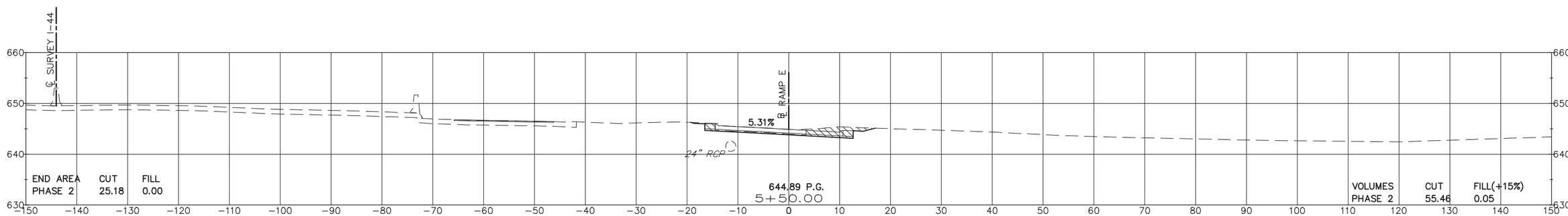

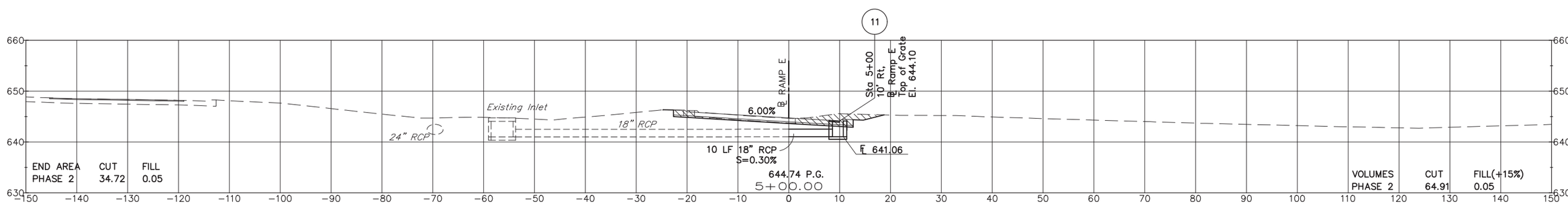

PHASE 2

Survey	CKS	
Drawn	CKD	
Checked	CKE	
Approved		
Squad	C & K	

INTERCHANGE (OPERATIONAL IMPROVEMENTS) TULSA COUNTY

RAMP E

STA. 5+00.00 TO STA. 6+50.00

JOB PIECE NO. 10981(05) SHEET NO. X025

S:\Projects\ODOT\2015 EC-1710 I-44-169 Interchange\ACAD\PS&E\Plans\X023-X028-10981(05)-RAMP E.dwg, X025, 9/17/2021 3:15:17 PM

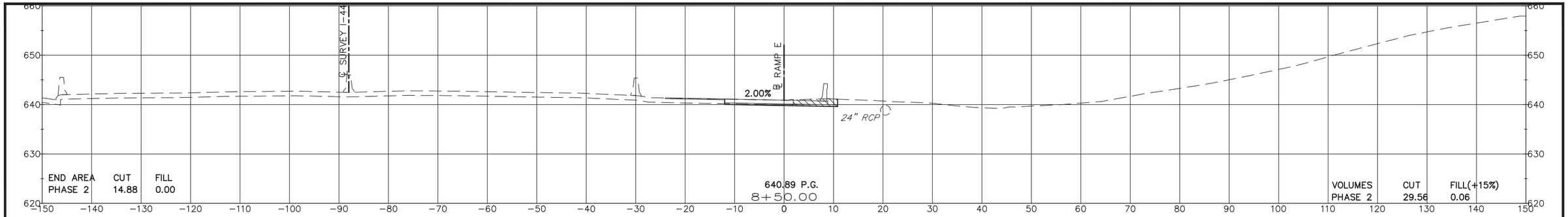

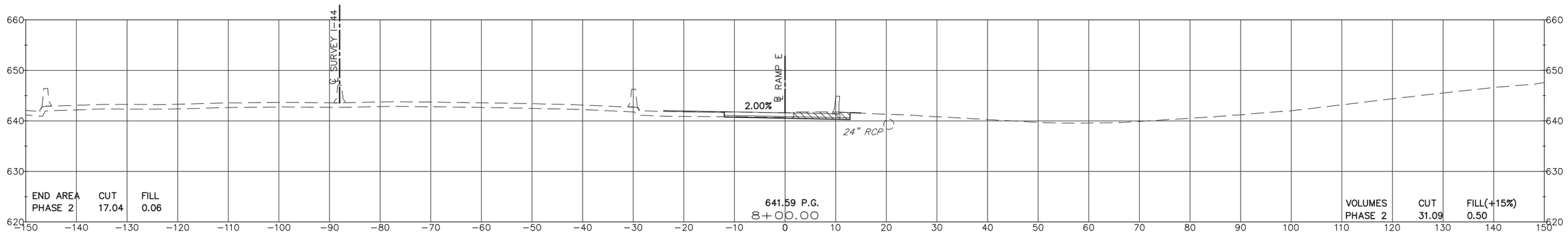

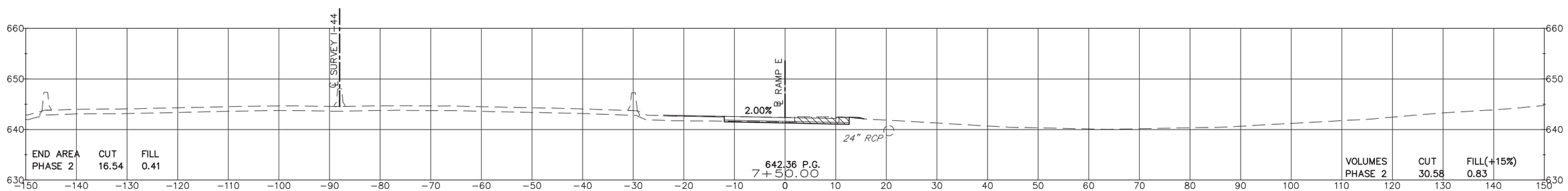

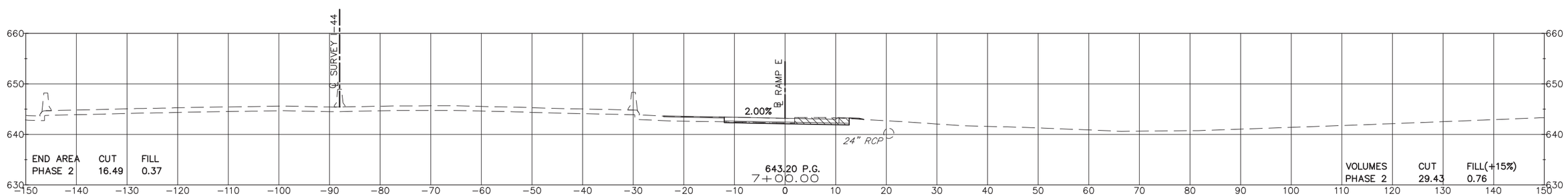

PHASE 2

Survey	CKS	
Drawn	CKD	
Checked	CKE	
Approved		
Squad	C & K	

INTERCHANGE (OPERATIONAL IMPROVEMENTS) TULSA COUNTY

RAMP E

STA. 7+00.00 TO STA. 8+50.00

JOB PIECE NO. 10981(05) SHEET NO. X026

S:\Projects\ODOT\2015 EC-1710 I-44-169 Interchange\ACAD\PS&E\Plans\X023-X028-1098105-RAMP E.dwg, X026, 9/17/2021 3:15:22 PM

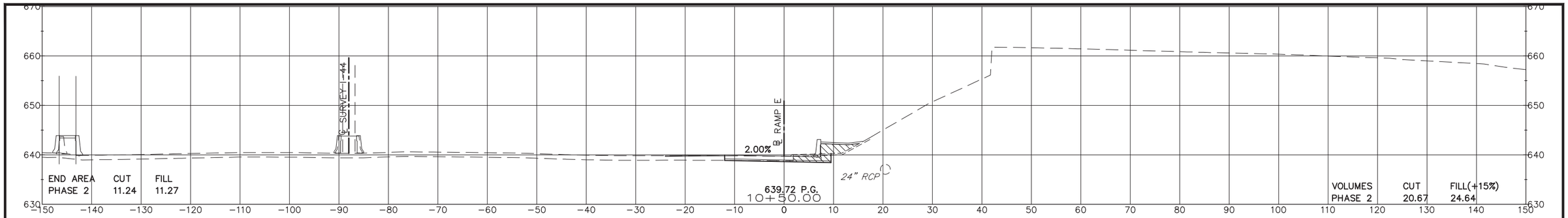

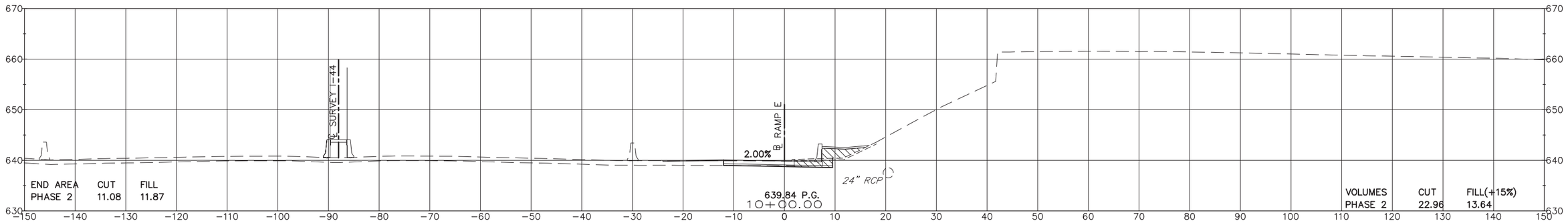

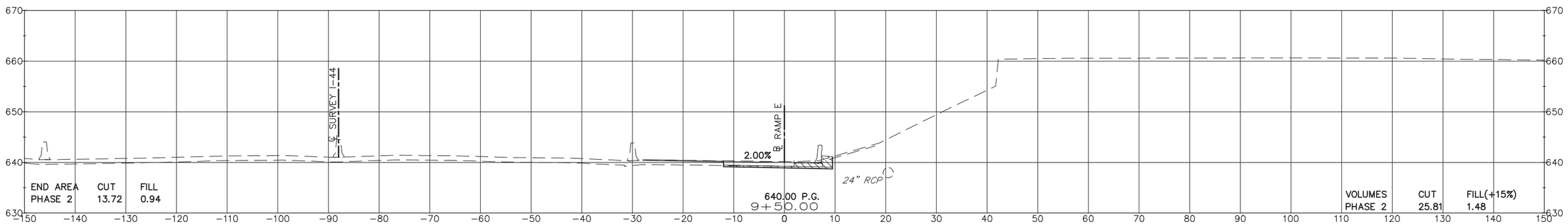

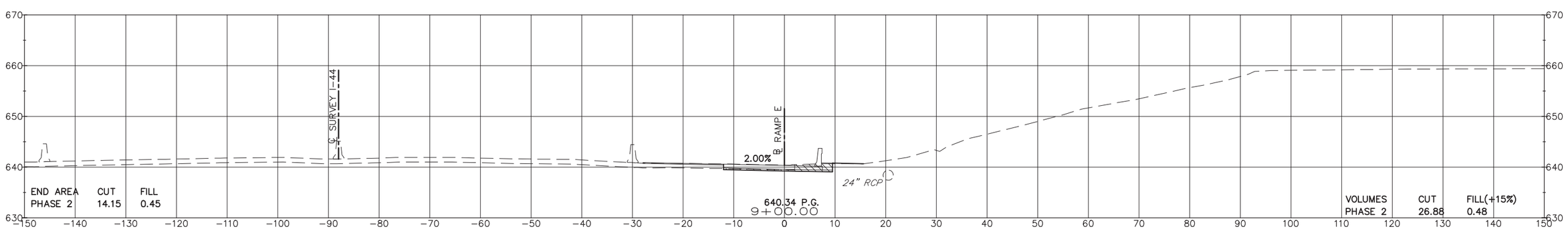

PHASE 2

Survey	CKS	
Drawn	CKD	
Checked	CKE	
Approved		
Squad	C & K	

INTERCHANGE (OPERATIONAL IMPROVEMENTS) TULSA COUNTY

RAMP E

STA. 9+00.00 TO STA. 10+50.00

JOB PIECE NO. 10981(05) SHEET NO. X027

S:\Projects\ODOT\2015 EC-1710 I-44-169 Interchange\ACAD\PS&E\Plans\X023-X028-1098105-RAMP E.dwg, X027, 9/17/2021 3:15:27 PM

END CONSTRUCTION STA 12+06.57 ℄ RAMP 'E'
= BEGIN CONSTRUCTION STA. 0+00.00 ℄ RAMP 'H'

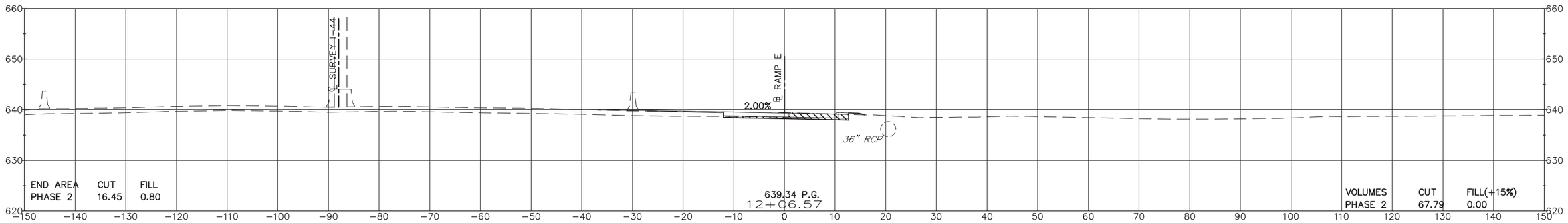

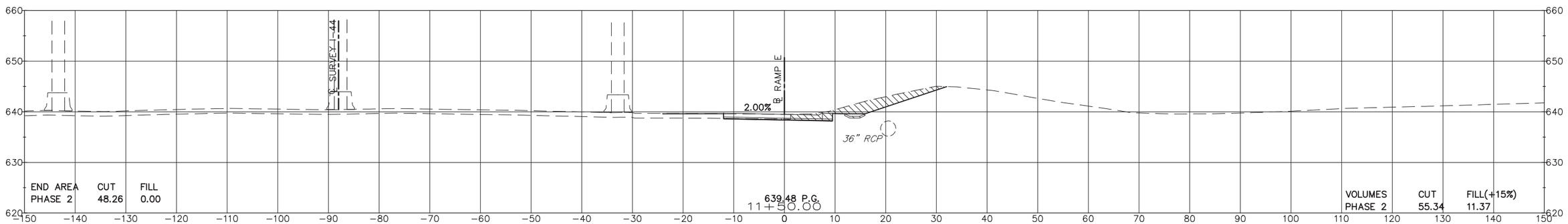

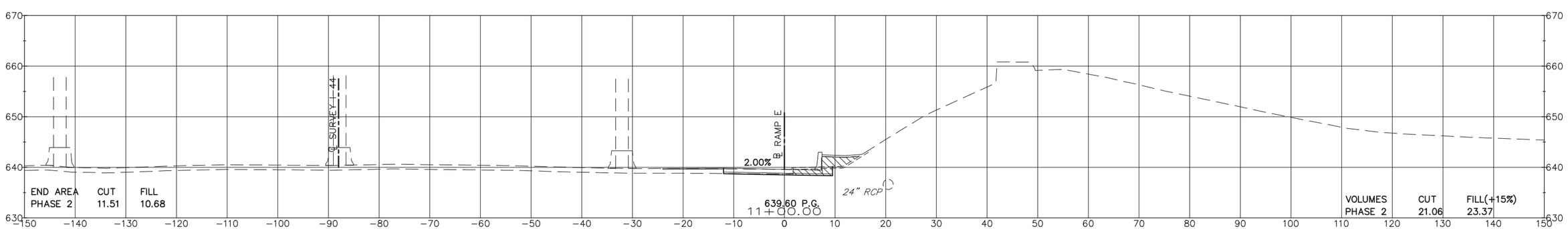

PHASE 2

Survey	CKS	
Drawn	CKD	
Checked	CKE	
Approved		
Squad	C & K	

INTERCHANGE (OPERATIONAL IMPROVEMENTS) TULSA COUNTY

RAMP E

STA. 11+00.00 TO STA. 12+06.57

JOB PIECE NO. 10981(05) SHEET NO. X028

S:\Projects\ODOT\2015 EC-1710 I-44-169 Interchange\ACAD\PS&E\Plans\X023-X028-1098105-RAMP E.dwg, X028, 9/17/2021 3:15:32 PM

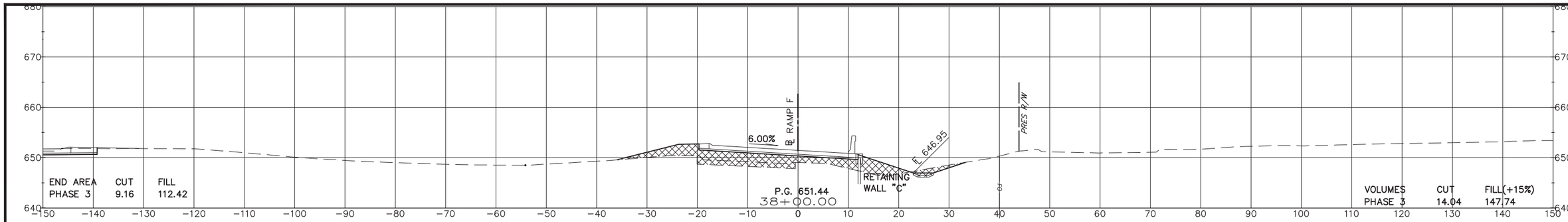

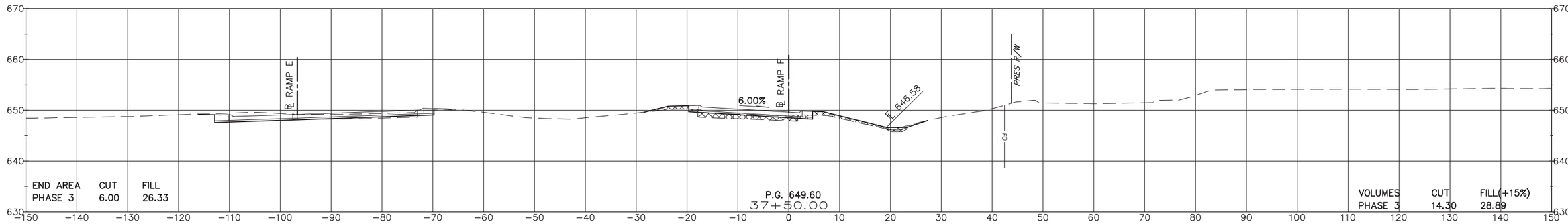

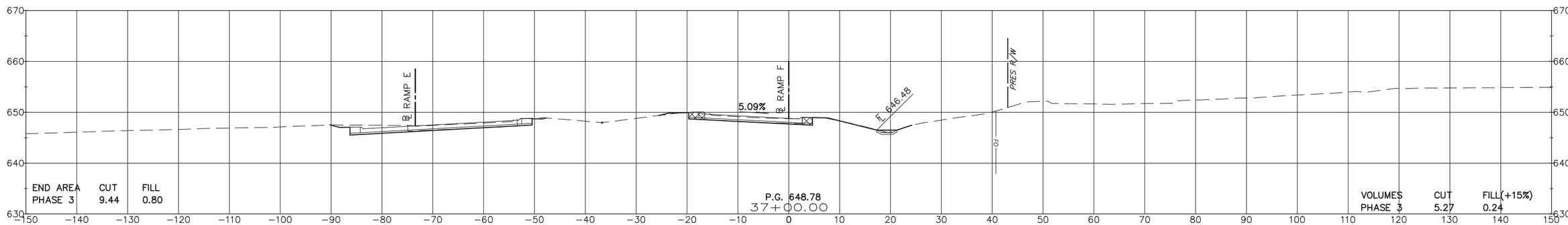

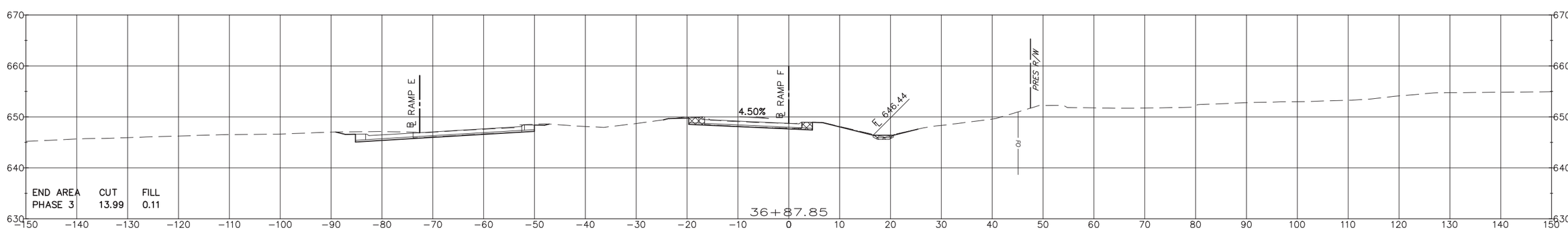

PHASE 3

Survey	CKS	
Drawn	CKD	
Checked	CKE	
Approved		
Squad	C & K	

INTERCHANGE (OPERATIONAL IMPROVEMENTS) TULSA COUNTY

RAMP F

STA. 36+87.85 TO STA. 38+00.00

JOB PIECE NO. 10981(05) SHEET NO. X029

S:\Projects\ODOT\2015 EC-1710 I-44-169 Interchange\ACAD\PS&E\Plans\X029-X031-1098105-RAMP F.dwg, X029, 9/17/2021 3:15:38 PM

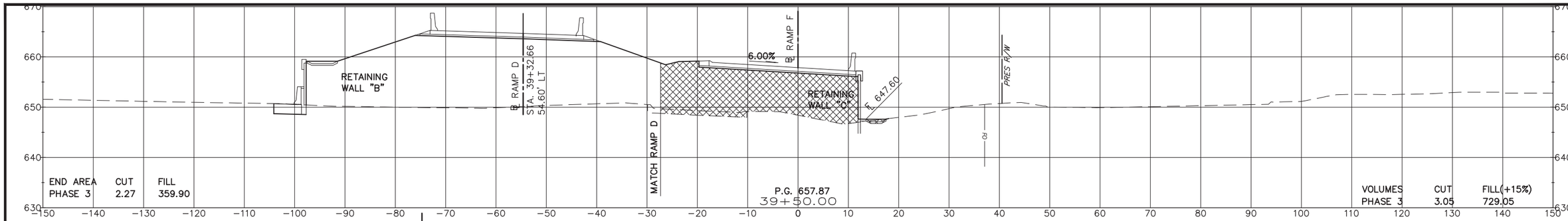

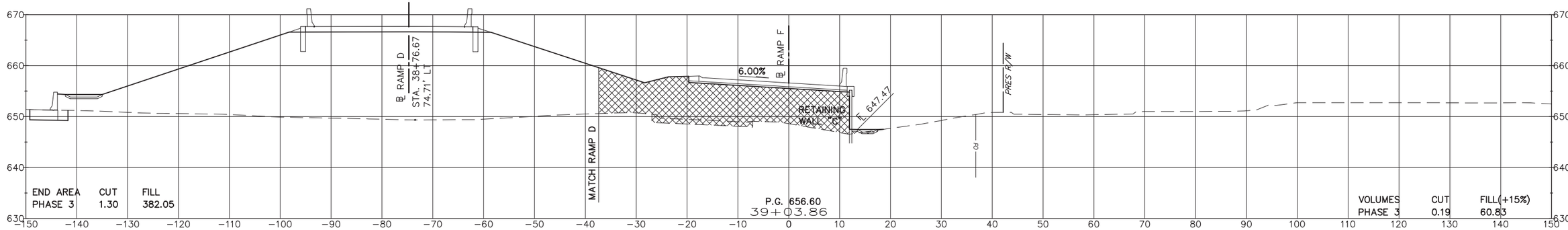

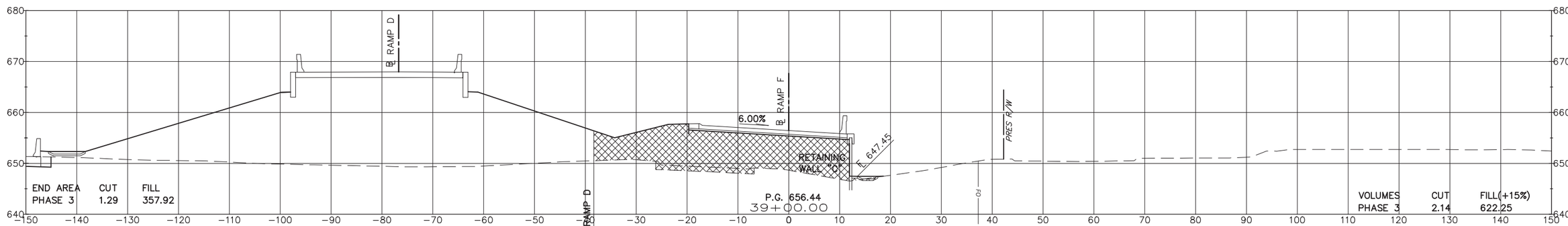

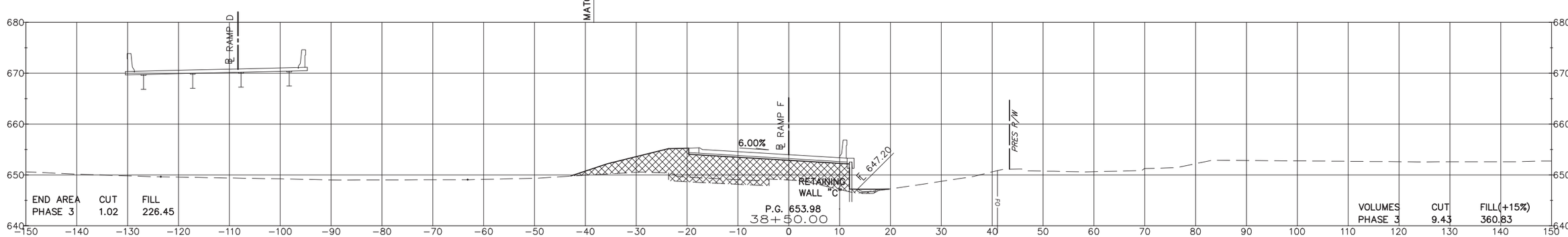

PHASE 3

Survey	CKS	
Drawn	CKD	
Checked	CKE	
Approved		
Squad	C & K	

INTERCHANGE (OPERATIONAL IMPROVEMENTS) TULSA COUNTY

RAMP F

STA. 38+50.00 TO STA. 39+50.00

JOB PIECE NO. 10981(05) SHEET NO. X030

S:\Projects\ODOT\2015 EC-1710 I-44-169 Interchange\ACAD\PS&E\Plans\X029-X031-1098105-RAMP F.dwg, X030, 9/17/2021 3:15:42 PM

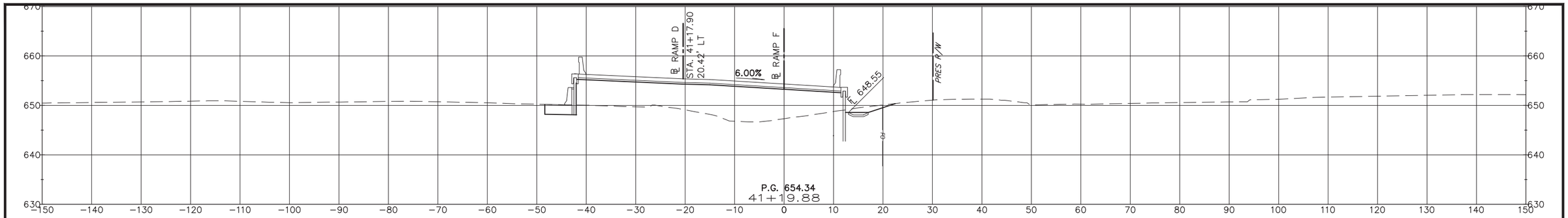

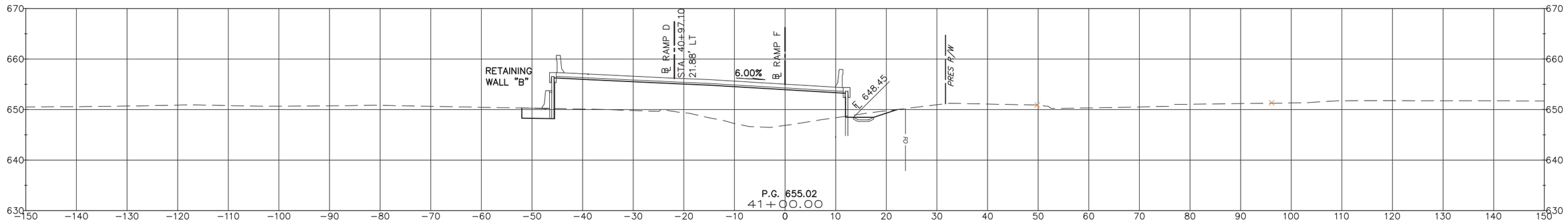

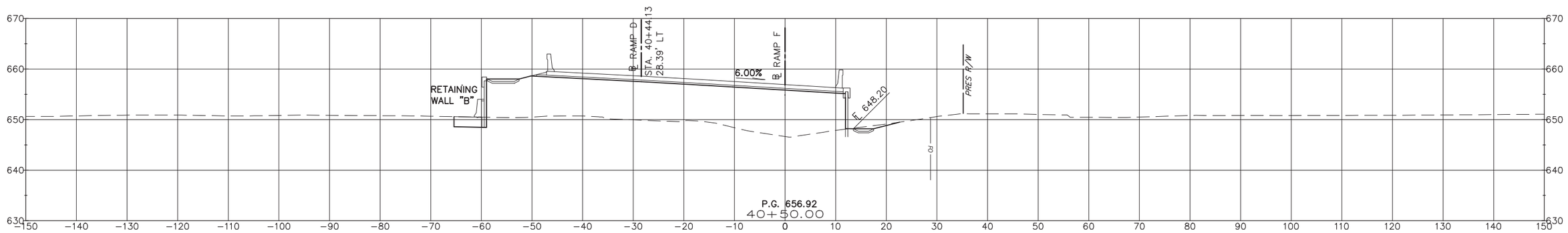

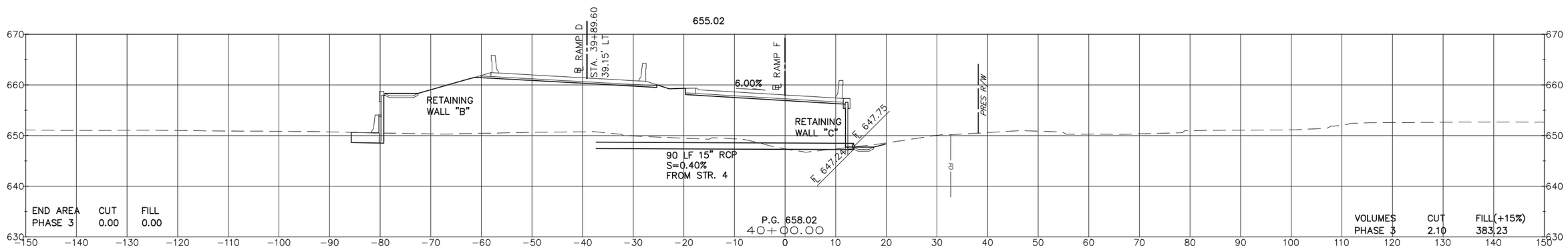

END AREA PHASE 3	CUT	FILL
	0.00	0.00

VOLUMES PHASE 3	CUT	FILL(+15%)
	2.10	383.23

PHASE 3

Survey	CKS	
Drawn	CKD	
Checked	CKE	
Approved		
Squad	C & K	

INTERCHANGE (OPERATIONAL IMPROVEMENTS) TULSA COUNTY

RAMP F

STA. 40+00.00 TO STA. 41+19.88

JOB PIECE NO. 10981(05) SHEET NO. X031

S:\Projects\ODOT\2015 EC-1710 I-44-169 Interchange\ACAD\PS&E\Plans\X029-X031-1098105-RAMP F.dwg, X031, 9/17/2021 3:15:47 PM

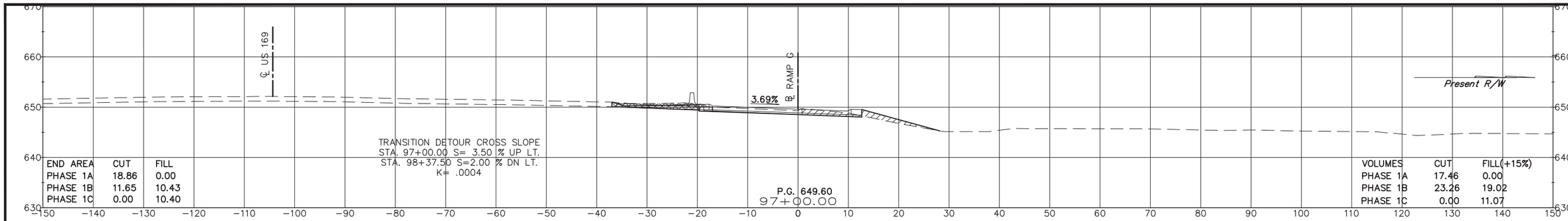

END AREA	CUT	FILL
PHASE 1A	18.86	0.00
PHASE 1B	11.65	10.43
PHASE 1C	0.00	10.40

VOLUMES	CUT	FILL(+15%)
PHASE 1A	17.46	0.00
PHASE 1B	23.26	19.02
PHASE 1C	0.00	11.07

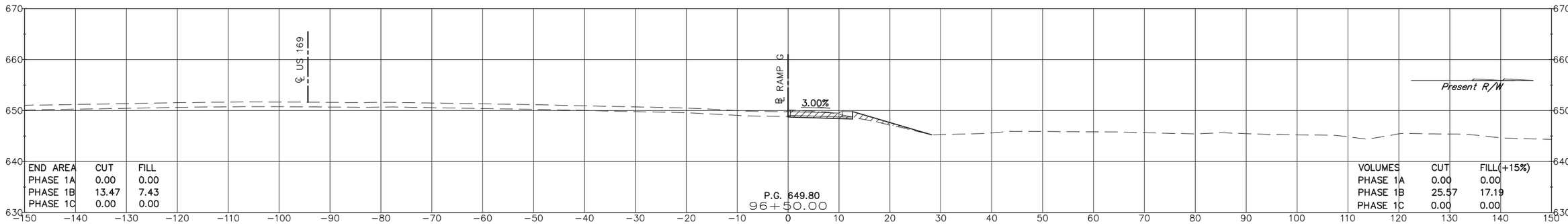

END AREA	CUT	FILL
PHASE 1A	0.00	0.00
PHASE 1B	13.47	7.43
PHASE 1C	0.00	0.00

VOLUMES	CUT	FILL(+15%)
PHASE 1A	0.00	0.00
PHASE 1B	25.57	17.19
PHASE 1C	0.00	0.00

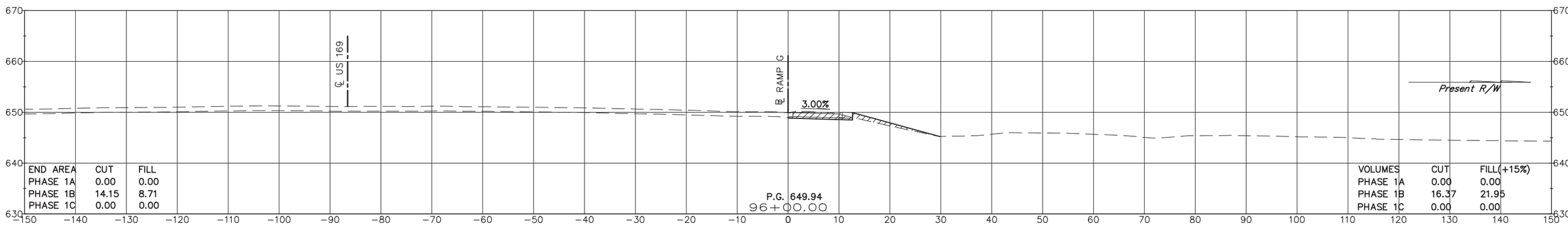

END AREA	CUT	FILL
PHASE 1A	0.00	0.00
PHASE 1B	14.15	8.71
PHASE 1C	0.00	0.00

VOLUMES	CUT	FILL(+15%)
PHASE 1A	0.00	0.00
PHASE 1B	16.37	21.95
PHASE 1C	0.00	0.00

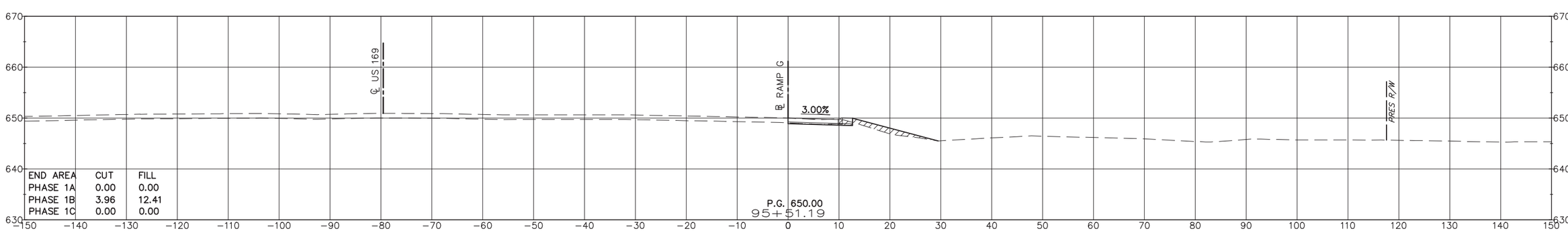

END AREA	CUT	FILL
PHASE 1A	0.00	0.00
PHASE 1B	3.96	12.41
PHASE 1C	0.00	0.00

END INCIDENTAL CONSTRUCTION STA 95+51.19
BEGIN CONSTRUCTION STA 95+51.19

BEGIN INCIDENTAL CONSTRUCTION STA 90+00.00

PHASE 1A TEMP. WIDENING | PHASE 1B PERM. CONST. | PHASE 1C PERM. CONST. LT.

Survey	CKS	
Drawn	CKD	
Checked	CKE	
Approved		
Squad	C & K	

INTERCHANGE (OPERATIONAL IMPROVEMENTS) TULSA COUNTY

RAMP G

STA. 95+51.19 TO STA. 97+00.00

JOB PIECE NO. 10981(05) SHEET NO. X032

S:\Projects\ODOT\2015 EC-1710 I-44-169 Interchange\ACAD\PS&E\Plans\X032-X049-1098105-RAMP G.dwg, X032, 9/17/2021 3:15:57 PM

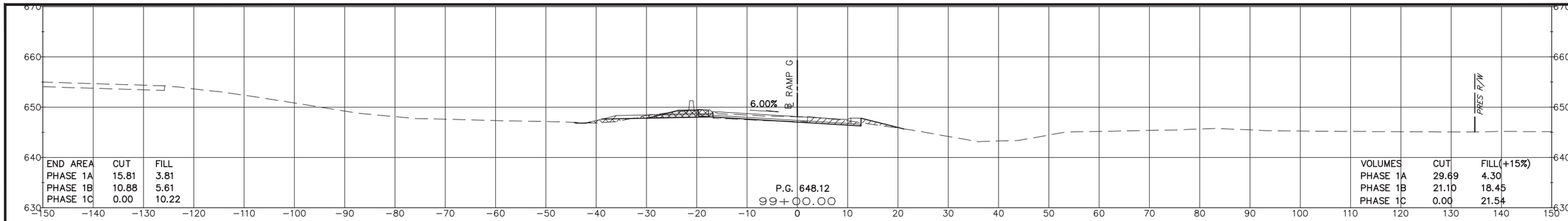

END AREA	CUT	FILL
PHASE 1A	15.81	3.81
PHASE 1B	10.88	5.61
PHASE 1C	0.00	10.22

VOLUMES	CUT	FILL(+15%)
PHASE 1A	29.69	4.30
PHASE 1B	21.10	18.45
PHASE 1C	0.00	21.54

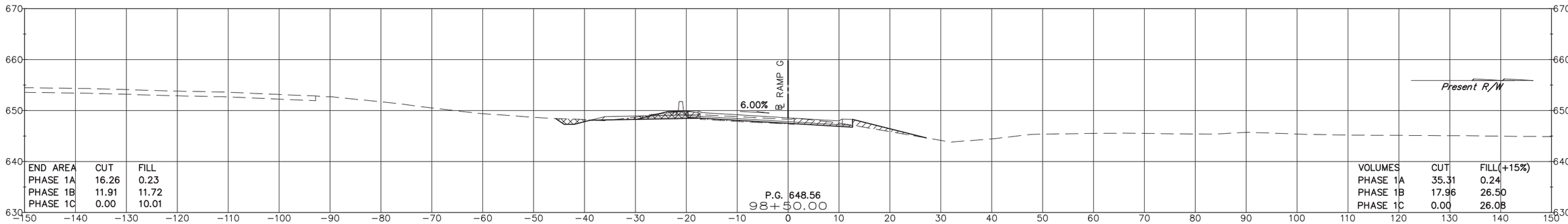

END AREA	CUT	FILL
PHASE 1A	16.26	0.23
PHASE 1B	11.91	11.72
PHASE 1C	0.00	10.01

VOLUMES	CUT	FILL(+15%)
PHASE 1A	35.31	0.24
PHASE 1B	17.96	26.50
PHASE 1C	0.00	26.08

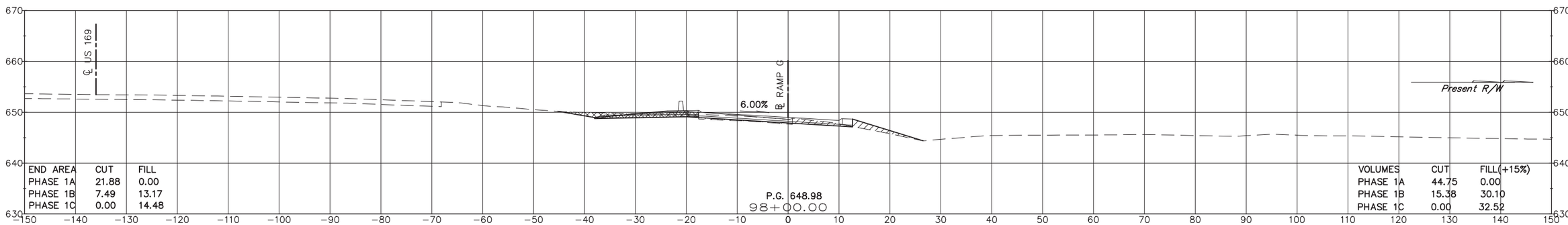

END AREA	CUT	FILL
PHASE 1A	21.88	0.00
PHASE 1B	7.49	13.17
PHASE 1C	0.00	14.48

VOLUMES	CUT	FILL(+15%)
PHASE 1A	44.75	0.00
PHASE 1B	15.38	30.10
PHASE 1C	0.00	32.52

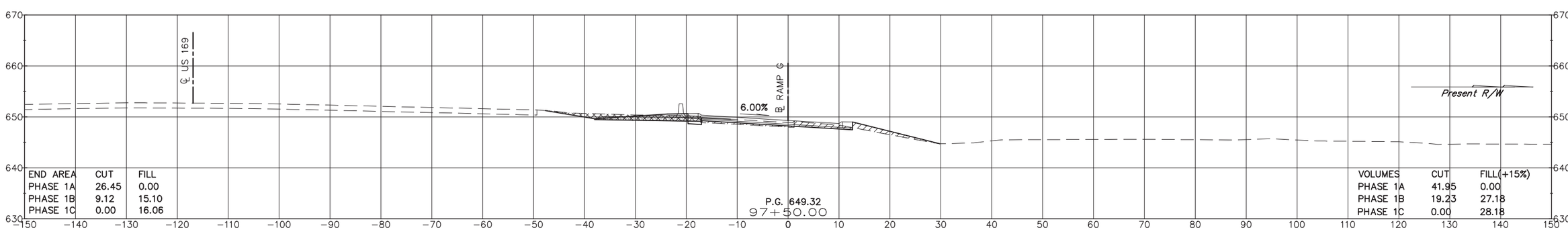

END AREA	CUT	FILL
PHASE 1A	26.45	0.00
PHASE 1B	9.12	15.10
PHASE 1C	0.00	16.06

VOLUMES	CUT	FILL(+15%)
PHASE 1A	41.95	0.00
PHASE 1B	19.23	27.18
PHASE 1C	0.00	28.18

PHASE 1A TEMP. WIDENING

PHASE 1B PERM. CONST.

PHASE 1C PERM. CONST. LT.

Survey	CKS	
Drawn	CKD	
Checked	CKE	
Approved		
Squad	C & K	

INTERCHANGE (OPERATIONAL IMPROVEMENTS) TULSA COUNTY

RAMP G

STA. 97+50.00 TO STA. 99+00.00

JOB PIECE NO. 10981(05) SHEET NO. X033

S:\Projects\ODOT\2015 EC-1710 I-44-169 Interchange\ACAD\PS&E\Plans\X032-X049-1098105-RAMP G.dwg, X033, 9/17/2021 3:15:54 PM

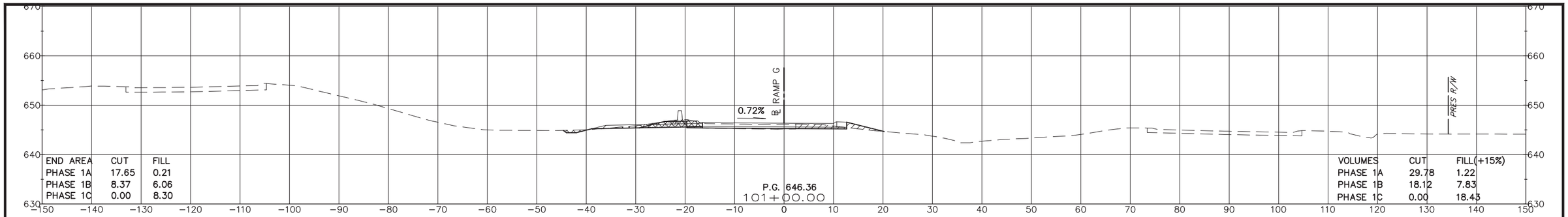

END AREA	CUT	FILL
PHASE 1A	17.65	0.21
PHASE 1B	8.37	6.06
PHASE 1C	0.00	8.30

VOLUMES	CUT	FILL(+15%)
PHASE 1A	29.78	1.22
PHASE 1B	18.12	7.83
PHASE 1C	0.00	18.43

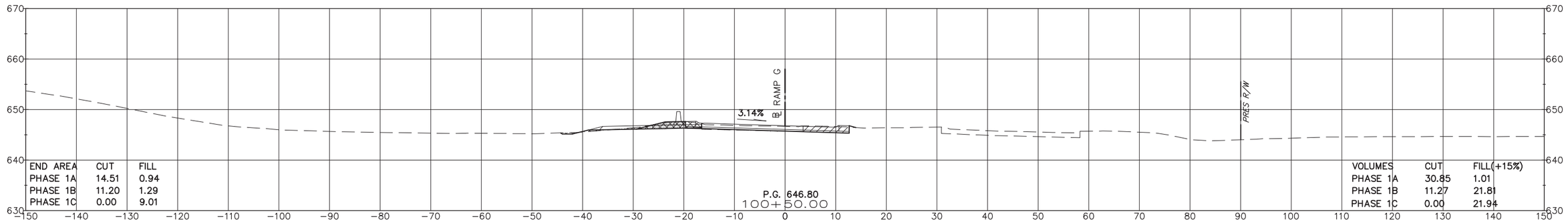

END AREA	CUT	FILL
PHASE 1A	14.51	0.94
PHASE 1B	11.20	1.29
PHASE 1C	0.00	9.01

VOLUMES	CUT	FILL(+15%)
PHASE 1A	30.85	1.01
PHASE 1B	11.27	21.81
PHASE 1C	0.00	21.94

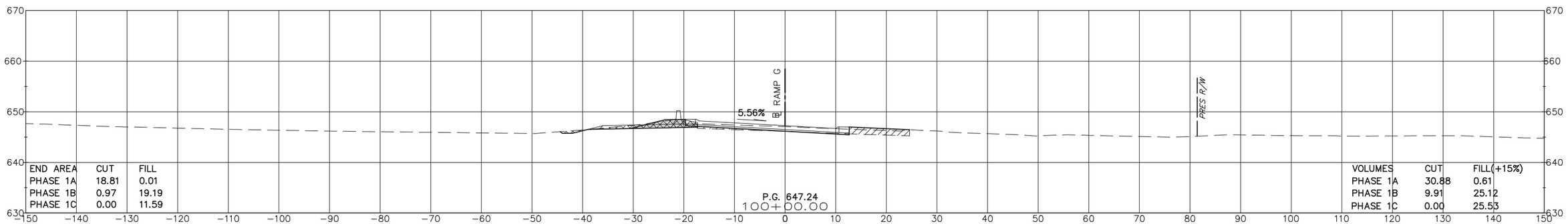

END AREA	CUT	FILL
PHASE 1A	18.81	0.01
PHASE 1B	0.97	19.19
PHASE 1C	0.00	11.59

VOLUMES	CUT	FILL(+15%)
PHASE 1A	30.88	0.61
PHASE 1B	9.91	25.12
PHASE 1C	0.00	25.53

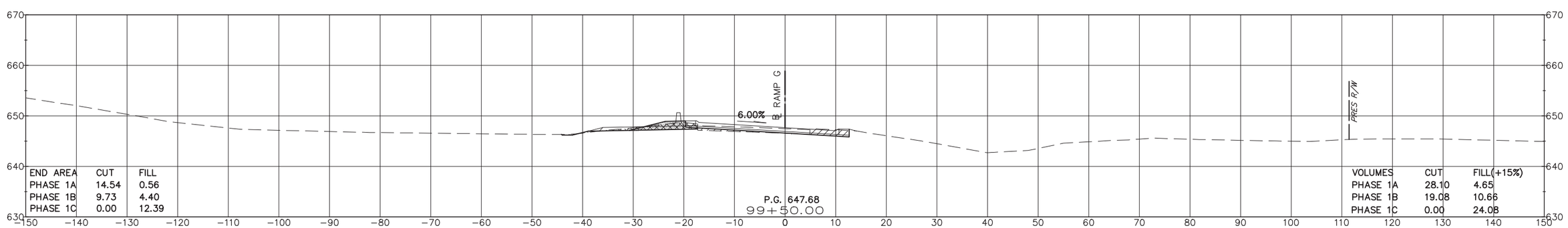

END AREA	CUT	FILL
PHASE 1A	14.54	0.56
PHASE 1B	9.73	4.40
PHASE 1C	0.00	12.39

VOLUMES	CUT	FILL(+15%)
PHASE 1A	28.10	4.65
PHASE 1B	19.08	10.66
PHASE 1C	0.00	24.08

PHASE 1A TEMP. WIDENING

PHASE 1B PERM. CONST.

PHASE 1C PERM. CONST. LT.

Survey	CKS	
Drawn	CKD	
Checked	CKE	
Approved		
Squad	C & K	

INTERCHANGE (OPERATIONAL IMPROVEMENTS) TULSA COUNTY

RAMP G

STA. 99+50.00 TO STA. 101+00.00

JOB PIECE NO. 10981(05) SHEET NO. X034

S:\Projects\ODOT\2015 EC-1710 I-44-169 Interchange\ACAD\PS&E\Plans\X032-X049-1098105-RAMP G.dwg, X034, 9/17/2021 3:16:02 PM

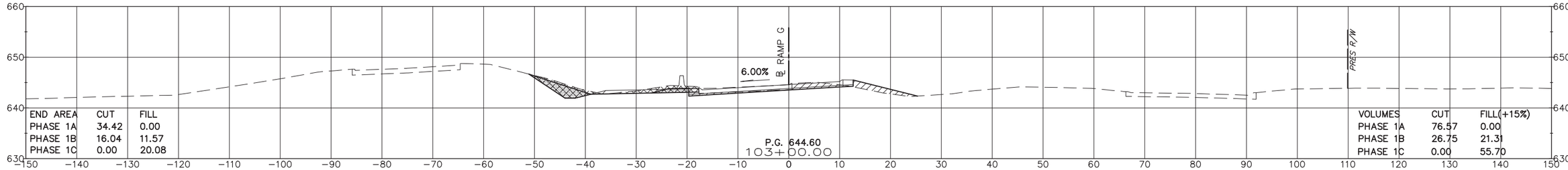

END AREA	CUT	FILL
PHASE 1A	34.42	0.00
PHASE 1B	16.04	11.57
PHASE 1C	0.00	20.08

VOLUMES	CUT	FILL(+15%)
PHASE 1A	76.57	0.00
PHASE 1B	26.75	21.31
PHASE 1C	0.00	55.70

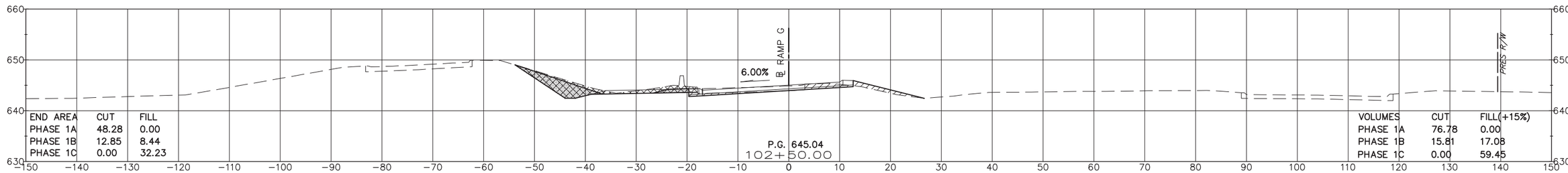

END AREA	CUT	FILL
PHASE 1A	48.28	0.00
PHASE 1B	12.85	8.44
PHASE 1C	0.00	32.23

VOLUMES	CUT	FILL(+15%)
PHASE 1A	76.78	0.00
PHASE 1B	15.81	17.08
PHASE 1C	0.00	59.45

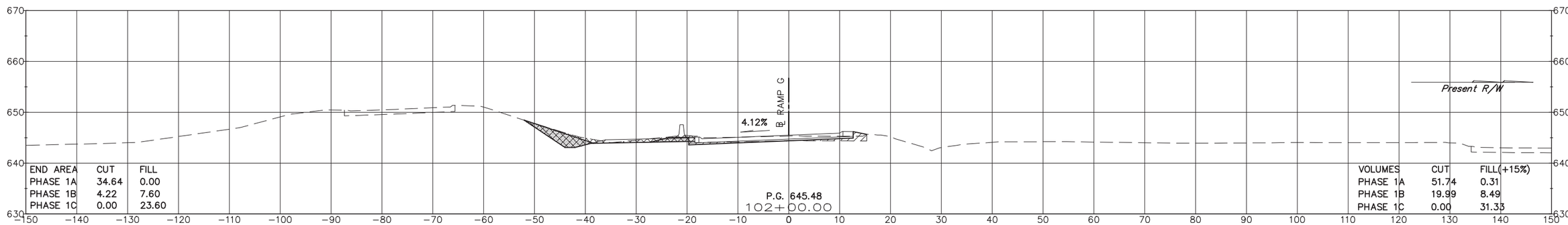

END AREA	CUT	FILL
PHASE 1A	34.64	0.00
PHASE 1B	4.22	7.60
PHASE 1C	0.00	23.60

VOLUMES	CUT	FILL(+15%)
PHASE 1A	51.74	0.31
PHASE 1B	19.99	8.49
PHASE 1C	0.00	31.33

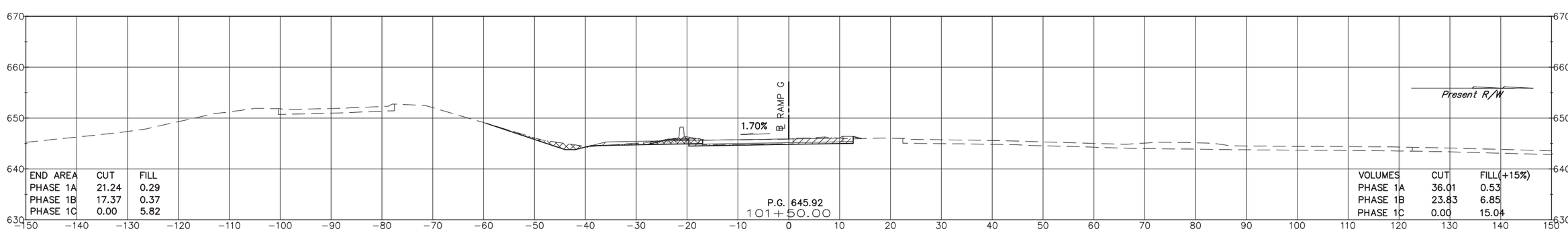

END AREA	CUT	FILL
PHASE 1A	21.24	0.29
PHASE 1B	17.37	0.37
PHASE 1C	0.00	5.82

VOLUMES	CUT	FILL(+15%)
PHASE 1A	36.01	0.53
PHASE 1B	23.83	6.85
PHASE 1C	0.00	15.04

PHASE 1A TEMP. WIDENING

PHASE 1B PERM. CONST.

PHASE 1C PERM. CONST. LT.

Survey	CKS	
Drawn	CKD	
Checked	CKE	
Approved		
Squad	C & K	

INTERCHANGE (OPERATIONAL IMPROVEMENTS) TULSA COUNTY

RAMP G

STA. 101+50.00 TO STA. 103+00.00

JOB PIECE NO. 10981(05) SHEET NO. X035

S:\Projects\ODOT\2015 EC-1710 I-44-169 Interchange\ACAD\PS&E\Plans\X032-X049-1098105-RAMP G.dwg, X035, 9/17/2021 3:16:07 PM

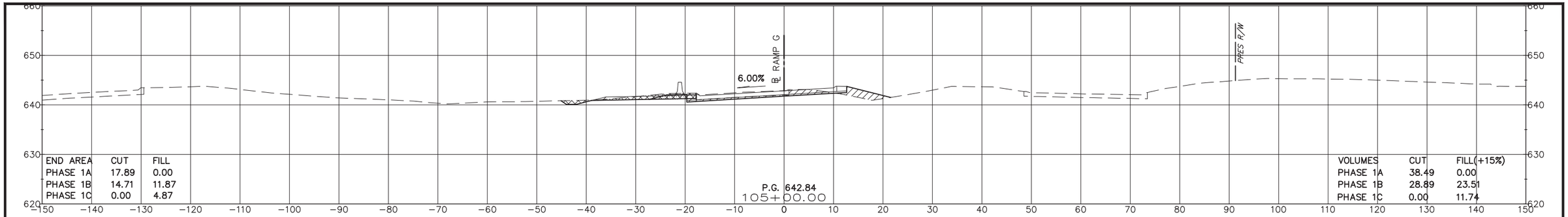

END AREA	CUT	FILL
PHASE 1A	17.89	0.00
PHASE 1B	14.71	11.87
PHASE 1C	0.00	4.87

VOLUMES	CUT	FILL(+15%)
PHASE 1A	38.49	0.00
PHASE 1B	28.89	23.51
PHASE 1C	0.00	11.74

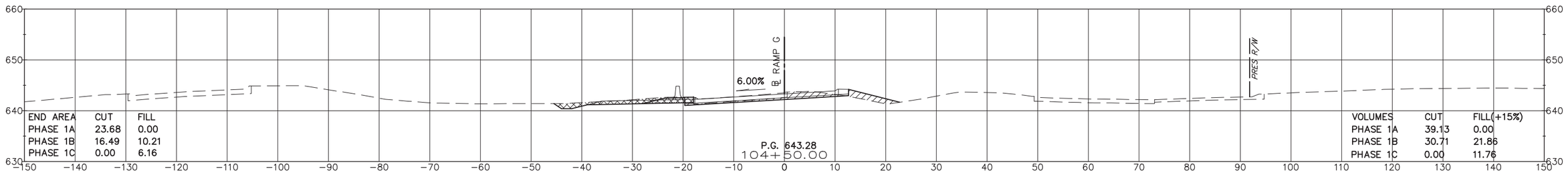

END AREA	CUT	FILL
PHASE 1A	23.68	0.00
PHASE 1B	16.49	10.21
PHASE 1C	0.00	6.16

VOLUMES	CUT	FILL(+15%)
PHASE 1A	39.13	0.00
PHASE 1B	30.71	21.86
PHASE 1C	0.00	11.76

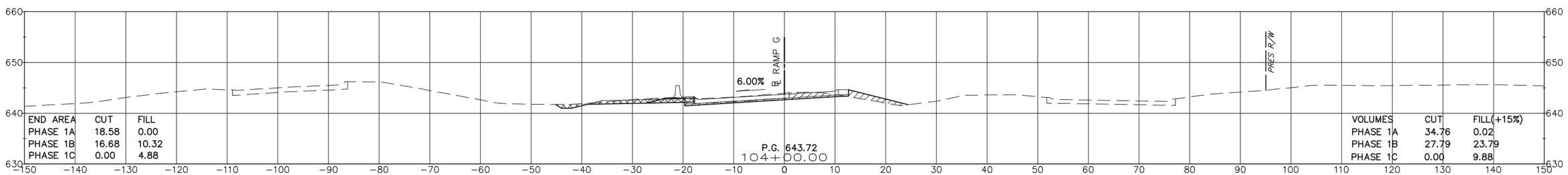

END AREA	CUT	FILL
PHASE 1A	18.58	0.00
PHASE 1B	16.68	10.32
PHASE 1C	0.00	4.88

VOLUMES	CUT	FILL(+15%)
PHASE 1A	34.76	0.02
PHASE 1B	27.79	23.79
PHASE 1C	0.00	9.88

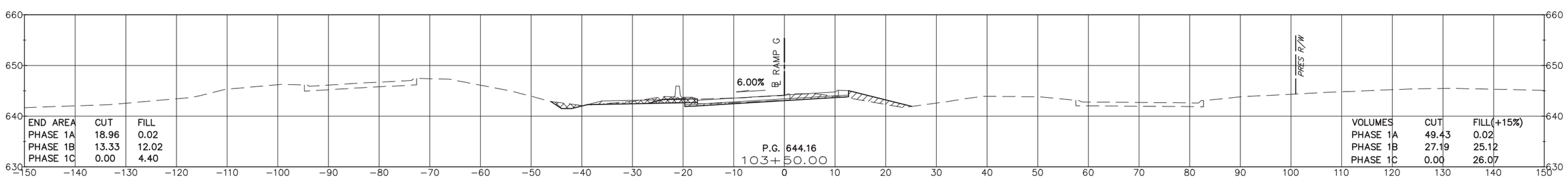

END AREA	CUT	FILL
PHASE 1A	18.96	0.02
PHASE 1B	13.33	12.02
PHASE 1C	0.00	4.40

VOLUMES	CUT	FILL(+15%)
PHASE 1A	49.43	0.02
PHASE 1B	27.19	25.12
PHASE 1C	0.00	26.07

PHASE 1A TEMP. WIDENING

PHASE 1B PERM. CONST.

PHASE 1C PERM. CONST. LT.

Survey	CKS	
Drawn	CKD	
Checked	CKE	
Approved		
Squad	C & K	

INTERCHANGE (OPERATIONAL IMPROVEMENTS) TULSA COUNTY

RAMP G

STA. 103+50.00 TO STA. 105+00.00

JOB PIECE NO. 10981(05) SHEET NO. X036

S:\Projects\ODOT\2015 EC-1710 I-44-169 Interchange\ACAD\PS&E\Plans\X032-X049-10981(05)-RAMP G.dwg, X036, 9/17/2021 3:16:12 PM

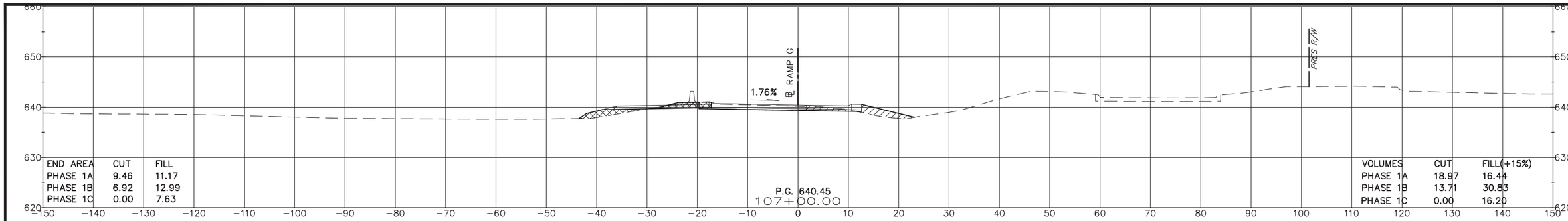

END AREA	CUT	FILL
PHASE 1A	9.46	11.17
PHASE 1B	6.92	12.99
PHASE 1C	0.00	7.63

VOLUMES	CUT	FILL(+15%)
PHASE 1A	18.97	16.44
PHASE 1B	13.71	30.83
PHASE 1C	0.00	16.20

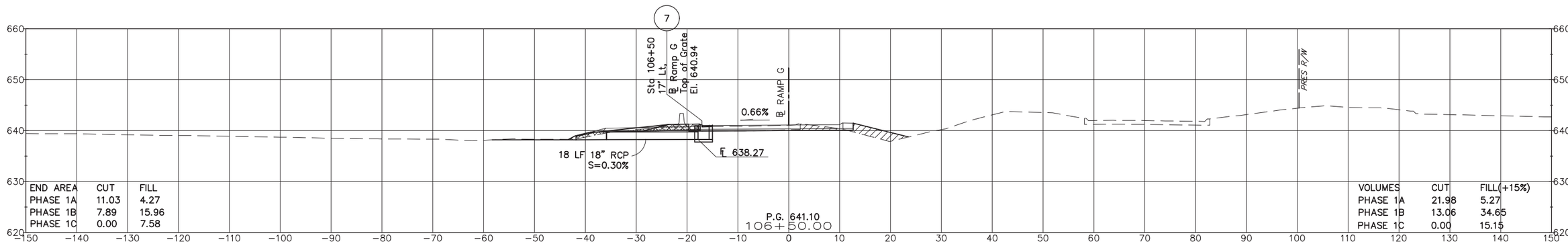

END AREA	CUT	FILL
PHASE 1A	11.03	4.27
PHASE 1B	7.89	15.96
PHASE 1C	0.00	7.58

VOLUMES	CUT	FILL(+15%)
PHASE 1A	21.98	5.27
PHASE 1B	13.06	34.65
PHASE 1C	0.00	15.15

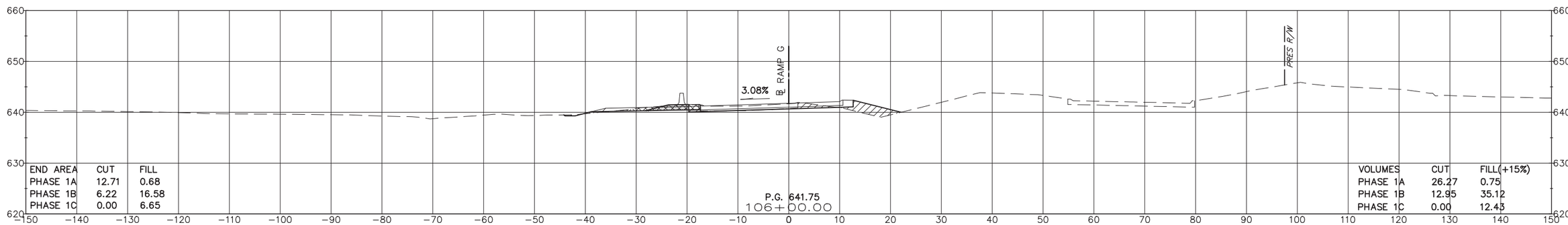

END AREA	CUT	FILL
PHASE 1A	12.71	0.68
PHASE 1B	6.22	16.58
PHASE 1C	0.00	6.65

VOLUMES	CUT	FILL(+15%)
PHASE 1A	26.27	0.75
PHASE 1B	12.95	35.12
PHASE 1C	0.00	12.43

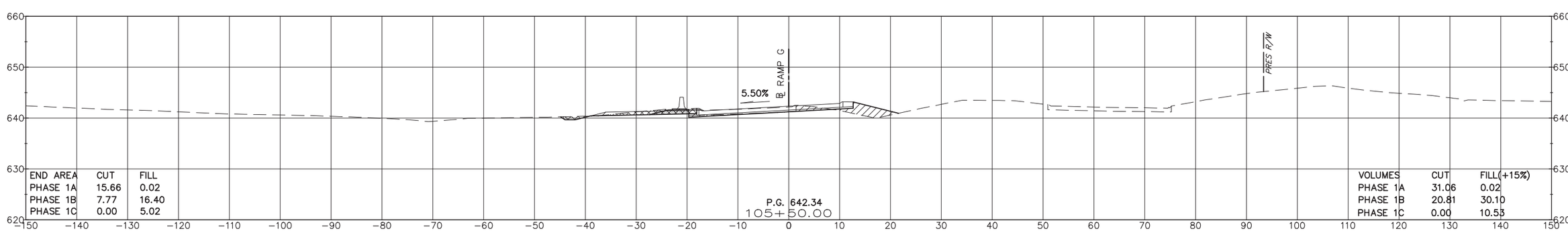

END AREA	CUT	FILL
PHASE 1A	15.66	0.02
PHASE 1B	7.77	16.40
PHASE 1C	0.00	5.02

VOLUMES	CUT	FILL(+15%)
PHASE 1A	31.06	0.02
PHASE 1B	20.81	30.10
PHASE 1C	0.00	10.53

PHASE 1A TEMP. WIDENING

PHASE 1B PERM. CONST.

PHASE 1C PERM. CONST. LT.

Survey	CKS	
Drawn	CKD	
Checked	CKE	
Approved		
Squad	C & K	

INTERCHANGE (OPERATIONAL IMPROVEMENTS) TULSA COUNTY

RAMP G

STA. 105+50.00 TO STA. 107+00.00

JOB PIECE NO. 10981(05) SHEET NO. X037

S:\Projects\ODOT\2015 EC-1710 I-44-169 Interchange\ACAD\PS&E\Plans\X032-X049-1098105-RAMP G.dwg, X037, 9/17/2021 3:16:17 PM

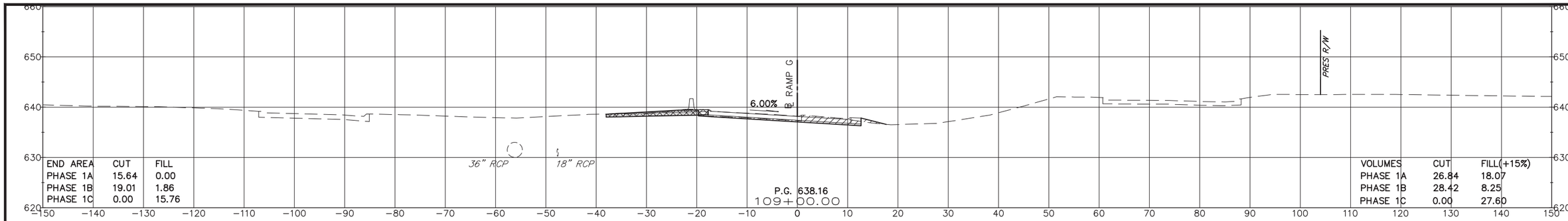

END AREA	CUT	FILL
PHASE 1A	15.64	0.00
PHASE 1B	19.01	1.86
PHASE 1C	0.00	15.76

VOLUMES	CUT	FILL(+15%)
PHASE 1A	26.84	18.07
PHASE 1B	28.42	8.25
PHASE 1C	0.00	27.60

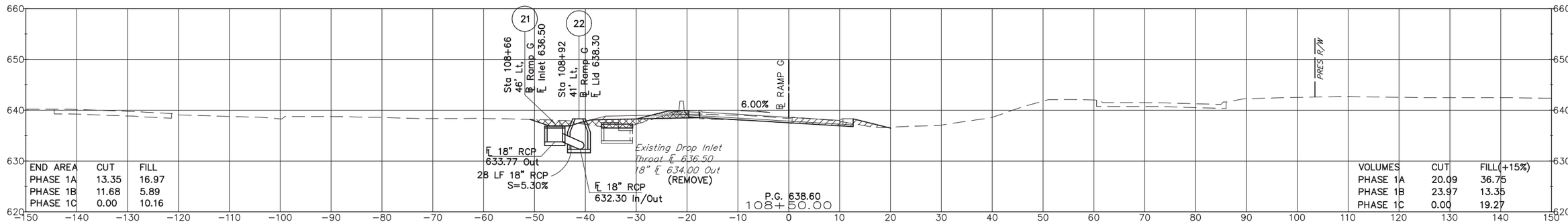

END AREA	CUT	FILL
PHASE 1A	13.35	16.97
PHASE 1B	11.68	5.89
PHASE 1C	0.00	10.16

VOLUMES	CUT	FILL(+15%)
PHASE 1A	20.09	36.75
PHASE 1B	23.97	13.35
PHASE 1C	0.00	19.27

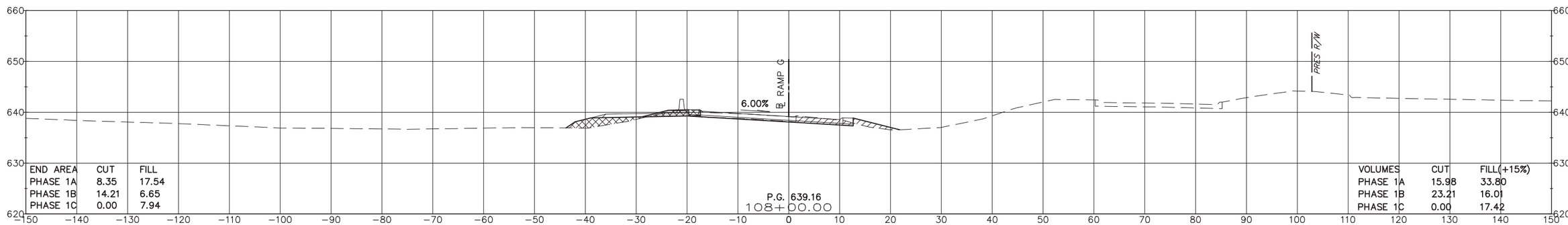

END AREA	CUT	FILL
PHASE 1A	8.35	17.54
PHASE 1B	14.21	6.65
PHASE 1C	0.00	7.94

VOLUMES	CUT	FILL(+15%)
PHASE 1A	15.98	33.80
PHASE 1B	23.21	16.01
PHASE 1C	0.00	17.42

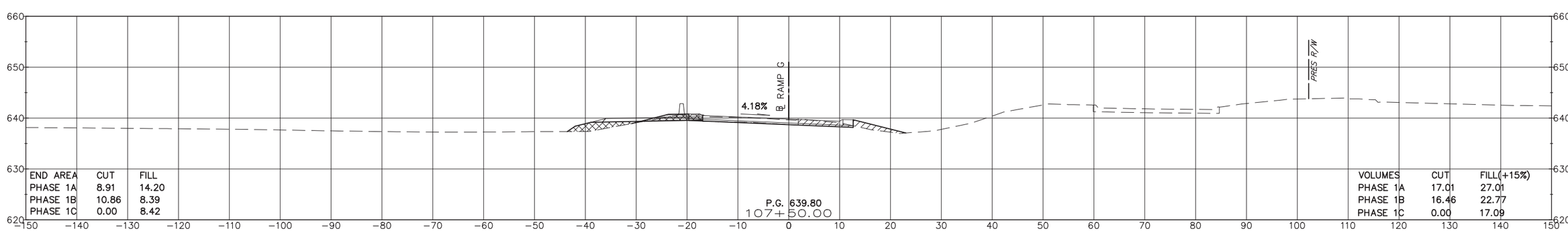

END AREA	CUT	FILL
PHASE 1A	8.91	14.20
PHASE 1B	10.86	8.39
PHASE 1C	0.00	8.42

VOLUMES	CUT	FILL(+15%)
PHASE 1A	17.01	27.01
PHASE 1B	16.46	22.77
PHASE 1C	0.00	17.09

PHASE 1A TEMP. WIDENING

PHASE 1B PERM. CONST.

PHASE 1C PERM. CONST. LT.

Survey	CKS	
Drawn	CKD	
Checked	CKE	
Approved		
Squad	C & K	

INTERCHANGE (OPERATIONAL IMPROVEMENTS) TULSA COUNTY

RAMP G

STA. 107+50.00 TO STA. 109+00.00

JOB PIECE NO. 10981(05) SHEET NO. X038

S:\Projects\ODOT\2015 EC-1710 I-44-169 Interchange\ACAD\PS&E\Plans\X032-X049-1098105-RAMP G.dwg, X038, 9/17/2021 3:16:22 PM

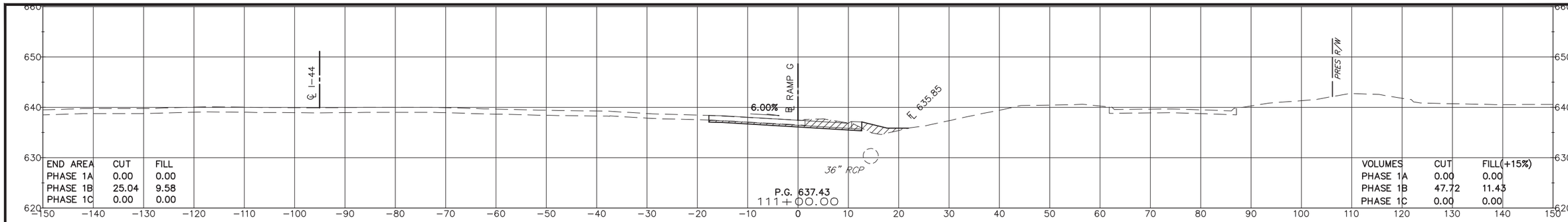

END AREA	CUT	FILL
PHASE 1A	0.00	0.00
PHASE 1B	25.04	9.58
PHASE 1C	0.00	0.00

VOLUMES	CUT	FILL(+15%)
PHASE 1A	0.00	0.00
PHASE 1B	47.72	11.43
PHASE 1C	0.00	0.00

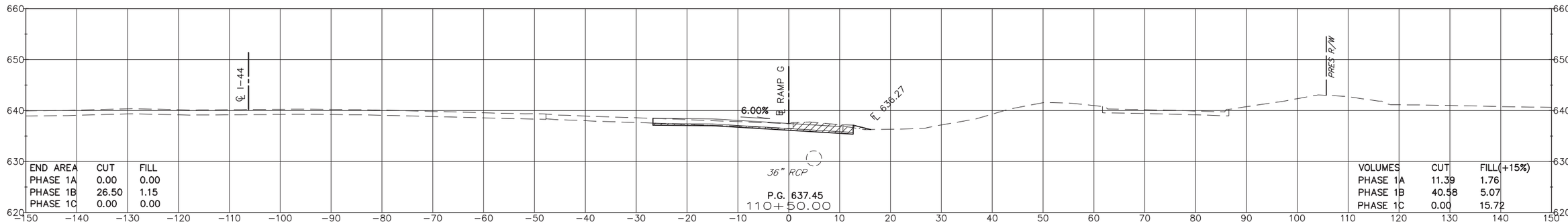

END AREA	CUT	FILL
PHASE 1A	0.00	0.00
PHASE 1B	26.50	1.15
PHASE 1C	0.00	0.00

VOLUMES	CUT	FILL(+15%)
PHASE 1A	11.39	1.76
PHASE 1B	40.58	5.07
PHASE 1C	0.00	15.72

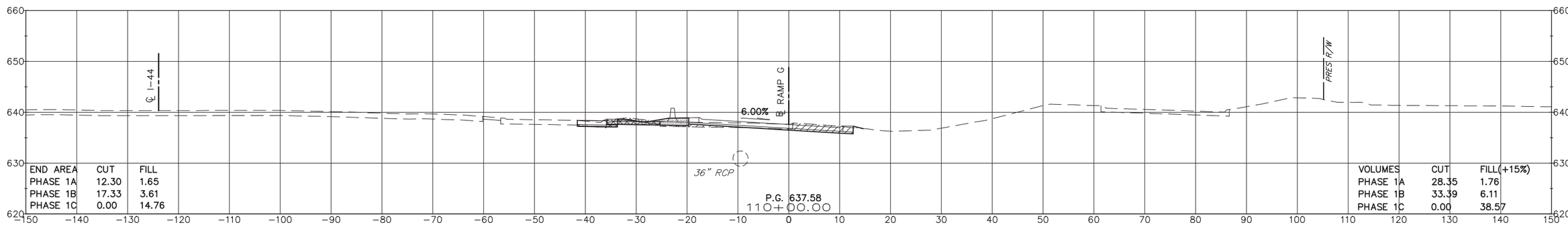

END AREA	CUT	FILL
PHASE 1A	12.30	1.65
PHASE 1B	17.33	3.61
PHASE 1C	0.00	14.76

VOLUMES	CUT	FILL(+15%)
PHASE 1A	28.35	1.76
PHASE 1B	33.39	6.11
PHASE 1C	0.00	38.57

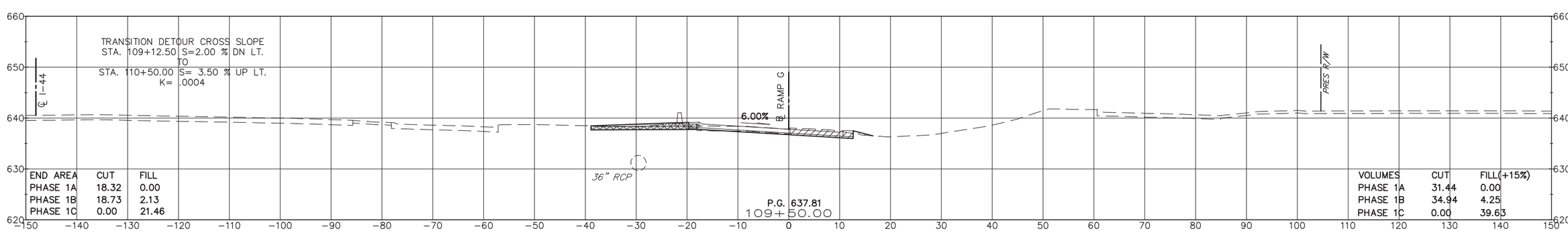

END AREA	CUT	FILL
PHASE 1A	18.32	0.00
PHASE 1B	18.73	2.13
PHASE 1C	0.00	21.46

VOLUMES	CUT	FILL(+15%)
PHASE 1A	31.44	0.00
PHASE 1B	34.94	4.25
PHASE 1C	0.00	39.63

PHASE 1A TEMP. WIDENING

PHASE 1B PERM. CONST.

PHASE 1C PERM. CONST. LT.

Survey	CKS	
Drawn	CKD	
Checked	CKE	
Approved		
Squad	C & K	

INTERCHANGE (OPERATIONAL IMPROVEMENTS) TULSA COUNTY

RAMP G

STA. 109+50.00 TO STA. 111+00.00

JOB PIECE NO. 10981(05) SHEET NO. X039

S:\Projects\ODOT\2015 EC-1710 I-44-169 Interchange\ACAD\PS&E\Plans\X032-X049-1098105-RAMP G.dwg, X039, 9/17/2021 3:16:27 PM

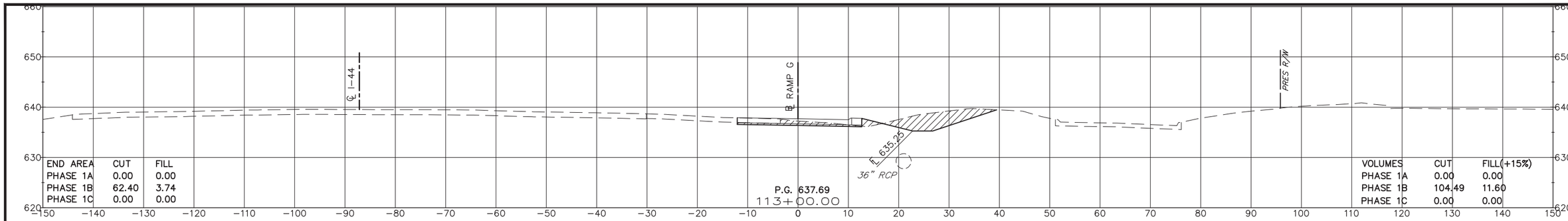

END AREA	CUT	FILL
PHASE 1A	0.00	0.00
PHASE 1B	62.40	3.74
PHASE 1C	0.00	0.00

VOLUMES	CUT	FILL(+15%)
PHASE 1A	0.00	0.00
PHASE 1B	104.49	11.60
PHASE 1C	0.00	0.00

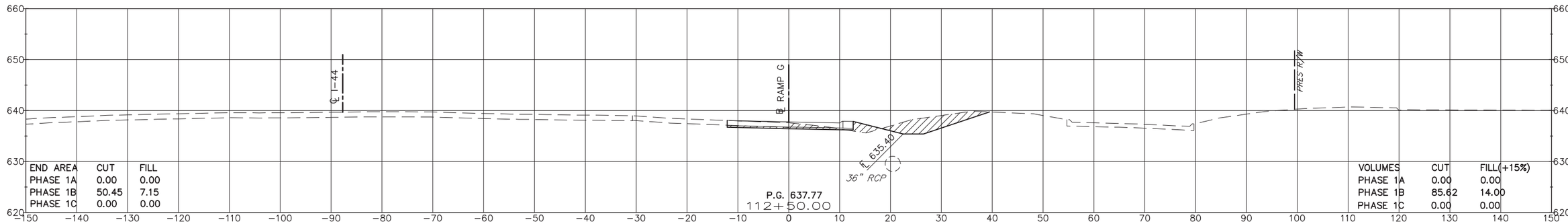

END AREA	CUT	FILL
PHASE 1A	0.00	0.00
PHASE 1B	50.45	7.15
PHASE 1C	0.00	0.00

VOLUMES	CUT	FILL(+15%)
PHASE 1A	0.00	0.00
PHASE 1B	85.62	14.00
PHASE 1C	0.00	0.00

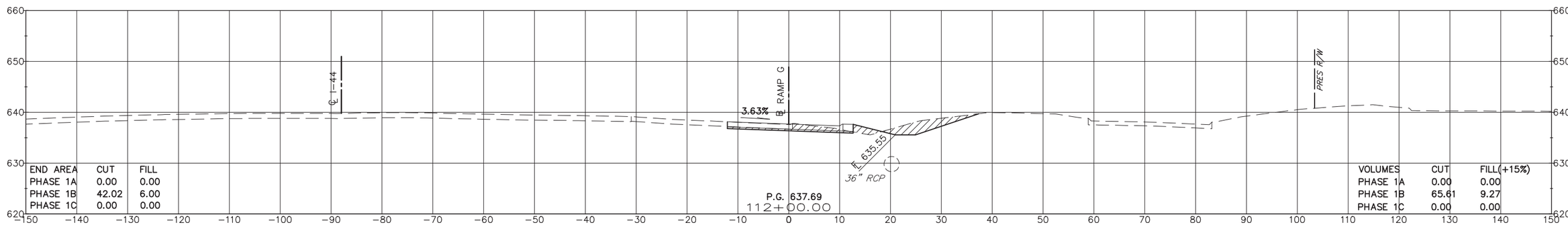

END AREA	CUT	FILL
PHASE 1A	0.00	0.00
PHASE 1B	42.02	6.00
PHASE 1C	0.00	0.00

VOLUMES	CUT	FILL(+15%)
PHASE 1A	0.00	0.00
PHASE 1B	65.61	9.27
PHASE 1C	0.00	0.00

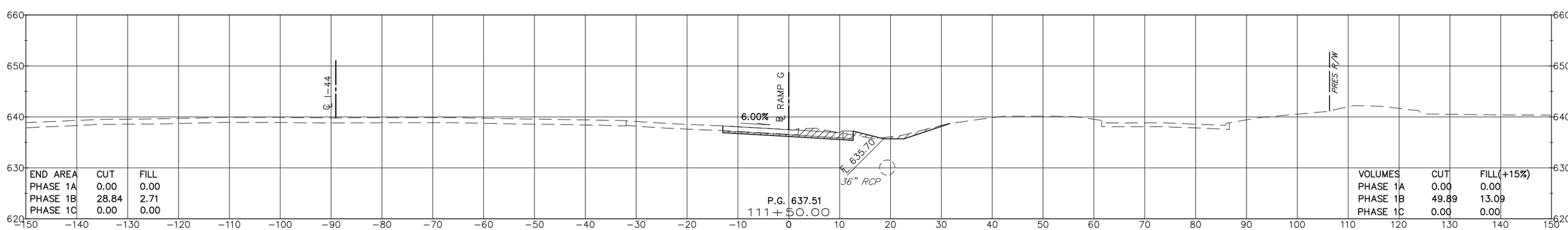

END AREA	CUT	FILL
PHASE 1A	0.00	0.00
PHASE 1B	28.84	2.71
PHASE 1C	0.00	0.00

VOLUMES	CUT	FILL(+15%)
PHASE 1A	0.00	0.00
PHASE 1B	49.89	13.09
PHASE 1C	0.00	0.00

PHASE 1A TEMP. WIDENING

PHASE 1B PERM. CONST.

PHASE 1C PERM. CONST. LT.

Survey	CKS	
Drawn	CKD	
Checked	CKE	
Approved		
Squad	C & K	

INTERCHANGE (OPERATIONAL IMPROVEMENTS) TULSA COUNTY

RAMP G

STA. 111+50.00 TO STA. 113+00.00

JOB PIECE NO. 10981(05) SHEET NO. X040

S:\Projects\ODOT\2015 EC-1710 I-44-169 Interchange\ACAD\PS&E\Plans\X032-X049-1098105-RAMP G.dwg, X040, 9/17/2021 3:16:32 PM

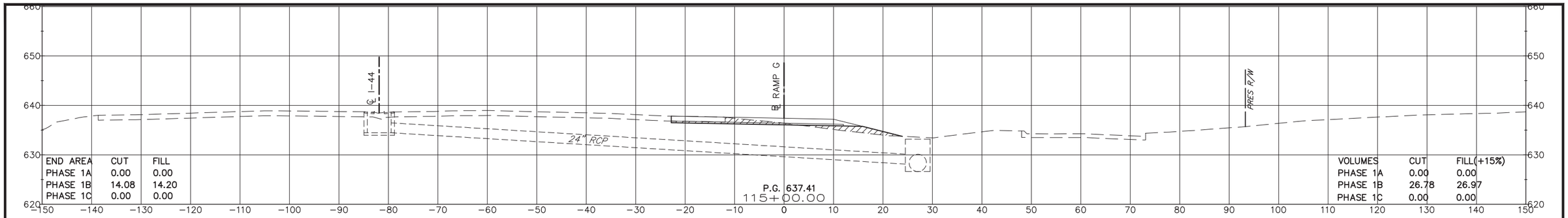

END AREA	CUT	FILL
PHASE 1A	0.00	0.00
PHASE 1B	14.08	14.20
PHASE 1C	0.00	0.00

VOLUMES	CUT	FILL(+15%)
PHASE 1A	0.00	0.00
PHASE 1B	26.78	26.97
PHASE 1C	0.00	0.00

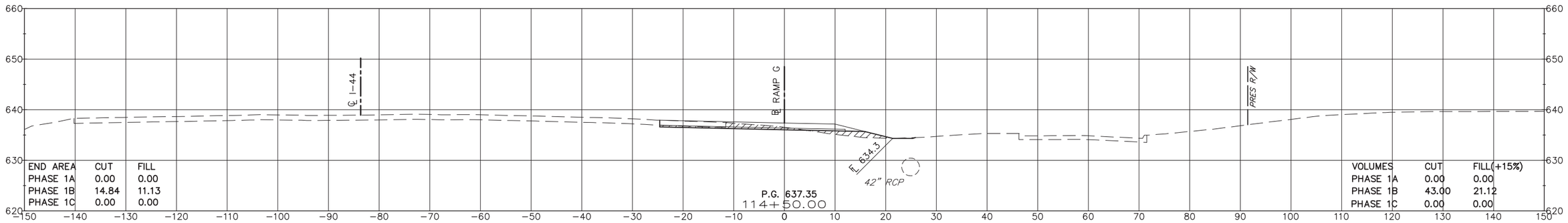

END AREA	CUT	FILL
PHASE 1A	0.00	0.00
PHASE 1B	14.84	11.13
PHASE 1C	0.00	0.00

VOLUMES	CUT	FILL(+15%)
PHASE 1A	0.00	0.00
PHASE 1B	43.00	21.12
PHASE 1C	0.00	0.00

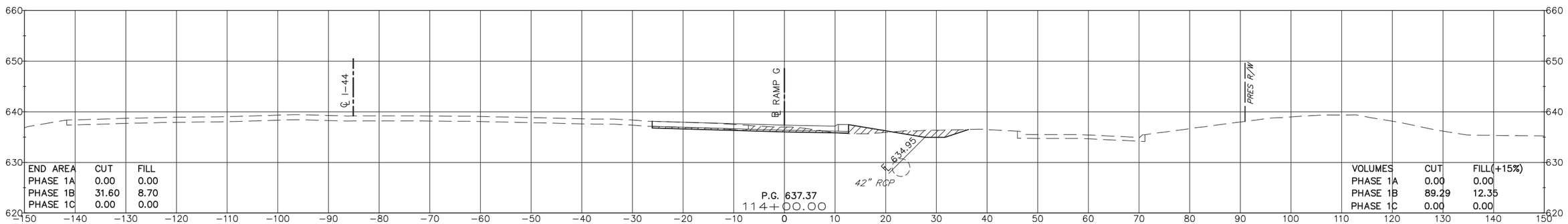

END AREA	CUT	FILL
PHASE 1A	0.00	0.00
PHASE 1B	31.60	8.70
PHASE 1C	0.00	0.00

VOLUMES	CUT	FILL(+15%)
PHASE 1A	0.00	0.00
PHASE 1B	89.29	12.35
PHASE 1C	0.00	0.00

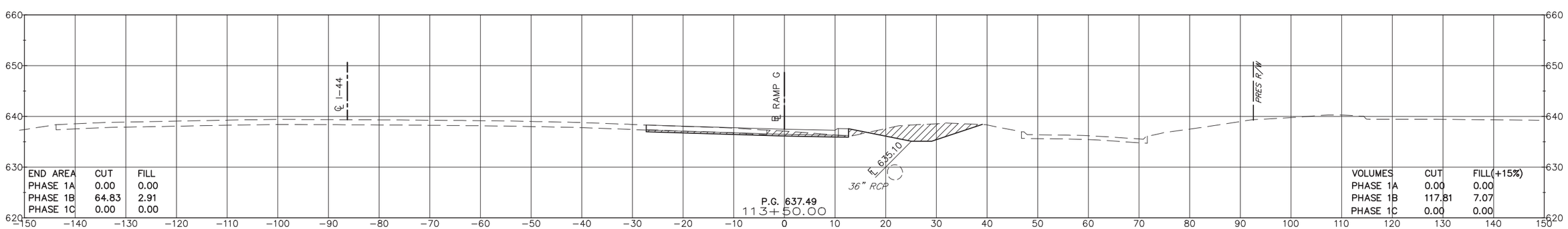

END AREA	CUT	FILL
PHASE 1A	0.00	0.00
PHASE 1B	64.83	2.91
PHASE 1C	0.00	0.00

VOLUMES	CUT	FILL(+15%)
PHASE 1A	0.00	0.00
PHASE 1B	117.81	7.07
PHASE 1C	0.00	0.00

PHASE 1A TEMP. WIDENING

PHASE 1B PERM. CONST.

PHASE 1C PERM. CONST. LT.

Survey	CKS	
Drawn	CKD	
Checked	CKE	
Approved		
Squad	C & K	

INTERCHANGE (OPERATIONAL IMPROVEMENTS) TULSA COUNTY

RAMP G

STA. 113+50.00 TO STA. 115+00.00

JOB PIECE NO. 10981(05) SHEET NO. X041

S:\Projects\ODOT\2015 EC-1710 I-44-169 Interchange\ACAD\PS&E\Plans\X032-X049-1098105-RAMP G.dwg, X041, 9/17/2021 3:16:37 PM

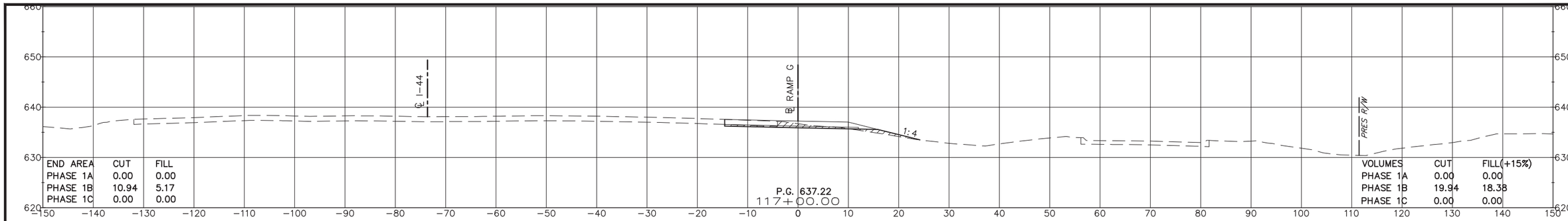

END AREA	CUT	FILL
PHASE 1A	0.00	0.00
PHASE 1B	10.94	5.17
PHASE 1C	0.00	0.00

VOLUMES	CUT	FILL(+15%)
PHASE 1A	0.00	0.00
PHASE 1B	19.94	18.38
PHASE 1C	0.00	0.00

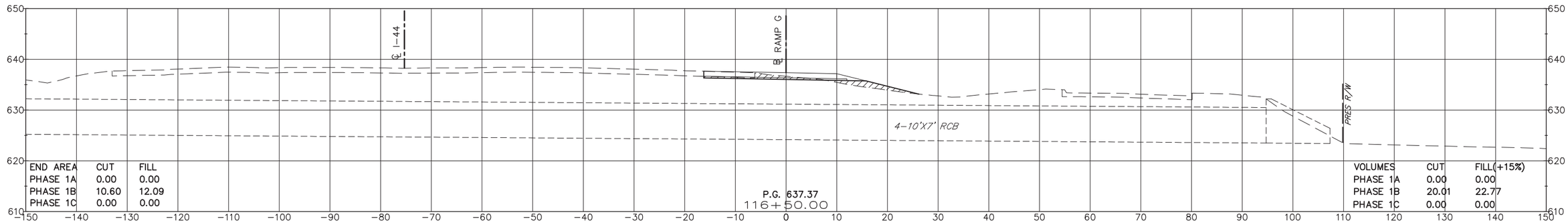

END AREA	CUT	FILL
PHASE 1A	0.00	0.00
PHASE 1B	10.60	12.09
PHASE 1C	0.00	0.00

VOLUMES	CUT	FILL(+15%)
PHASE 1A	0.00	0.00
PHASE 1B	20.01	22.77
PHASE 1C	0.00	0.00

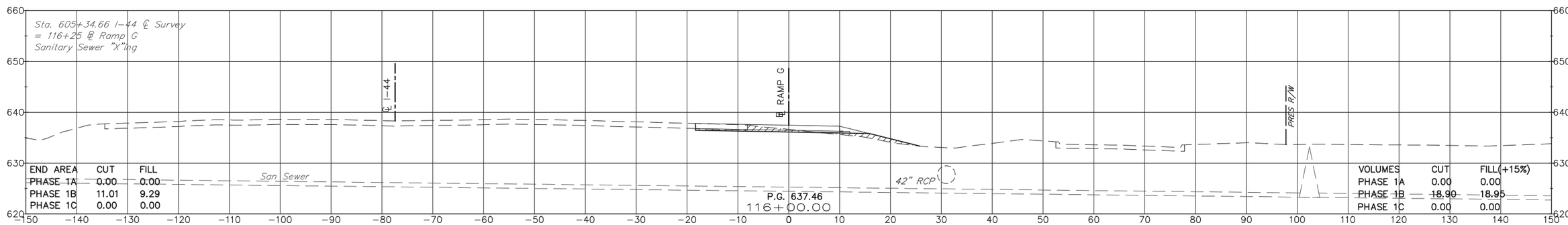

END AREA	CUT	FILL
PHASE 1A	0.00	0.00
PHASE 1B	11.01	9.29
PHASE 1C	0.00	0.00

VOLUMES	CUT	FILL(+15%)
PHASE 1A	0.00	0.00
PHASE 1B	18.90	18.95
PHASE 1C	0.00	0.00

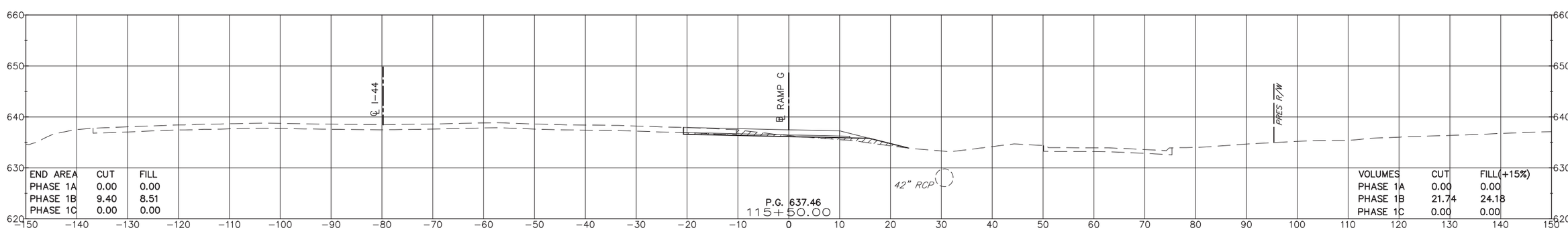

END AREA	CUT	FILL
PHASE 1A	0.00	0.00
PHASE 1B	9.40	8.51
PHASE 1C	0.00	0.00

VOLUMES	CUT	FILL(+15%)
PHASE 1A	0.00	0.00
PHASE 1B	21.74	24.18
PHASE 1C	0.00	0.00

PHASE 1A TEMP. WIDENING

PHASE 1B PERM. CONST.

PHASE 1C PERM. CONST. LT.

Survey	CKS	
Drawn	CKD	
Checked	CKE	
Approved		
Squad	C & K	

INTERCHANGE (OPERATIONAL IMPROVEMENTS) TULSA COUNTY

RAMP G

STA. 115+50.00 TO STA. 117+00.00

JOB PIECE NO. 10981(05) SHEET NO. X042

S:\Projects\ODOT\2015 EC-1710 I-44-169 Interchange\ACAD\PS&E\Plans\X032-X049-1098105-RAMP G.dwg, X042, 9/17/2021 3:16:42 PM

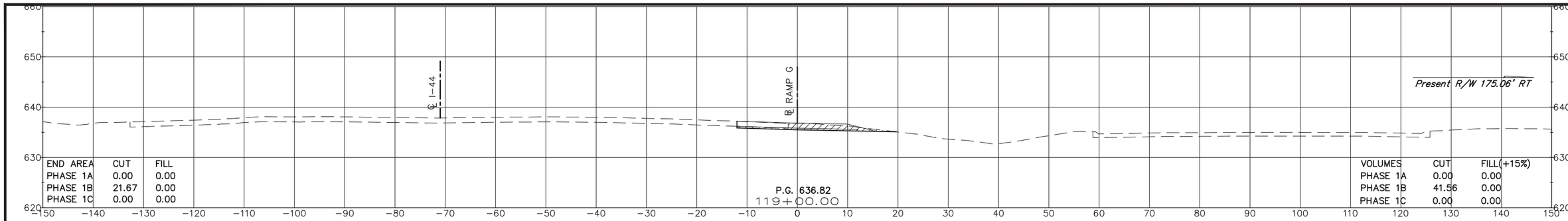

END AREA	CUT	FILL
PHASE 1A	0.00	0.00
PHASE 1B	21.67	0.00
PHASE 1C	0.00	0.00

VOLUMES	CUT	FILL(+15%)
PHASE 1A	0.00	0.00
PHASE 1B	41.56	0.00
PHASE 1C	0.00	0.00

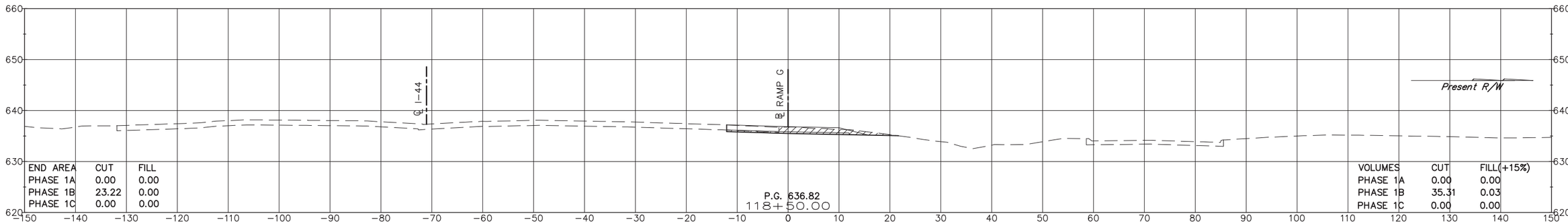

END AREA	CUT	FILL
PHASE 1A	0.00	0.00
PHASE 1B	23.22	0.00
PHASE 1C	0.00	0.00

VOLUMES	CUT	FILL(+15%)
PHASE 1A	0.00	0.00
PHASE 1B	35.31	0.03
PHASE 1C	0.00	0.00

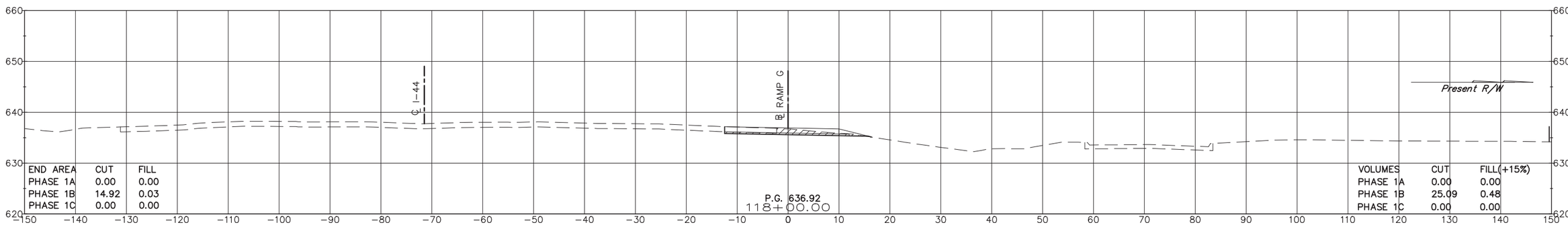

END AREA	CUT	FILL
PHASE 1A	0.00	0.00
PHASE 1B	14.92	0.03
PHASE 1C	0.00	0.00

VOLUMES	CUT	FILL(+15%)
PHASE 1A	0.00	0.00
PHASE 1B	25.09	0.48
PHASE 1C	0.00	0.00

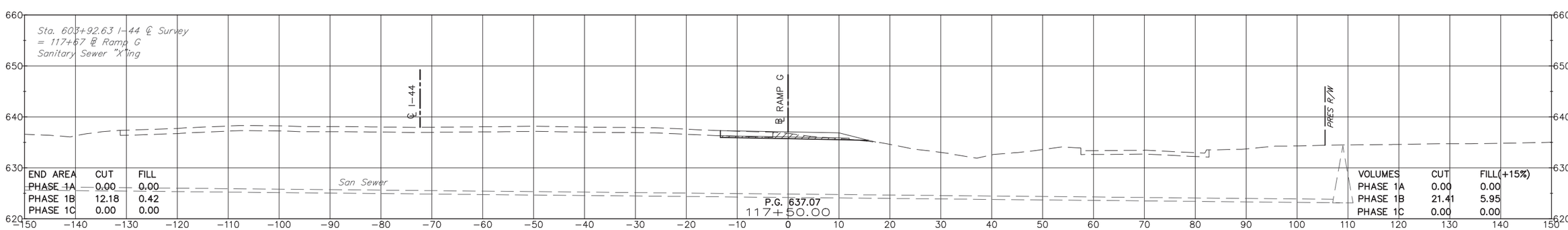

END AREA	CUT	FILL
PHASE 1A	0.00	0.00
PHASE 1B	12.18	0.42
PHASE 1C	0.00	0.00

VOLUMES	CUT	FILL(+15%)
PHASE 1A	0.00	0.00
PHASE 1B	21.41	5.95
PHASE 1C	0.00	0.00

PHASE 1A TEMP. WIDENING

PHASE 1B PERM. CONST.

PHASE 1C PERM. CONST. LT.

Survey	CKS	
Drawn	CKD	
Checked	CKE	
Approved		
Squad	C & K	

INTERCHANGE (OPERATIONAL IMPROVEMENTS) TULSA COUNTY

RAMP G

STA. 117+50.00 TO STA. 119+00.00

JOB PIECE NO. 10981(05) SHEET NO. X043

S:\Projects\ODOT\2015 EC-1710 I-44-169 Interchange\ACAD\PS&E\Plans\X032-X049-1098105-RAMP G.dwg, X043, 9/17/2021 3:16:47 PM

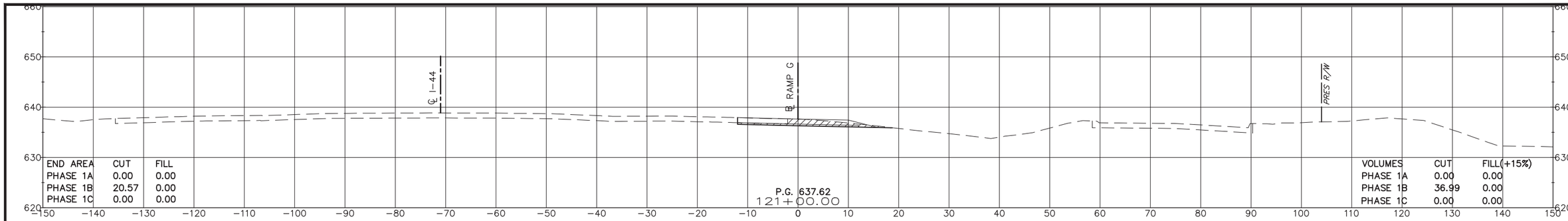

END AREA	CUT	FILL
PHASE 1A	0.00	0.00
PHASE 1B	20.57	0.00
PHASE 1C	0.00	0.00

VOLUMES	CUT	FILL(+15%)
PHASE 1A	0.00	0.00
PHASE 1B	36.99	0.00
PHASE 1C	0.00	0.00

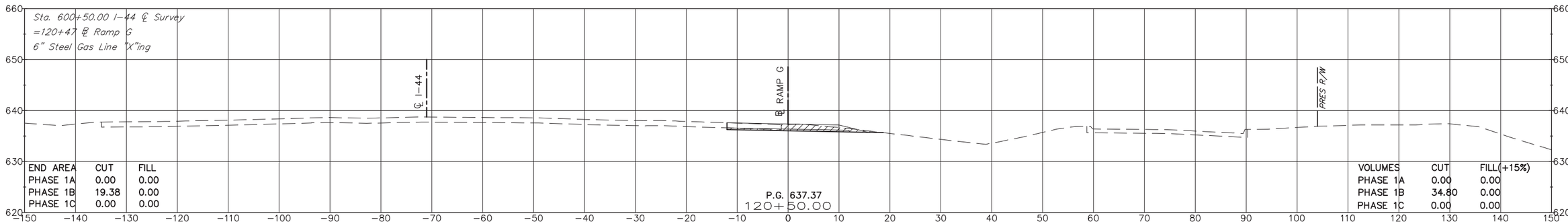

END AREA	CUT	FILL
PHASE 1A	0.00	0.00
PHASE 1B	19.38	0.00
PHASE 1C	0.00	0.00

VOLUMES	CUT	FILL(+15%)
PHASE 1A	0.00	0.00
PHASE 1B	34.80	0.00
PHASE 1C	0.00	0.00

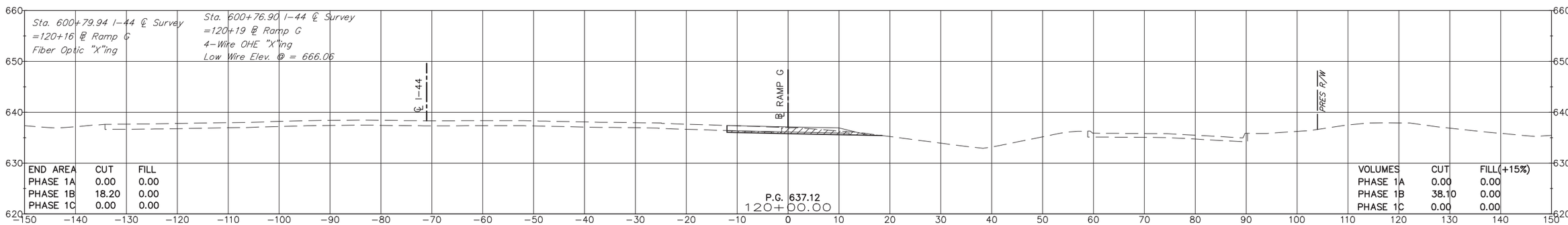

END AREA	CUT	FILL
PHASE 1A	0.00	0.00
PHASE 1B	18.20	0.00
PHASE 1C	0.00	0.00

VOLUMES	CUT	FILL(+15%)
PHASE 1A	0.00	0.00
PHASE 1B	38.10	0.00
PHASE 1C	0.00	0.00

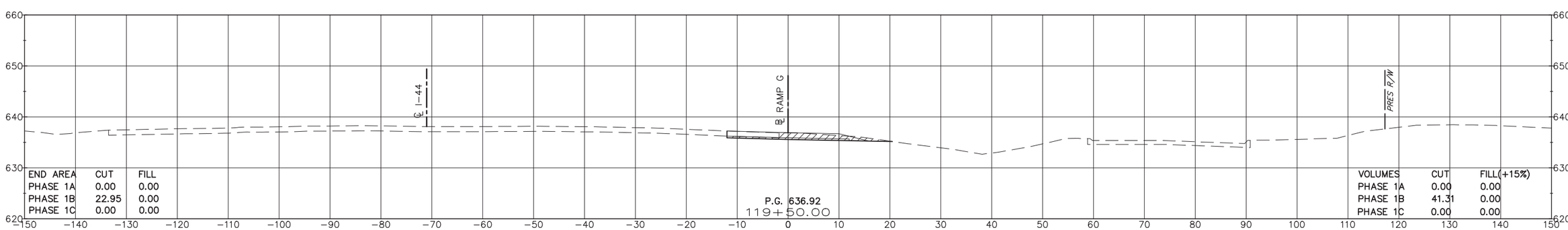

END AREA	CUT	FILL
PHASE 1A	0.00	0.00
PHASE 1B	22.95	0.00
PHASE 1C	0.00	0.00

VOLUMES	CUT	FILL(+15%)
PHASE 1A	0.00	0.00
PHASE 1B	41.31	0.00
PHASE 1C	0.00	0.00

PHASE 1A TEMP. WIDENING

PHASE 1B PERM. CONST.

PHASE 1C PERM. CONST. LT.

Survey	CKS	
Drawn	CKD	
Checked	CKE	
Approved		
Squad	C & K	

INTERCHANGE (OPERATIONAL IMPROVEMENTS) TULSA COUNTY

RAMP G

STA. 119+50.00 TO STA. 121+00.00

JOB PIECE NO. 10981(05) SHEET NO. X044

S:\Projects\ODOT\2015 EC-1710 I-44-169 Interchange\ACAD\PS&E\Plans\X032-X049-1098105-RAMP G.dwg, X044, 9/17/2021 3:16:52 PM

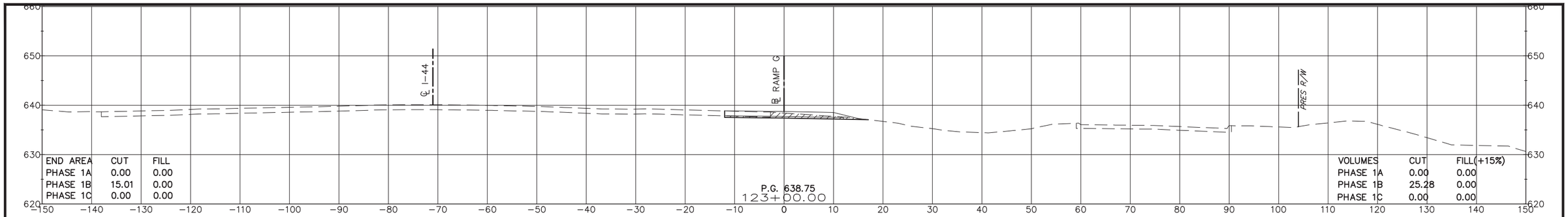

END AREA	CUT	FILL
PHASE 1A	0.00	0.00
PHASE 1B	15.01	0.00
PHASE 1C	0.00	0.00

VOLUMES	CUT	FILL(+15%)
PHASE 1A	0.00	0.00
PHASE 1B	25.28	0.00
PHASE 1C	0.00	0.00

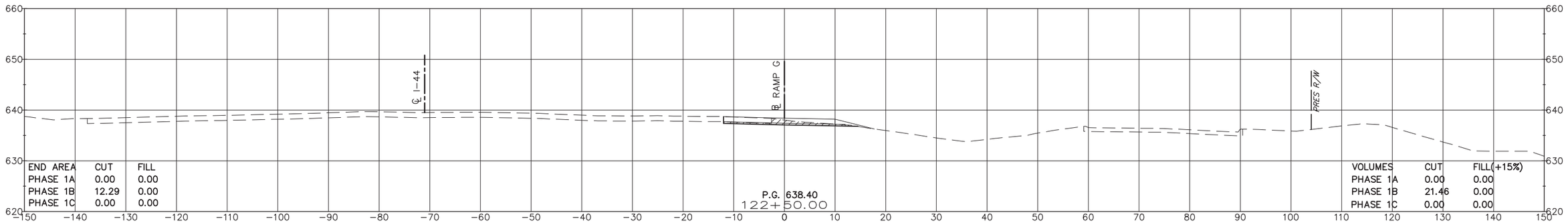

END AREA	CUT	FILL
PHASE 1A	0.00	0.00
PHASE 1B	12.29	0.00
PHASE 1C	0.00	0.00

VOLUMES	CUT	FILL(+15%)
PHASE 1A	0.00	0.00
PHASE 1B	21.46	0.00
PHASE 1C	0.00	0.00

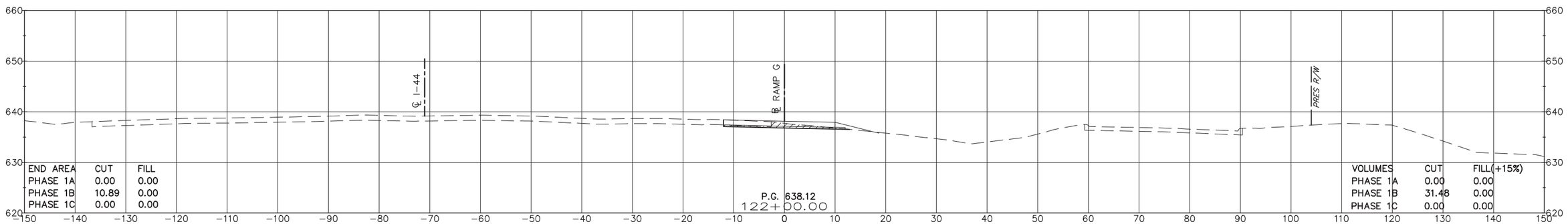

END AREA	CUT	FILL
PHASE 1A	0.00	0.00
PHASE 1B	10.89	0.00
PHASE 1C	0.00	0.00

VOLUMES	CUT	FILL(+15%)
PHASE 1A	0.00	0.00
PHASE 1B	31.48	0.00
PHASE 1C	0.00	0.00

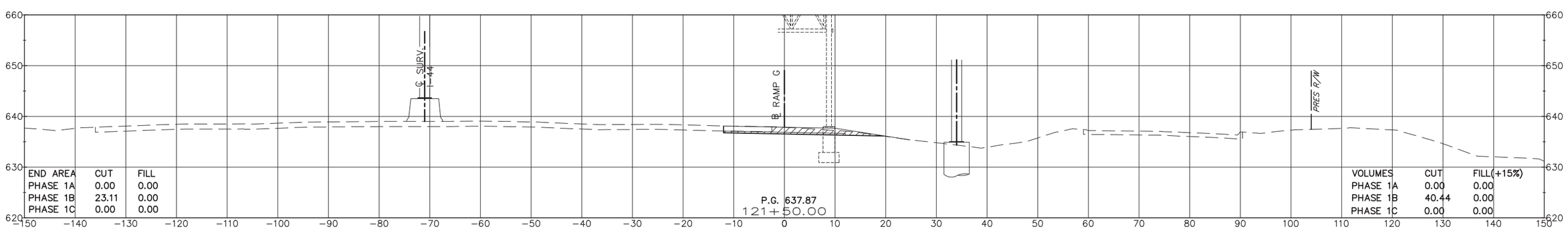

END AREA	CUT	FILL
PHASE 1A	0.00	0.00
PHASE 1B	23.11	0.00
PHASE 1C	0.00	0.00

VOLUMES	CUT	FILL(+15%)
PHASE 1A	0.00	0.00
PHASE 1B	40.44	0.00
PHASE 1C	0.00	0.00

PHASE 1A TEMP. WIDENING

PHASE 1B PERM. CONST.

PHASE 1C PERM. CONST. LT.

Survey	CKS	
Drawn	CKD	
Checked	CKE	
Approved		
Squad	C & K	

INTERCHANGE (OPERATIONAL IMPROVEMENTS) TULSA COUNTY

RAMP G

STA. 121+50.00 TO STA. 123+00.00

JOB PIECE NO. 10981(05) SHEET NO. X045

S:\Projects\ODOT\2015 EC-1710 I-44-169 Interchange\ACAD\PS&E\Plans\X032-X049-1098105-RAMP G.dwg, X045, 9/17/2021 3:16:57 PM

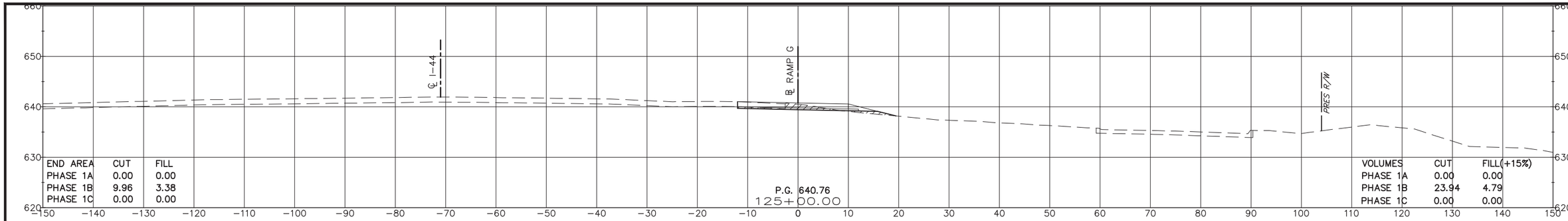

END AREA	CUT	FILL
PHASE 1A	0.00	0.00
PHASE 1B	9.96	3.38
PHASE 1C	0.00	0.00

VOLUMES	CUT	FILL(+15%)
PHASE 1A	0.00	0.00
PHASE 1B	23.94	4.79
PHASE 1C	0.00	0.00

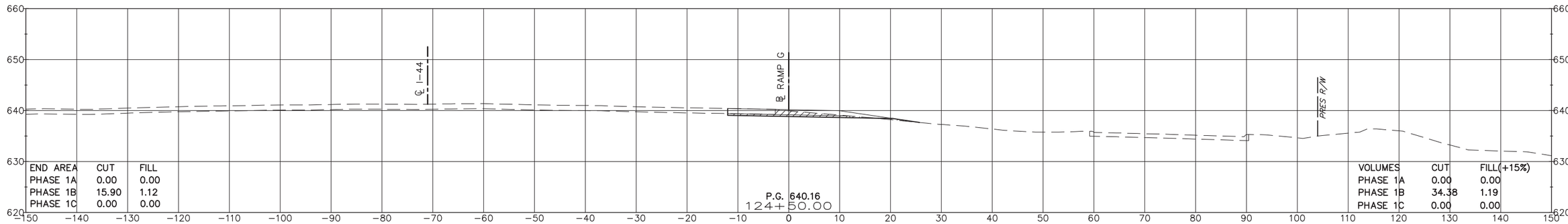

END AREA	CUT	FILL
PHASE 1A	0.00	0.00
PHASE 1B	15.90	1.12
PHASE 1C	0.00	0.00

VOLUMES	CUT	FILL(+15%)
PHASE 1A	0.00	0.00
PHASE 1B	34.38	1.19
PHASE 1C	0.00	0.00

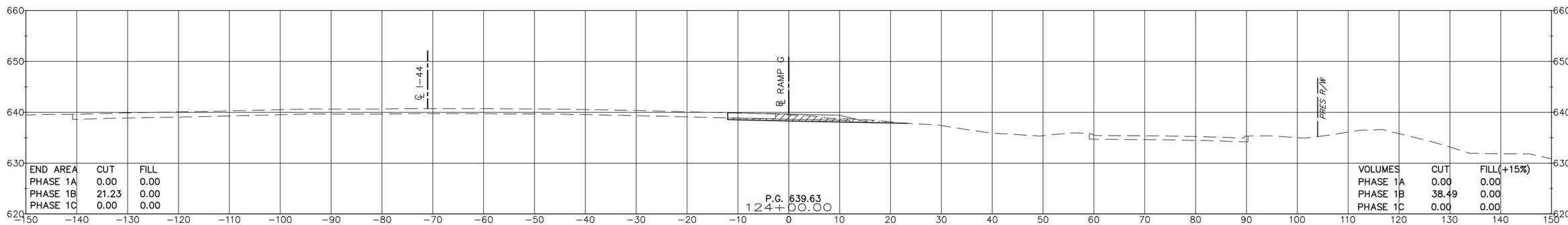

END AREA	CUT	FILL
PHASE 1A	0.00	0.00
PHASE 1B	21.23	0.00
PHASE 1C	0.00	0.00

VOLUMES	CUT	FILL(+15%)
PHASE 1A	0.00	0.00
PHASE 1B	38.49	0.00
PHASE 1C	0.00	0.00

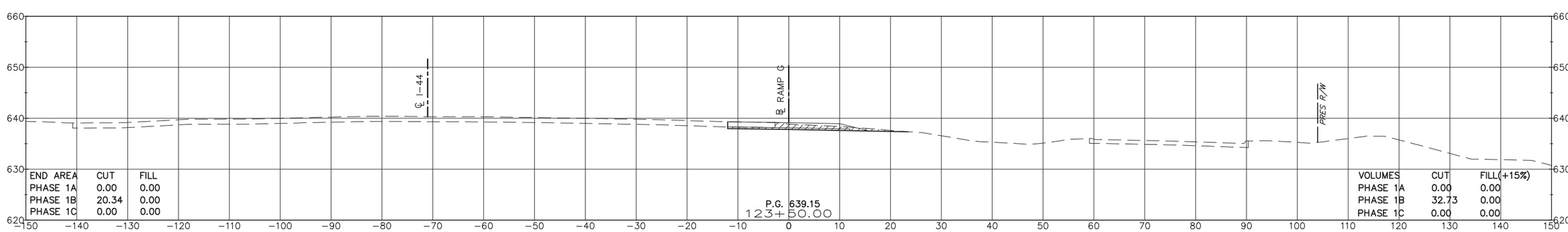

END AREA	CUT	FILL
PHASE 1A	0.00	0.00
PHASE 1B	20.34	0.00
PHASE 1C	0.00	0.00

VOLUMES	CUT	FILL(+15%)
PHASE 1A	0.00	0.00
PHASE 1B	32.73	0.00
PHASE 1C	0.00	0.00

PHASE 1A TEMP. WIDENING

PHASE 1B PERM. CONST.

PHASE 1C PERM. CONST. LT.

Survey	CKS	
Drawn	CKD	
Checked	CKE	
Approved		
Squad	C & K	

INTERCHANGE (OPERATIONAL IMPROVEMENTS) TULSA COUNTY

RAMP G

STA. 123+50.00 TO STA. 125+00.00

JOB PIECE NO. 10981(05) SHEET NO. X046

S:\Projects\ODOT\2015 EC-1710 I-44-169 Interchange\ACAD\PS&E\Plans\X032-X049-1098105-RAMP G.dwg, X046, 9/17/2021 3:17:02 PM

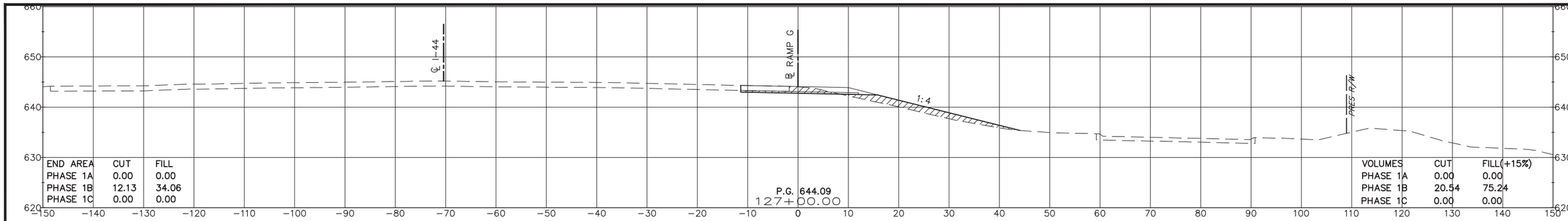

END AREA	CUT	FILL
PHASE 1A	0.00	0.00
PHASE 1B	12.13	34.06
PHASE 1C	0.00	0.00

VOLUMES	CUT	FILL(+15%)
PHASE 1A	0.00	0.00
PHASE 1B	20.54	75.24
PHASE 1C	0.00	0.00

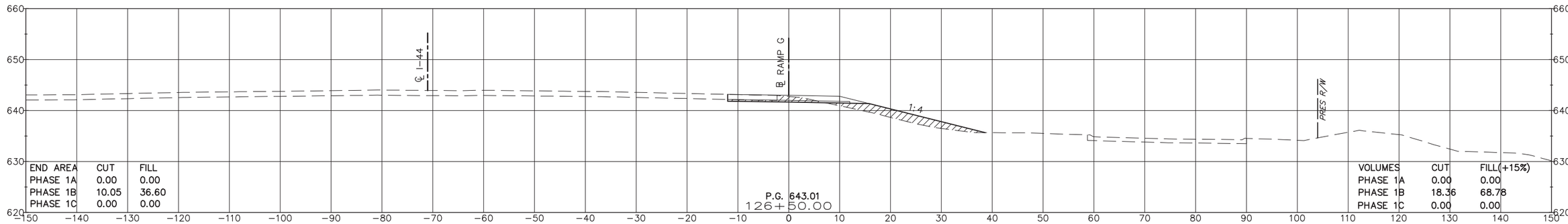

END AREA	CUT	FILL
PHASE 1A	0.00	0.00
PHASE 1B	10.05	36.60
PHASE 1C	0.00	0.00

VOLUMES	CUT	FILL(+15%)
PHASE 1A	0.00	0.00
PHASE 1B	18.36	68.78
PHASE 1C	0.00	0.00

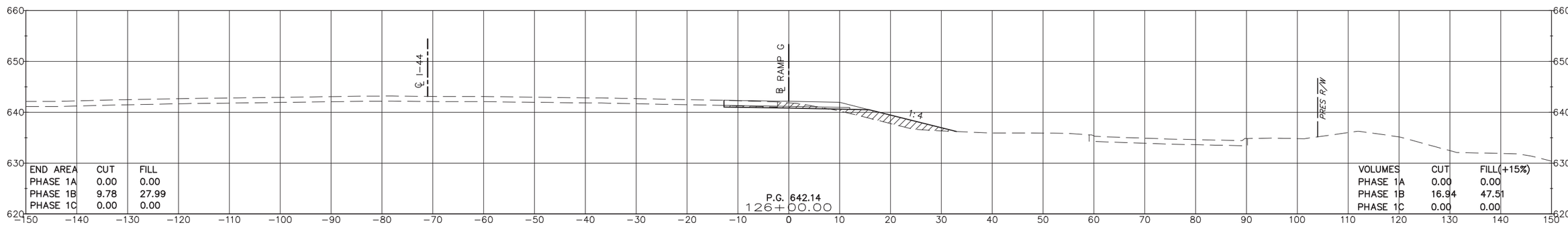

END AREA	CUT	FILL
PHASE 1A	0.00	0.00
PHASE 1B	9.78	27.99
PHASE 1C	0.00	0.00

VOLUMES	CUT	FILL(+15%)
PHASE 1A	0.00	0.00
PHASE 1B	16.94	47.51
PHASE 1C	0.00	0.00

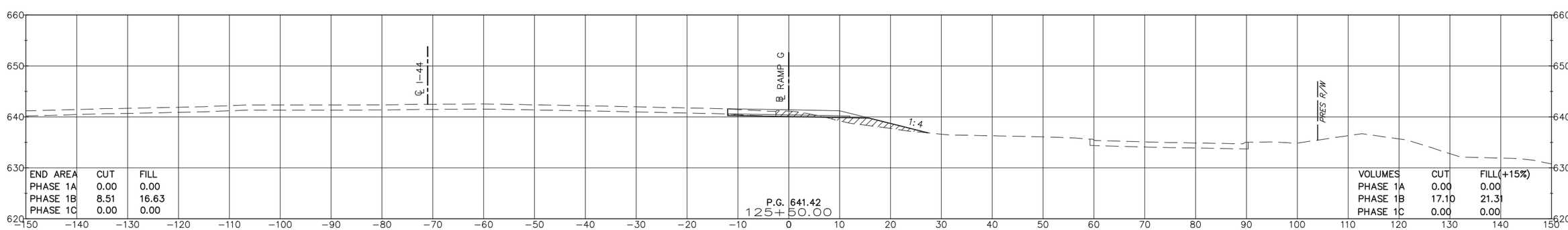

END AREA	CUT	FILL
PHASE 1A	0.00	0.00
PHASE 1B	8.51	16.63
PHASE 1C	0.00	0.00

VOLUMES	CUT	FILL(+15%)
PHASE 1A	0.00	0.00
PHASE 1B	17.10	21.31
PHASE 1C	0.00	0.00

PHASE 1A TEMP. WIDENING

PHASE 1B PERM. CONST.

PHASE 1C PERM. CONST. LT.

Survey	CKS	
Drawn	CKD	
Checked	CKE	
Approved		
Squad	C & K	

INTERCHANGE (OPERATIONAL IMPROVEMENTS) TULSA COUNTY

RAMP G

STA. 125+50.00 TO STA. 127+00.00

JOB PIECE NO. 10981(05) SHEET NO. X047

S:\Projects\ODOT\2015 EC-1710 I-44-169 Interchange\ACAD\PS&E\Plans\X032-X049-1098105-RAMP G.dwg, X047, 9/17/2021 3:17:07 PM

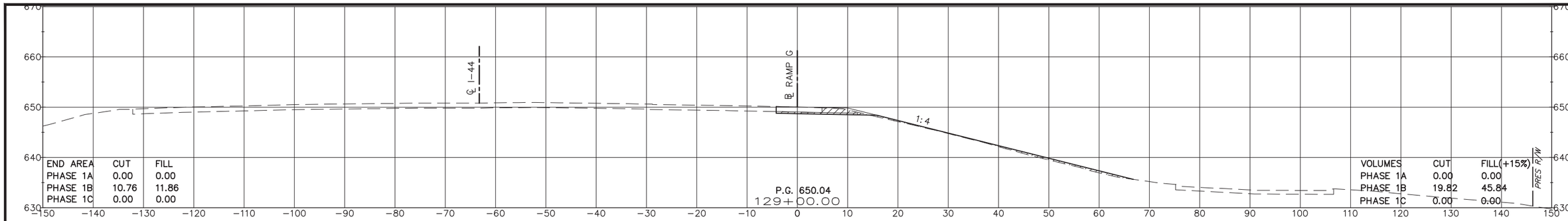

END AREA	CUT	FILL
PHASE 1A	0.00	0.00
PHASE 1B	10.76	11.86
PHASE 1C	0.00	0.00

VOLUMES	CUT	FILL(+15%)
PHASE 1A	0.00	0.00
PHASE 1B	19.82	45.84
PHASE 1C	0.00	0.00

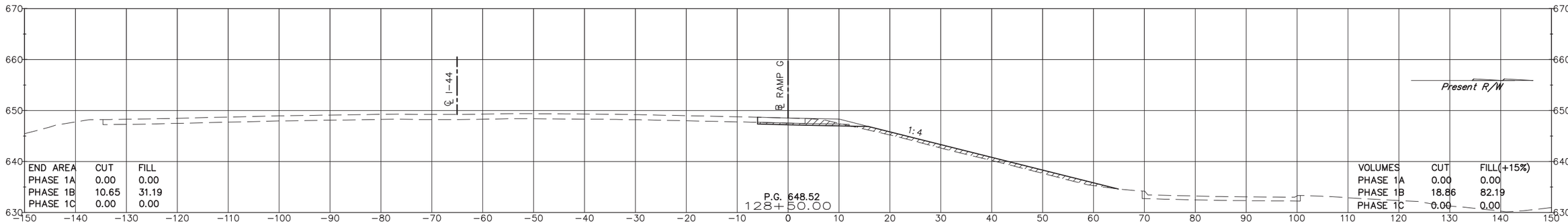

END AREA	CUT	FILL
PHASE 1A	0.00	0.00
PHASE 1B	10.65	31.19
PHASE 1C	0.00	0.00

VOLUMES	CUT	FILL(+15%)
PHASE 1A	0.00	0.00
PHASE 1B	18.86	82.19
PHASE 1C	0.00	0.00

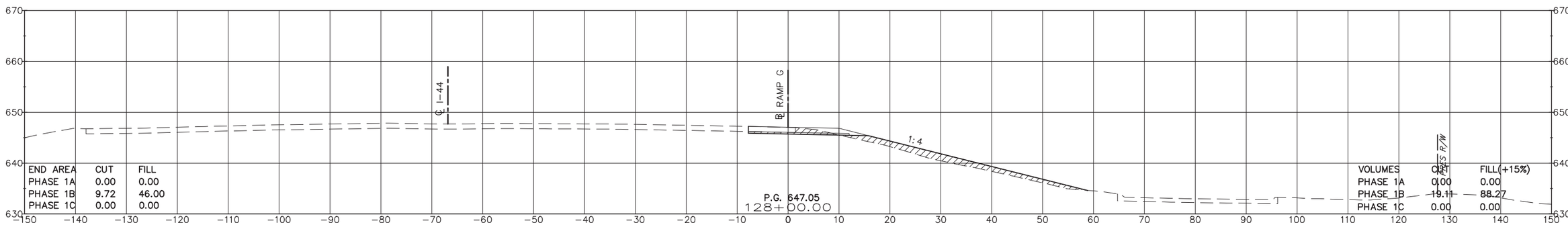

END AREA	CUT	FILL
PHASE 1A	0.00	0.00
PHASE 1B	9.72	46.00
PHASE 1C	0.00	0.00

VOLUMES	CUT	FILL(+15%)
PHASE 1A	0.00	0.00
PHASE 1B	19.11	88.27
PHASE 1C	0.00	0.00

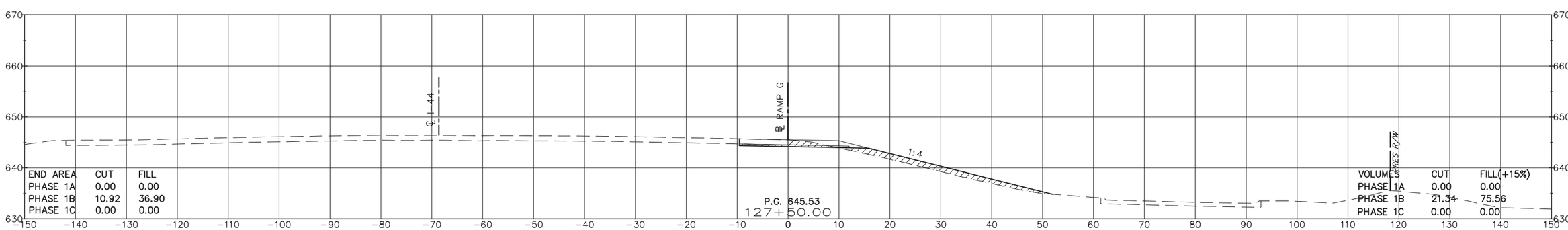

END AREA	CUT	FILL
PHASE 1A	0.00	0.00
PHASE 1B	10.92	36.90
PHASE 1C	0.00	0.00

VOLUMES	CUT	FILL(+15%)
PHASE 1A	0.00	0.00
PHASE 1B	21.34	75.56
PHASE 1C	0.00	0.00

PHASE 1A TEMP. WIDENING

PHASE 1B PERM. CONST.

PHASE 1C PERM. CONST. LT.

Survey	CKS	
Drawn	CKD	
Checked	CKE	
Approved		
Squad	C & K	

INTERCHANGE (OPERATIONAL IMPROVEMENTS) TULSA COUNTY

RAMP G

STA. 127+50.00 TO STA. 129+00.00

JOB PIECE NO. 10981(05) SHEET NO. X048

S:\Projects\ODOT\2015 EC-1710 I-44-169 Interchange\ACAD\PS&E\Plans\X032-X049-1098105-RAMP G.dwg, X048, 9/17/2021 3:17:12 PM

END INCIDENTAL CONSTRUCTION STA 132+00.00

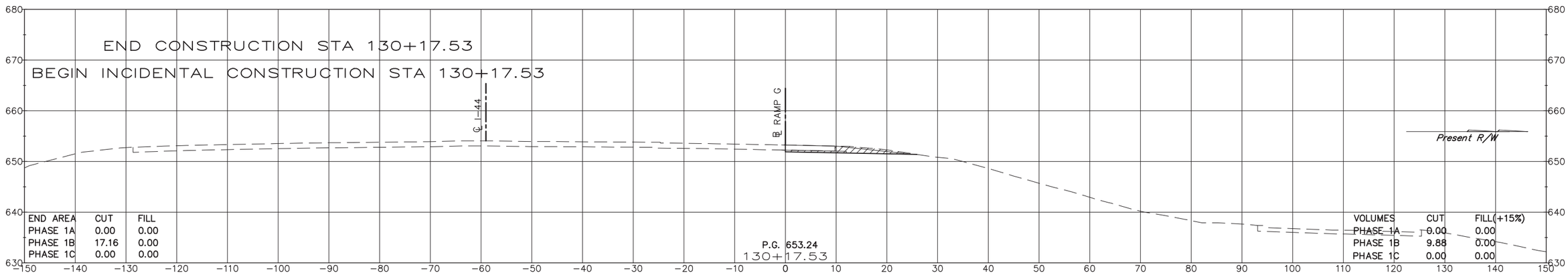

END AREA	CUT	FILL
PHASE 1A	0.00	0.00
PHASE 1B	17.16	0.00
PHASE 1C	0.00	0.00

VOLUMES	CUT	FILL(+15%)
PHASE 1A	0.00	0.00
PHASE 1B	9.88	0.00
PHASE 1C	0.00	0.00

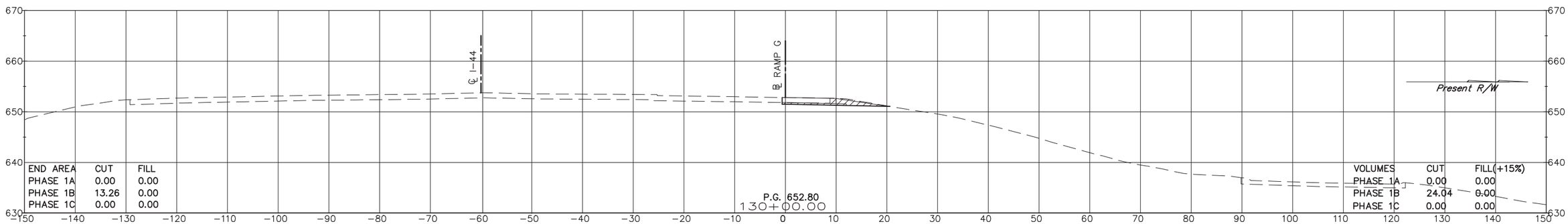

END AREA	CUT	FILL
PHASE 1A	0.00	0.00
PHASE 1B	13.26	0.00
PHASE 1C	0.00	0.00

VOLUMES	CUT	FILL(+15%)
PHASE 1A	0.00	0.00
PHASE 1B	24.04	0.00
PHASE 1C	0.00	0.00

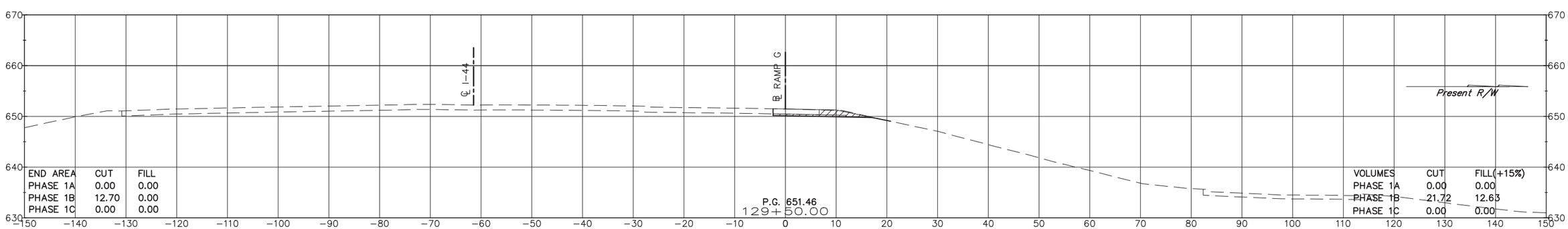

END AREA	CUT	FILL
PHASE 1A	0.00	0.00
PHASE 1B	12.70	0.00
PHASE 1C	0.00	0.00

VOLUMES	CUT	FILL(+15%)
PHASE 1A	0.00	0.00
PHASE 1B	21.72	12.63
PHASE 1C	0.00	0.00

PHASE 1A TEMP. WIDENING

PHASE 1B PERM. CONST.

PHASE 1C PERM. CONST. LT.

Survey	CKS	
Drawn	CKD	
Checked	CKE	
Approved		
Squad	C & K	

INTERCHANGE (OPERATIONAL IMPROVEMENTS) TULSA COUNTY

RAMP G

STA. 129+50.00 TO STA. 130+17.53

JOB PIECE NO. 10981(05) SHEET NO. X049

S:\Projects\ODOT\2015 EC-1710 I-44-169 Interchange\ACAD\PS&E\Plans\X032-X049-1098105-RAMP G.dwg, X049, 9/17/2021 3:17:17 PM

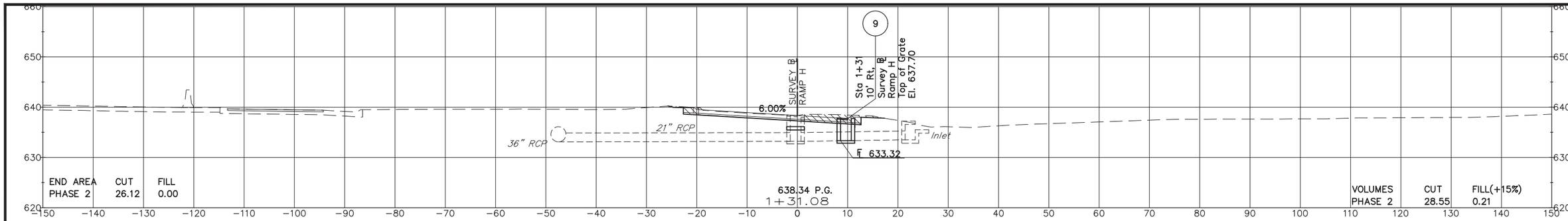

END AREA PHASE 2 | CUT 26.12 | FILL 0.00

VOLUMES PHASE 2 | CUT 28.55 | FILL(+15%) 0.21

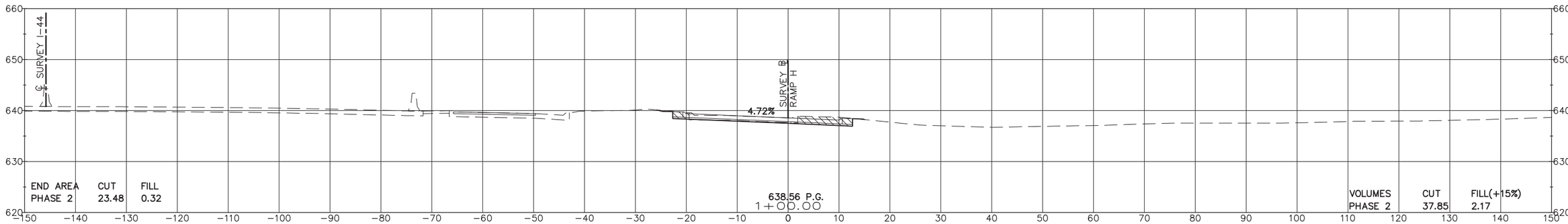

END AREA PHASE 2 | CUT 23.48 | FILL 0.32

VOLUMES PHASE 2 | CUT 37.85 | FILL(+15%) 2.17

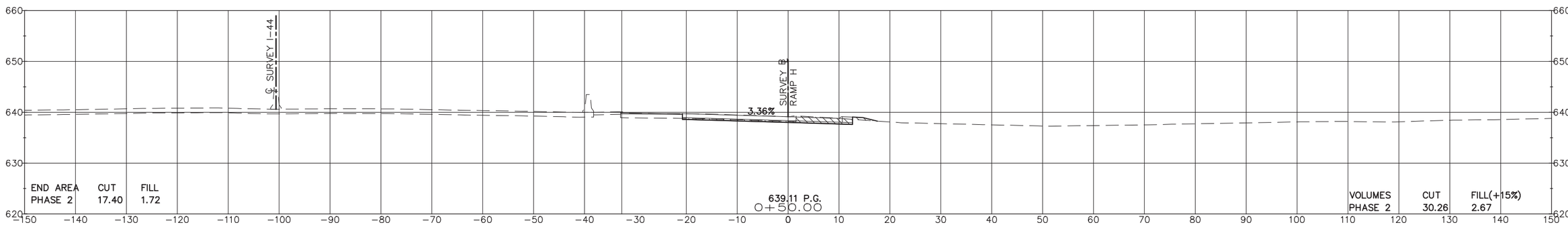

END AREA PHASE 2 | CUT 17.40 | FILL 1.72

VOLUMES PHASE 2 | CUT 30.26 | FILL(+15%) 2.67

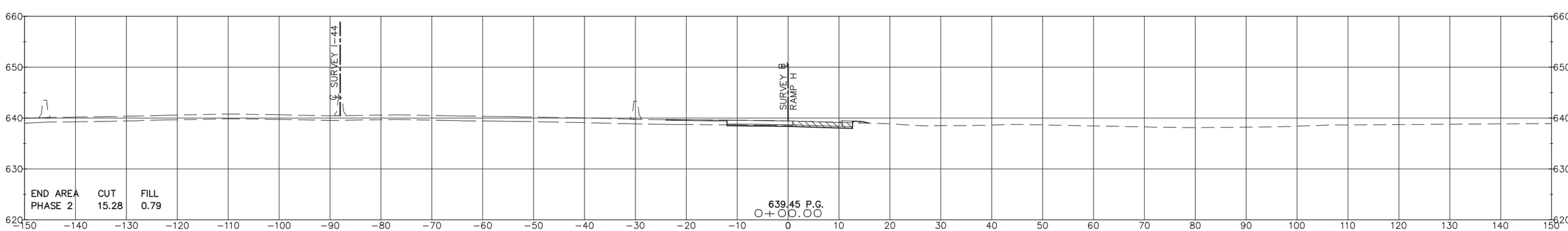

END AREA PHASE 2 | CUT 15.28 | FILL 0.79

BEGIN CONSTRUCTION STA 0+00.00 ℄ RAMP 'H'

PHASE 2

Survey	CKS	
Drawn	CKD	
Checked	CKE	
Approved		
Squad	C & K	

INTERCHANGE (OPERATIONAL IMPROVEMENTS) TULSA COUNTY

RAMP H

STA. 0+00.00 TO STA. 1+31.08

JOB PIECE NO. 10981(05) SHEET NO. X050

S:\Projects\ODOT\2015 EC-1710 I-44-169 Interchange\ACAD\PS&E\Plans\X050-X054-1098105-RAMP H.dwg, X050, 9/17/2021 3:17:23 PM

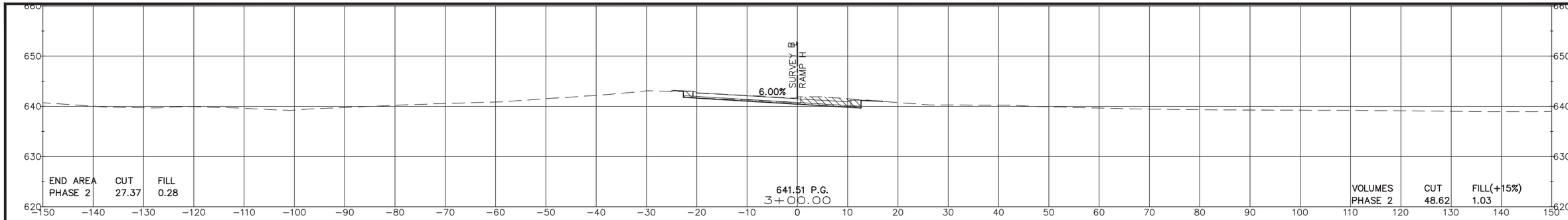

END AREA CUT FILL
PHASE 2 27.37 0.28

VOLUMES CUT FILL(+15%)
PHASE 2 48.62 1.03

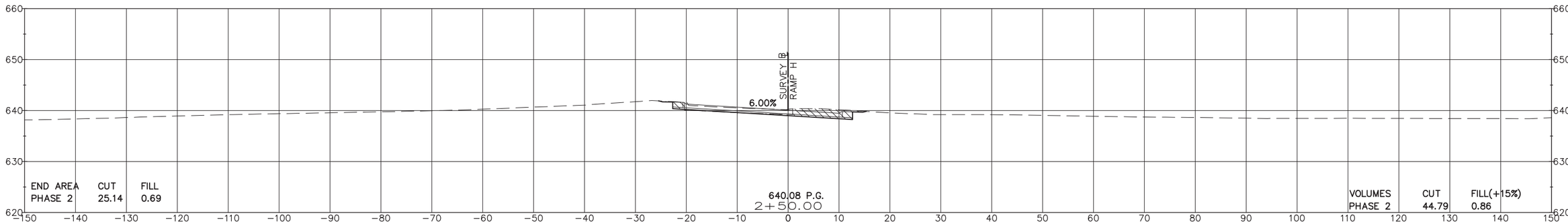

END AREA CUT FILL
PHASE 2 25.14 0.69

VOLUMES CUT FILL(+15%)
PHASE 2 44.79 0.86

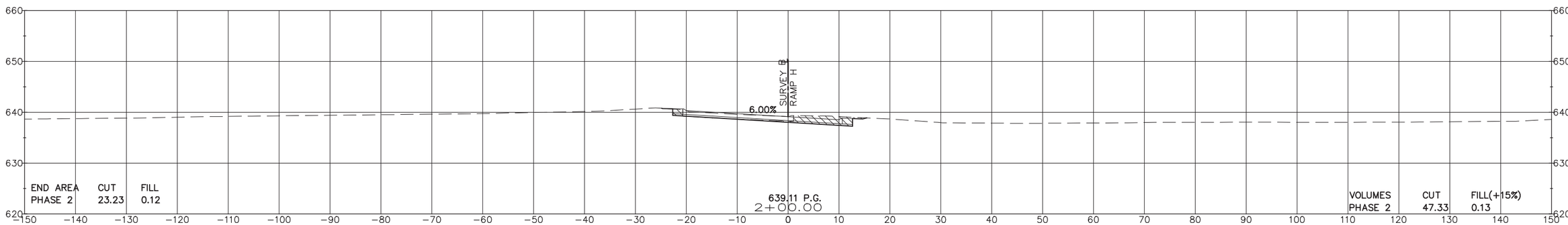

END AREA CUT FILL
PHASE 2 23.23 0.12

VOLUMES CUT FILL(+15%)
PHASE 2 47.33 0.13

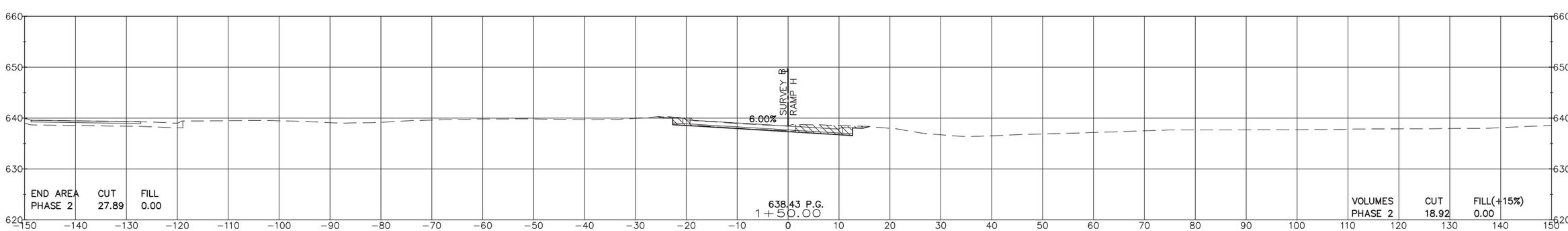

END AREA CUT FILL
PHASE 2 27.89 0.00

VOLUMES CUT FILL(+15%)
PHASE 2 18.92 0.00

PHASE 2

Survey	CKS	
Drawn	CKD	
Checked	CKE	
Approved		
Squad	C & K	

INTERCHANGE (OPERATIONAL IMPROVEMENTS) TULSA COUNTY

RAMP H

STA. 1+50.00 TO STA. 3+00.00

JOB PIECE NO. 10981(05) SHEET NO. X051

S:\Projects\ODOT\2015 EC-1710 I-44-169 Interchange\ACAD\PS&E\Plans\X050-X054-1098105-RAMP H.dwg, X051, 9/17/2021 3:17:27 PM

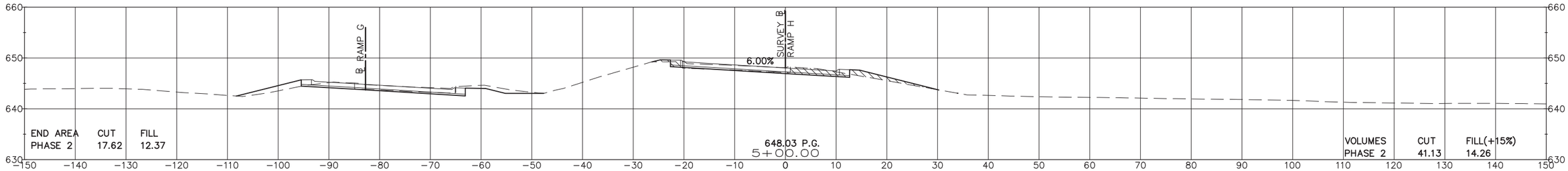

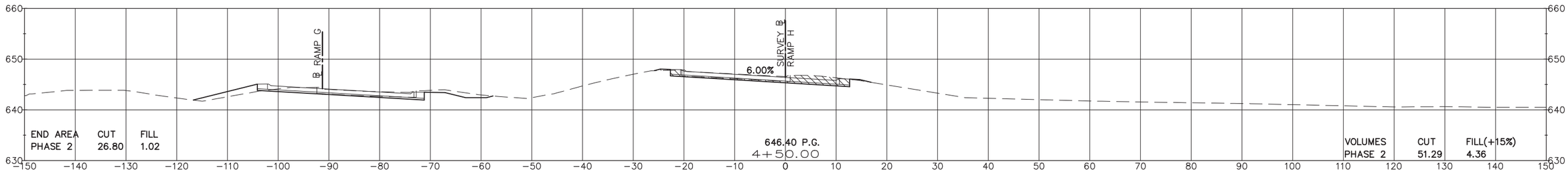

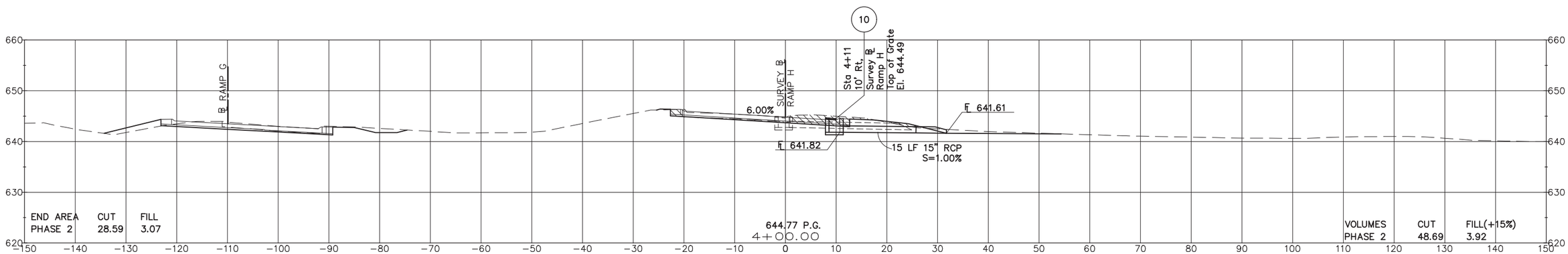

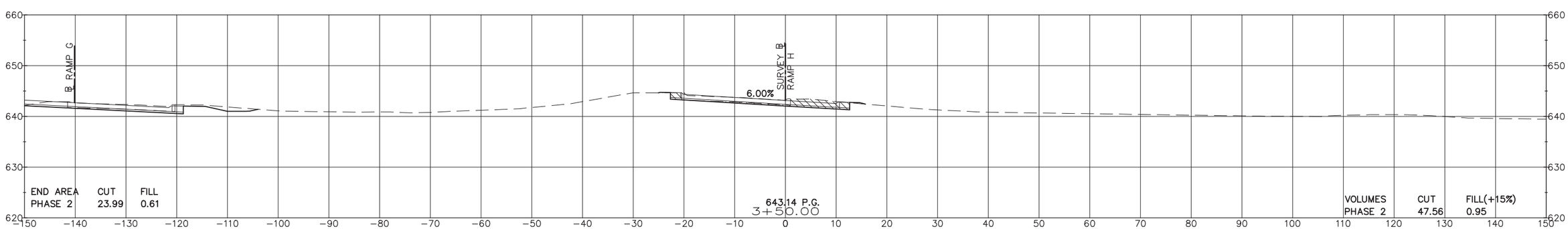

PHASE 2

Survey	CKS	
Drawn	CKD	
Checked	CKE	
Approved		
Squad	C & K	

INTERCHANGE (OPERATIONAL IMPROVEMENTS) TULSA COUNTY

RAMP H

STA. 3+50.00 TO STA. 5+00.00

JOB PIECE NO. 10981(05) SHEET NO. X052

S:\Projects\ODOT\2015 EC-1710 I-44-169 Interchange\ACAD\PS&E\Plans\X050-X054-1098105-RAMP H.dwg, X052, 9/17/2021 3:17:32 PM

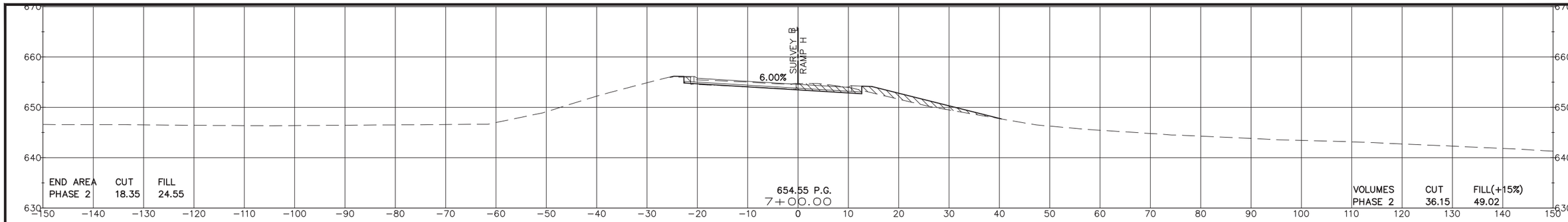

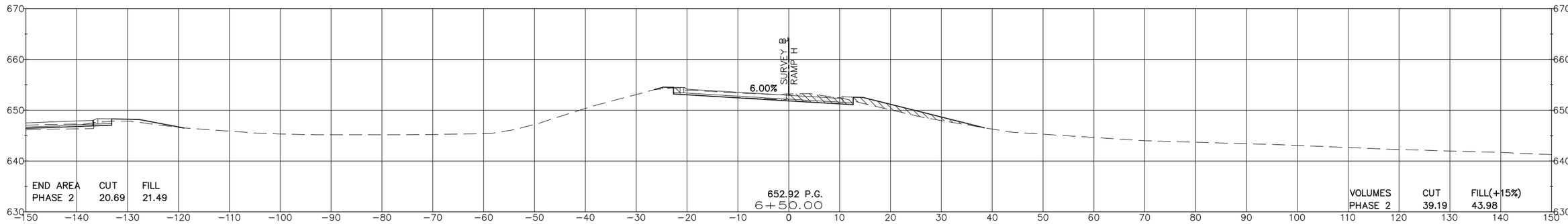

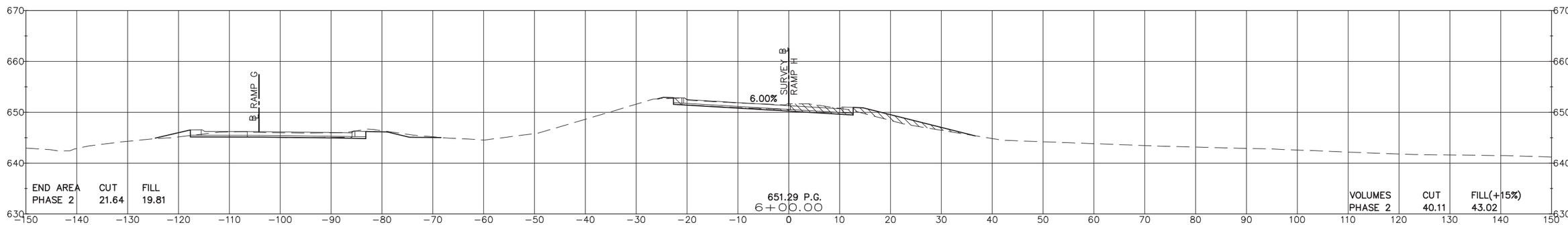

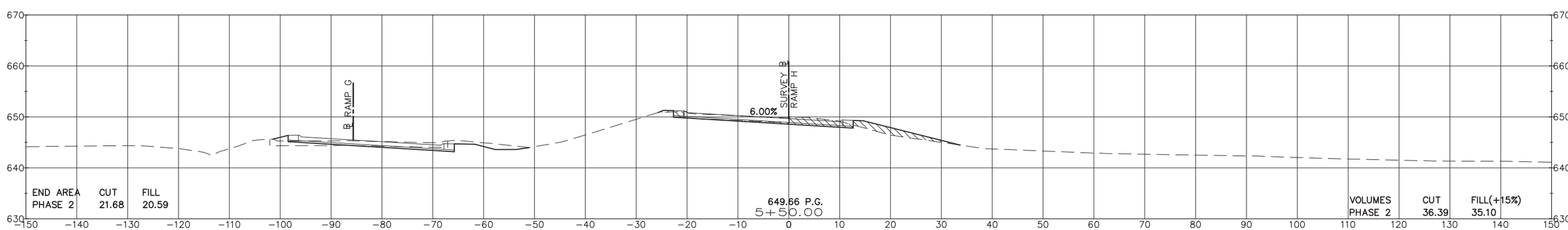

PHASE 2

Survey	CKS	
Drawn	CKD	
Checked	CKE	
Approved		
Squad	C & K	

INTERCHANGE (OPERATIONAL IMPROVEMENTS) TULSA COUNTY

RAMP H

STA. 5+50.00 TO STA. 7+00.00

JOB PIECE NO. 10981(05) SHEET NO. X053

S:\Projects\ODOT\2015 EC-1710 I-44-169 Interchange\ACAD\PS&E\Plans\X050-X054-1098105-RAMP H.dwg, X053, 9/17/2021 3:17:37 PM

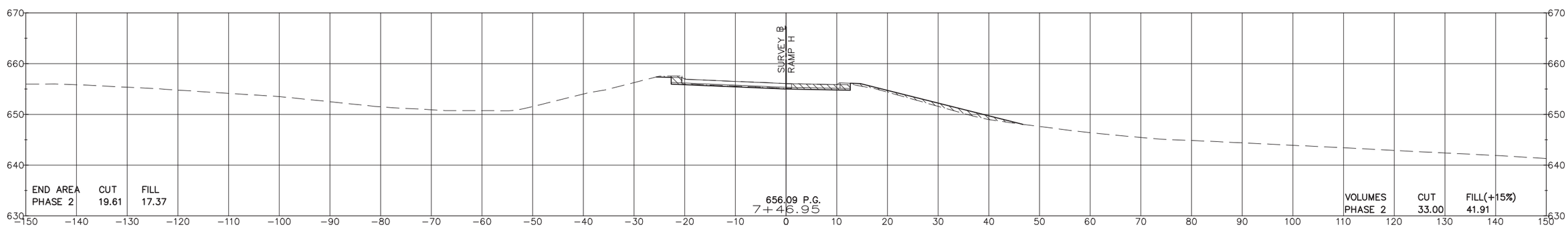

PHASE 2

Survey	CKS	
Drawn	CKD	
Checked	CKE	
Approved		
Squad	C & K	

INTERCHANGE (OPERATIONAL IMPROVEMENTS) TULSA COUNTY

RAMP H
STA. 7+46.95

JOB PIECE NO. 10981(05) SHEET NO. X054

S:\Projects\ODOT\2015 EC-1710 I-44-169 Interchange\ACAD\PS&E\Plans\X050-X054-10981(05)-RAMP H.dwg, X054, 9/17/2021 3:17:42 PM