REVISIONS		
DESCRIPTION		DATE

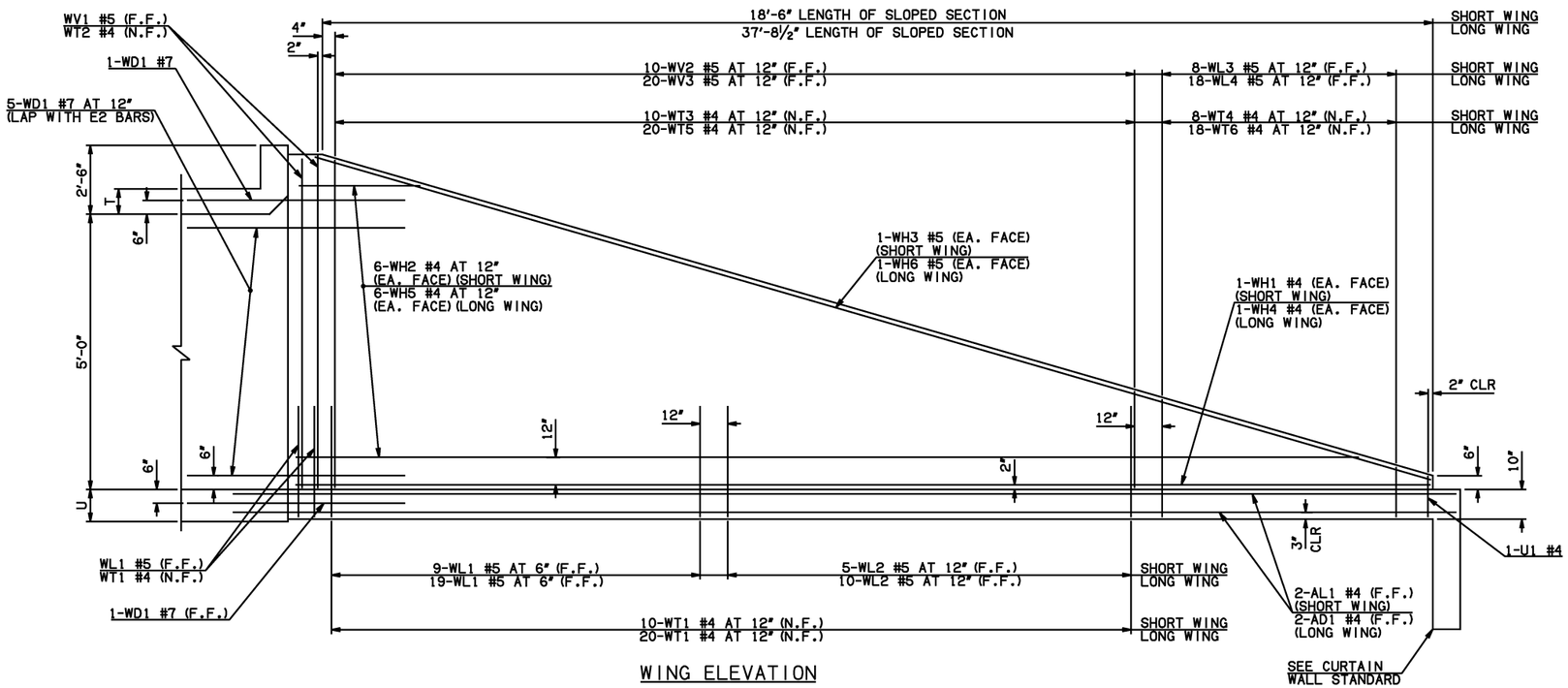

WING ELEVATION

NOTE: F.F. = FAR FACE
N.F. = NEAR FACE

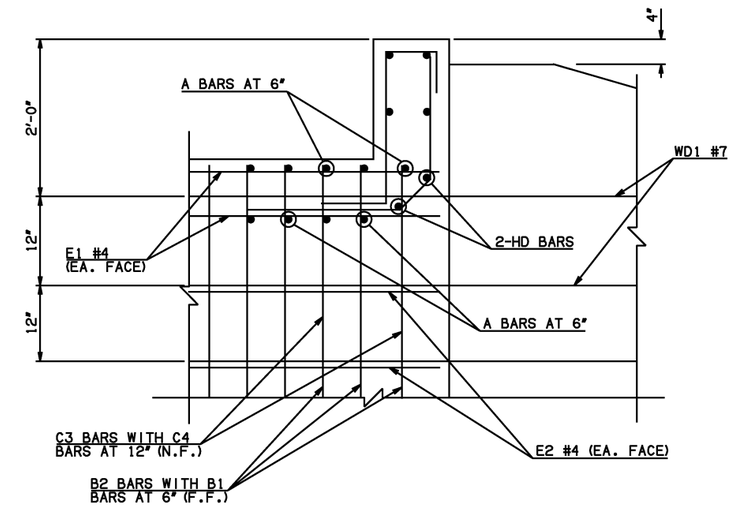

② HEADWALL DETAIL AT EXTERIOR WALL

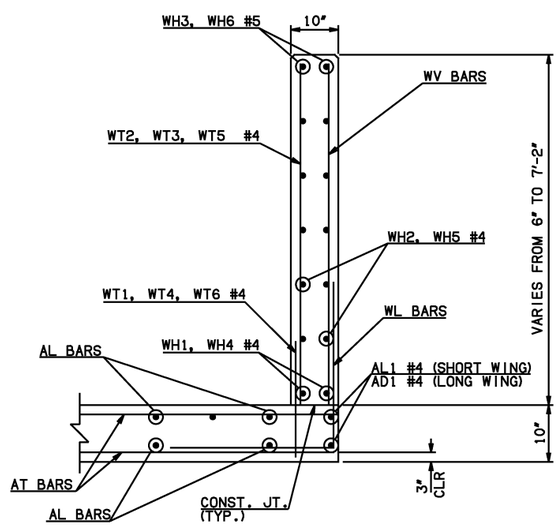

TYPICAL SECTION THRU WING

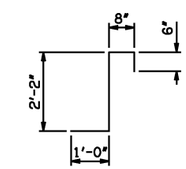

CL1 AT 4'-4"

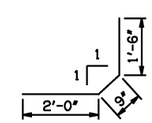

CL2 AT 4'-3"

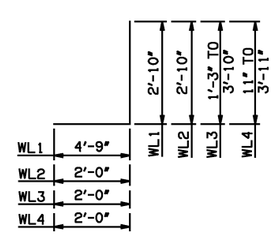

WL1 #5 x 7'-7"
WL2 #5 x 4'-10"
WL3 #5 x 4'-6½" AVG.
WL4 #5 x 4'-5" AVG.

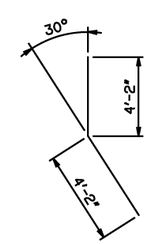

WD1 #7 x 8'-4"

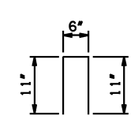

U1 #4 x 2'-4"

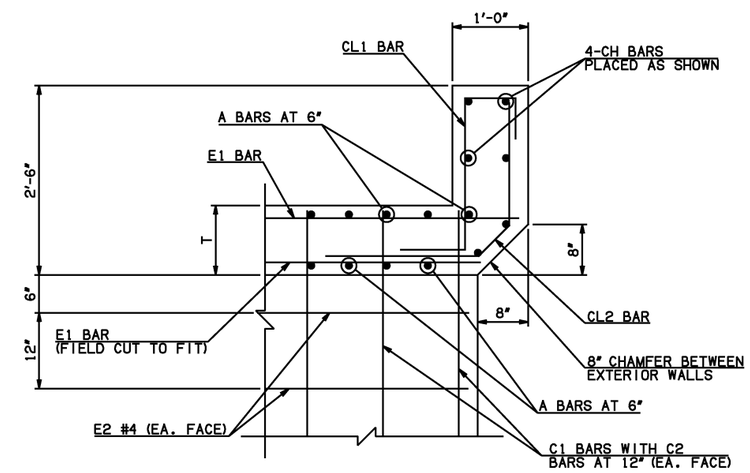

② HEADWALL DETAIL AT INTERIOR WALL

DIMENSION SHOWN NORMAL TO HEADWALL

NOTES:

① QUANTITY SHOWN REPRESENTS TWO SETS.

② FOR FURTHER INFORMATION REGARDING END SECTION A, B, C, AND E BARS REFER TO RCB CULVERT - BARREL DETAILS.

WINGWALL BAR LIST
(LONG AND SHORT WING INCLUDED)

	MARK	SIZE	QTY.	FORM	LENGTH	REMARKS
	WD1	#7	14	BNT	8'-4"	
	WH1	#4	2	STR	19'-4"	
①	WH2	#4	12	STR	10'-1½" AVG.	3'-2" TO 17'-1"
	WH3	#5	2	STR	19'-5"	
	WH4	#4	2	STR	38'-6"	
①	WH5	#4	12	STR	19'-9" AVG.	5'-7" TO 33'-11"
	WH6	#5	2	STR	38'-1"	
	WL1	#5	32	BNT	7'-7"	
	WL2	#5	15	BNT	4'-10"	
	WL3	#5	8	BNT	4'-6½" AVG.	3'-3" TO 5'-10"
	WL4	#5	18	BNT	4'-5" AVG.	2'-11" TO 5'-11"
	WT1	#4	35	STR	2'-10"	
	WT2	#4	5	STR	7'-0"	
	WT3	#4	10	STR	5'-2½" AVG.	3'-7" TO 6'-10"
	WT4	#4	8	STR	2'-6½" AVG.	1'-3" TO 3'-10"
	WT5	#4	20	STR	5'-2½" AVG.	3'-6" TO 6'-11"
	WT6	#4	18	STR	2'-5" AVG.	11" TO 3'-11"
	WV1	#5	4	STR	7'-0"	
	WV2	#5	10	STR	5'-2½" AVG.	3'-7" TO 6'-10"
	WV3	#5	20	STR	5'-2½" AVG.	3'-6" TO 6'-11"
	U1	#4	2	BNT	2'-4"	

HEADWALL BAR LIST

ONE HEADWALL SHOWN

MARK	FORM	5' SPAN			6' SPAN			8' SPAN			10' SPAN		
		SIZE	QTY.	LENGTH	SIZE	QTY.	LENGTH	SIZE	QTY.	LENGTH	SIZE	QTY.	LENGTH
CH	STR	#4	4	14'-8"	#4	4	16'-11"	#4	4	21'-7"	#6	4	26'-6"
CL1	BNT	#4	15	4'-4"	#4	17	4'-4"	#4	22	4'-4"	#5	27	4'-4"
CL2	BNT	#4	15	4'-3"	#4	17	4'-3"	#4	22	4'-3"	#5	27	4'-3"
HD	STR	#6	2	14'-8"	#6	2	16'-11"	#6	2	21'-7"	#8	2	26'-6"

APPROVED BY BRIDGE ENGINEER — DATE 4/2/10

OKLAHOMA DEPT. OF TRANSPORTATION
BRIDGE STANDARD (ENGLISH)

RCB CULVERTS - END SECTION DETAILS
DOUBLE CELL - 5'-0" HEIGHT - 30°
SHEET NO. 3 OF 3

2009 SPECIFICATIONS	RCB-E2-H5-30-3	01E
		B-713E