| DESCRIPTION | REVISIONS | DATE |
|---|---|---|
| | | |

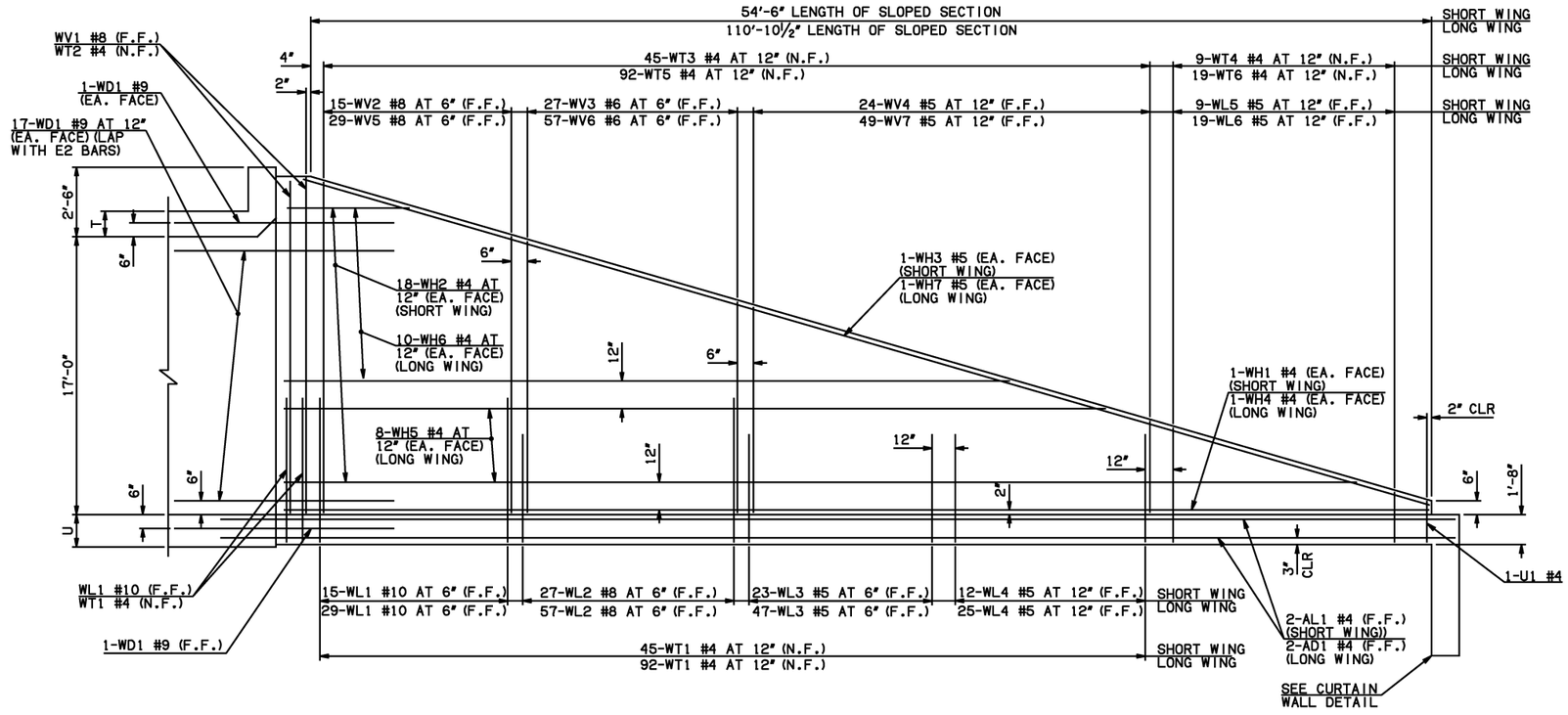


NOTE: F.F. = FAR FACE
N.F. = NEAR FACE

WING ELEVATION

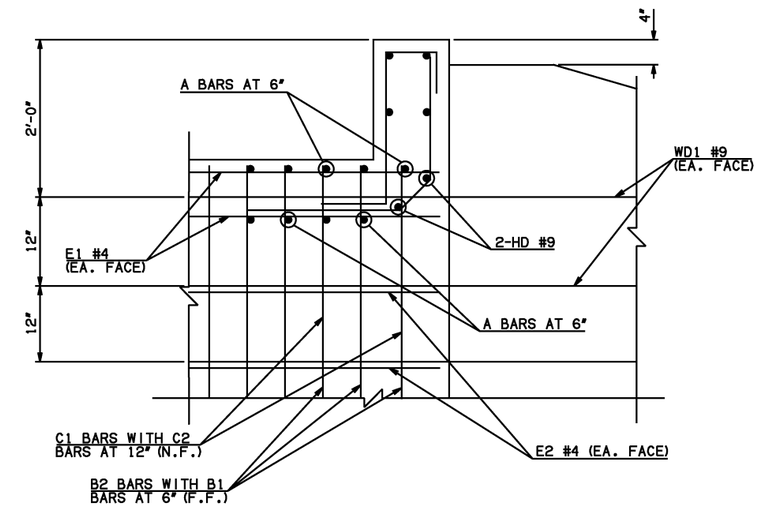


④ HEADWALL DETAIL AT EXTERIOR WALL

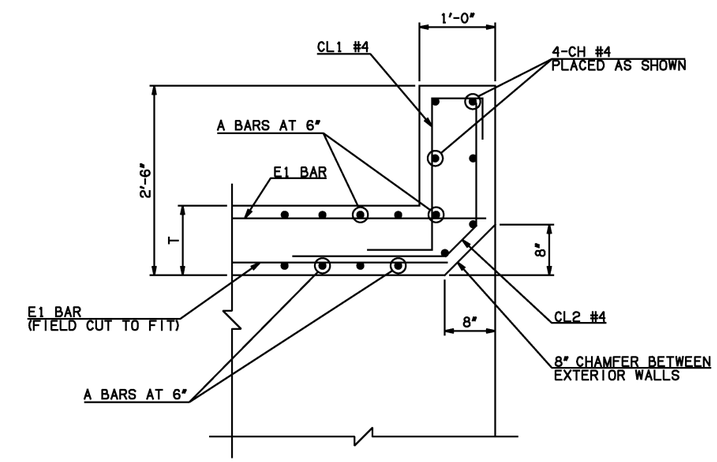


④ HEADWALL DETAIL AT MIDSPAN

DIMENSION SHOWN NORMAL TO HEADWALL

NOTES:

① INCLUDES 2'-6" LAP

③ QUANTITY SHOWN REPRESENTS TWO SETS.

④ FOR FURTHER INFORMATION REGARDING END SECTION BARS A, B, C, E1, AND E2, REFER TO RCB CULVERT - BARREL DETAILS.

WINGWALL BAR LIST
(LONG AND SHORT WING INCLUDED)

| | MARK | SIZE | QTY. | FORM | LENGTH | REMARKS |
|---|---|---|---|---|---|---|
| | WD1 | #9 | 74 | BNT | 8'-4" | |
| | WH1 | #4 | 2 | STR | 55'-4" | |
| ③ | WH2 | #4 | 36 | STR | 28'-2" AVG. | 3'-4" TO 53'-0" |
| | WH3 | #5 | 2 | STR | 57'-5" | |
| ① | WH4 | #4 | 2 | STR | 114'-2" | |
| ③① | WH5 | #4 | 16 | STR | 88'-6½" AVG. | 67'-9" TO 109'-4" |
| ③ | WH6 | #4 | 20 | STR | 32'-7" AVG. | 5'-10" TO 59'-4" |
| ① | WH7 | #5 | 2 | STR | 114'-9" | |
| | WL1 | #10 | 48 | BNT | 21'-10" | |
| | WL2 | #8 | 84 | BNT | 19'-3" | |
| | WL3 | #5 | 70 | BNT | 12'-4" | |
| | WL4 | #5 | 37 | BNT | 6'-10" | |
| | WL5 | #5 | 9 | BNT | 5'-5½" AVG. | 4'-1" TO 6'-10" |
| | WL6 | #5 | 19 | BNT | 5'-4" AVG. | 3'-10" TO 6'-10" |
| | WT1 | #4 | 142 | STR | 3'-6" | |
| | WT2 | #4 | 5 | STR | 19'-0" | |
| | WT3 | #4 | 45 | STR | 11'-3½" AVG. | 3'-9" TO 18'-10" |
| | WT4 | #4 | 9 | STR | 3'-5½" AVG. | 2'-1" TO 4'-10" |
| | WT5 | #4 | 92 | STR | 11'-3" AVG. | 3'-7" TO 18'-11" |
| | WT6 | #4 | 19 | STR | 3'-4" AVG. | 1'-10" TO 4'-10" |
| | WV1 | #8 | 4 | STR | 19'-0" | |
| | WV2 | #8 | 15 | STR | 17'-7½" AVG. | 16'-5" TO 18'-10" |
| | WV3 | #6 | 27 | STR | 14'-0½" AVG. | 11'-10" TO 16'-3" |
| | WV4 | #5 | 24 | STR | 7'-8½" AVG. | 3'-9" TO 11'-8" |
| | WV5 | #8 | 29 | STR | 17'-9" AVG. | 16'-7" TO 18'-11" |
| | WV6 | #6 | 57 | STR | 14'-1½" AVG. | 11'-9" TO 16'-6" |
| | WV7 | #5 | 49 | STR | 7'-7½" AVG. | 3'-7" TO 11'-8" |
| | U1 | #4 | 2 | BNT | 4'-8" | |

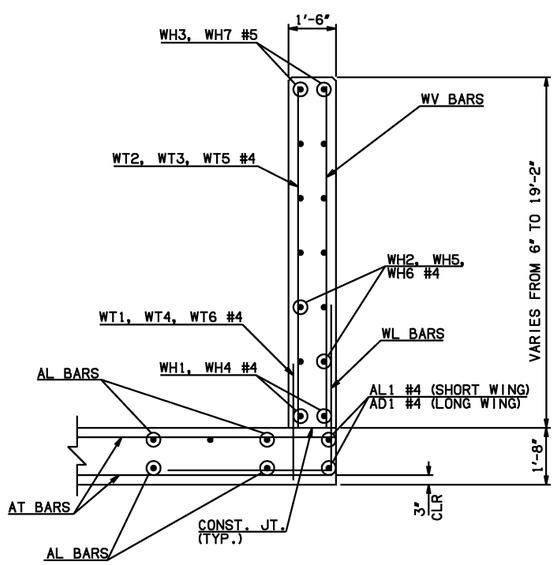


TYPICAL SECTION THRU WING

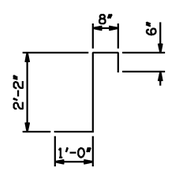


CL1 #4 x 4'-4"

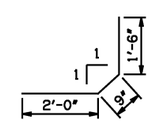


CL2 #4 x 4'-3"

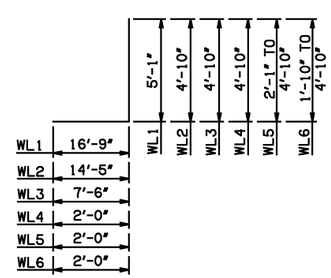


WL1 #10 x 21'-10"
WL2 #8 x 19'-3"
WL3 #5 x 12'-4"
WL4 #5 x 6'-10"
WL5 #5 x 5'-5½" AVG.
WL6 #5 x 5'-4" AVG.

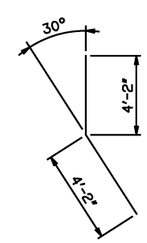


WD1 #9 x 8'-4"

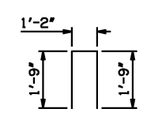


U1 #4 x 4'-8"

APPROVED BY BRIDGE ENGINEER [signature] DATE 4/2/10

**OKLAHOMA DEPT. OF TRANSPORTATION**
**BRIDGE STANDARD (ENGLISH)**

RCB CULVERTS - END SECTION DETAILS
SINGLE CELL - 17'-0" HEIGHT - 30°
SHEET NO. 3 OF 3

| 2009 SPECIFICATIONS | RCB-E1-H17-30-3 | 01E |
|---|---|---|
| | | B-698E |