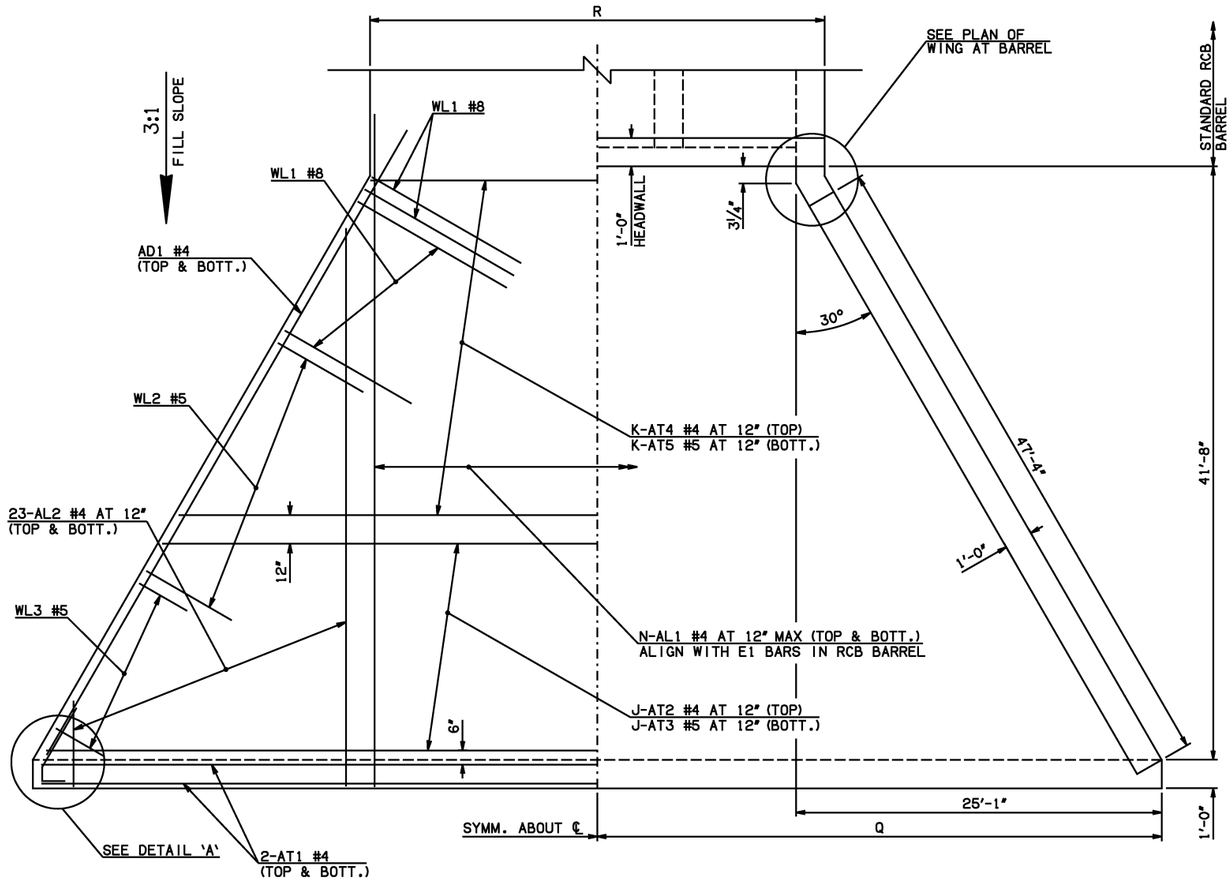

HALF APRON REINFORCING

HALF APRON PLAN

APRON DETAIL

WINGWALL DIMENSIONS			
SPAN	W	D	F
12'	12"	8¾"	0
14'	12"	8¾"	0
16'	13"	6¾"	1¾"
18'	14"	4¾"	3½"
20'	15"	2¾"	5¼"

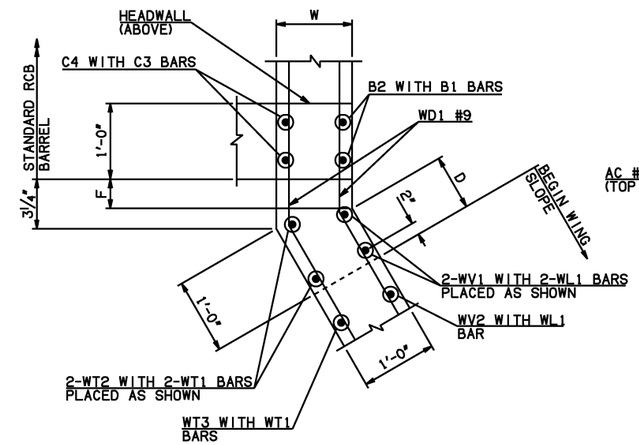

PLAN OF WING AT BARREL

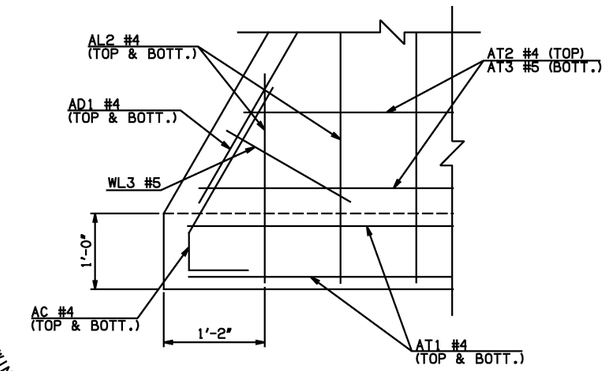

DETAIL 'A'

APRON VARIABLES					
SPAN	DIM. R	DIM. Q	QTY. J	QTY. K	QTY. N
12'	40'-0"	44'-1"	24	18	44
14'	46'-0"	47'-1"	29	13	50
16'	52'-2"	50'-1"	35	7	56
18'	58'-4"	53'-1"	40	2	62
20'	64'-6"	56'-1"	42	0	68

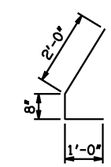

AC #4 × 3'-8"

WINGWALL BAR LIST					
ONE WINGWALL SHOWN; TWO REQUIRED					
MARK	SIZE	QTY.	FORM	LENGTH	REMARKS
WD1	#9	26	BNT	8'-4"	
WH1	#4	2	STR	48'-2"	
② WH2	#4	26	STR	24'-7½" AVG.	3'-10" TO 45'-5"
WH3	#5	2	STR	49'-1"	
WL1	#8	29	BNT	17'-11"	
WL2	#5	35	BNT	10'-9"	
WL3	#5	10	BNT	4'-9½" AVG.	3'-6" TO 6'-1"
WT1	#4	39	STR	2'-10"	
WT2	#4	2	STR	14'-0"	
WT3	#4	14	STR	11'-11½" AVG.	10'-1" TO 13'-10"
WT4	#4	23	STR	6'-8" AVG.	3'-6" TO 9'-10"
WT5	#4	10	STR	2'-9½" AVG.	1'-6" TO 4'-1"
WV1	#6	2	STR	14'-0"	
WV2	#6	27	STR	11'-11½" AVG.	10'-1" TO 13'-10"
WV3	#5	23	STR	6'-8" AVG.	3'-6" TO 9'-10"
U1	#4	1	BNT	3'-2"	

① 4-SETS OF 23-AL2 BARS REQUIRED
② 2-SETS OF 13-WH2 BARS REQUIRED
③ INCLUDES 2'-6" LAP

APRON AND HEADWALL BAR LIST																	
ONE APRON AND ONE HEADWALL SHOWN																	
MARK	SIZE	FORM	12' SPAN			14' SPAN			16' SPAN			18' SPAN			20' SPAN		
			QTY.	LENGTH	REMARKS	QTY.	LENGTH	REMARKS	QTY.	LENGTH	REMARKS	QTY.	LENGTH	REMARKS	QTY.	LENGTH	REMARKS
AC	#4	BNT	4	3'-8"		4	3'-8"		4	3'-8"		4	3'-8"		4	3'-8"	
AD1	#4	STR	4	50'-2"		4	50'-2"		4	50'-2"		4	50'-2"		4	50'-2"	
AL1	#4	STR	88	44'-6"		100	44'-6"		112	44'-6"		124	44'-6"		136	44'-6"	
① AL2	#4	STR	92	21'-6½" AVG.	2'-6" TO 40'-7"	92	21'-6½" AVG.	2'-6" TO 40'-7"	92	21'-6½" AVG.	2'-6" TO 40'-7"	92	21'-6½" AVG.	2'-6" TO 40'-7"	92	21'-6½" AVG.	2'-6" TO 40'-7"
AT1	#4	STR	4	90'-4" ③		4	96'-4" ③		4	102'-4" ③		4	108'-4" ③		4	114'-4" ③	
AT2	#4	STR	24	76'-6½" AVG.	63'-3" TO 89'-10"③	29	79'-8" AVG.	63'-6" TO 95'-10"③	35	82'-2" AVG.	62'-6" TO 101'-10"③	40	85'-3½" AVG.	62'-9" TO 107'-10"③	42	90'-1½" AVG.	66'-5" TO 113'-10"③
AT3	#5	STR	24	76'-6½" AVG.	63'-3" TO 89'-10"③	29	79'-8" AVG.	63'-6" TO 95'-10"③	35	82'-2" AVG.	62'-6" TO 101'-10"③	40	85'-3½" AVG.	62'-9" TO 107'-10"③	42	90'-1½" AVG.	66'-5" TO 113'-10"③
AT4	#4	STR	18	49'-9" AVG.	39'-11" TO 59'-7"	13	52'-10½" AVG.	45'-11" TO 59'-10"	7	55'-5" AVG.	51'-2" TO 58'-11"	2	58'-6" AVG.	52'-11" TO 59'-1"	0		
AT5	#5	STR	18	49'-9" AVG.	39'-11" TO 59'-7"	13	52'-10½" AVG.	45'-11" TO 59'-10"	7	55'-5" AVG.	51'-2" TO 58'-11"	2	58'-6" AVG.	52'-11" TO 59'-1"	0		
CH	#4	STR	4	39'-8"		4	45'-8"		4	51'-10"		4	58'-0"		4	66'-8" ③	
CL1	#4	BNT	44	4'-4"		50	4'-4"		56	4'-4"		62	4'-4"		68	4'-4"	
CL2	#4	BNT	44	4'-3"		50	4'-3"		56	4'-3"		62	4'-3"		68	4'-3"	

QUANTITIES						
ITEM	UNIT	12' SPAN	14' SPAN	16' SPAN	18' SPAN	20' SPAN
CLASS AA CONCRETE	CY	147.00	158.00	169.30	180.40	191.40
REINFORCING STEEL	LB	17750.00	18640.00	19520.00	20400.00	21270.00

NOTE: QUANTITIES ABOVE ARE FOR ONE END SECTION, WHICH IS COMPRISED OF ONE HEADWALL, ONE APRON, AND TWO WINGWALLS.
INCLUDED IN REINFORCING STEEL PAY ITEM QUANTITY IS THE WEIGHT OF ADDITIONAL RCB BARREL REINFORCING STEEL REQUIRED AS SHOWN.

DESCRIPTION	REVISIONS	DATE

APPROVED BY BRIDGE ENGINEER [signature] DATE 4/2/10

OKLAHOMA DEPT. OF TRANSPORTATION
BRIDGE STANDARD (ENGLISH)

RCB CULVERTS - END SECTION DETAILS
TRIPLE CELL - 12'-0" HEIGHT - 0°
SHEET NO. 1 OF 2

2009 SPECIFICATIONS | RCB-E3-H12-0-1 | 01E
B-646E