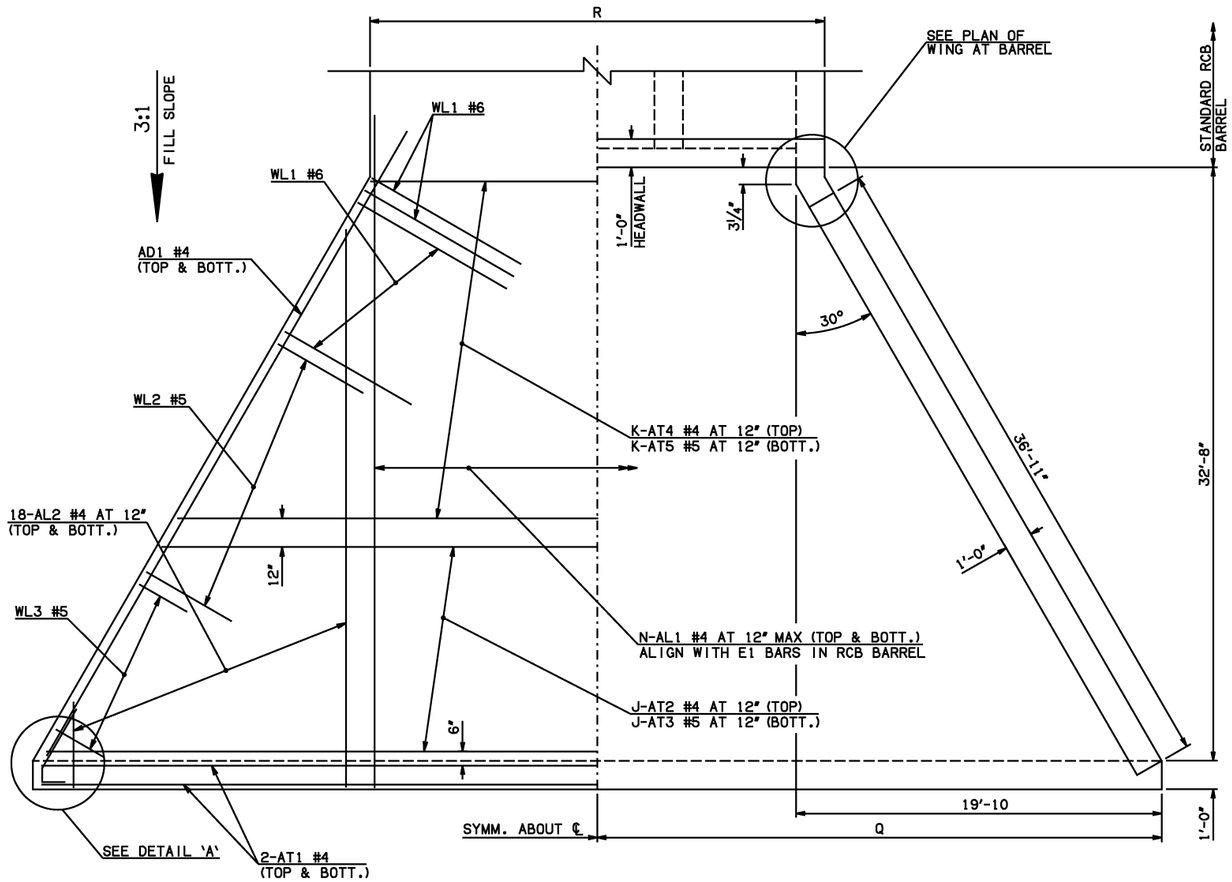

HALF APRON REINFORCING

HALF APRON PLAN

APRON DETAIL

WINGWALL DIMENSIONS			
SPAN	W	D	F
10'	12"	8¾"	0
12'	12"	8¾"	0
14'	12"	8¾"	0
16'	13"	6¾"	1¾"
18'	14"	4¾"	3½"

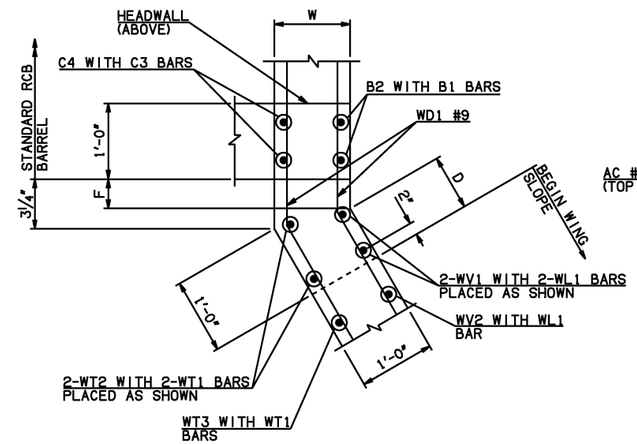

PLAN OF WING AT BARREL

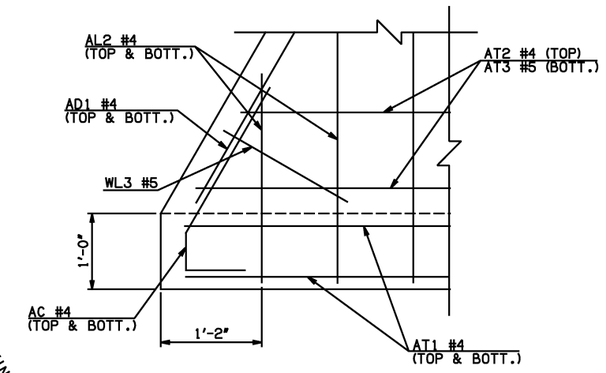

DETAIL 'A'

APRON VARIABLES					
SPAN	DIM. R	DIM. Q	QTY. J	QTY. K	QTY. N
10'	34'-0"	35'-10"	10	23	38
12'	40'-0"	38'-10"	15	18	44
14'	46'-0"	41'-10"	20	13	50
16'	52'-2"	44'-10"	25	8	56
18'	58'-4"	47'-10"	31	2	62

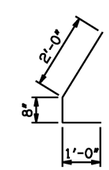

AC #4 x 3'-8"

WINGWALL BAR LIST					
ONE WINGWALL SHOWN; TWO REQUIRED					
MARK	SIZE	QTY.	FORM	LENGTH	REMARKS
WD1	#9	20	BNT	8'-4"	
WH1	#4	2	STR	37'-9"	
② WH2	#4	20	STR	19'-5" AVG.	3'-10" TO 35'-0"
WH3	#5	2	STR	38'-3"	
WL1	#6	13	BNT	13'-10"	
WL2	#5	31	BNT	10'-3"	
WL3	#5	11	BNT	4'-8½" AVG.	3'-3" TO 6'-2"
WT1	#4	28	STR	2'-10"	
WT2	#4	2	STR	11'-0"	
WT3	#4	6	STR	10'-1½" AVG.	9'-5" TO 10'-10"
WT4	#4	20	STR	6'-5" AVG.	3'-8" TO 9'-2"
WT5	#4	11	STR	2'-8½" AVG.	1'-3" TO 4'-2"
WV1	#5	2	STR	11'-0"	
WV2	#5	11	STR	10'-1½" AVG.	9'-5" TO 10'-10"
WV3	#5	20	STR	6'-5" AVG.	3'-8" TO 9'-2"
U1	#4	1	BNT	3'-0"	

① 4-SETS OF 18-AL2 BARS REQUIRED
② 2-SETS OF 10-WH2 BARS REQUIRED
③ INCLUDES 2'-6" LAP

APRON AND HEADWALL BAR LIST																	
ONE APRON AND ONE HEADWALL SHOWN																	
MARK	SIZE	FORM	10' SPAN			12' SPAN			14' SPAN			16' SPAN			18' SPAN		
			QTY.	LENGTH	REMARKS	QTY.	LENGTH	REMARKS	QTY.	LENGTH	REMARKS	QTY.	LENGTH	REMARKS	QTY.	LENGTH	REMARKS
AC	#4	BNT	4	3'-8"		4	3'-8"		4	3'-8"		4	3'-8"		4	3'-8"	
AD1	#4	STR	4	39'-9"		4	39'-9"		4	39'-9"		4	39'-9"		4	39'-9"	
AL1	#4	STR	76	35'-5"		88	35'-5"		100	35'-5"		112	35'-5"		124	35'-5"	
① AL2	#4	STR	72	17'-2½" AVG.	2'-6" TO 31'-11"	72	17'-2½" AVG.	2'-6" TO 31'-11"	72	17'-2½" AVG.	2'-6" TO 31'-11"	72	17'-2½" AVG.	2'-6" TO 31'-11"	72	17'-2½" AVG.	2'-6" TO 31'-11"
AT1	#4	STR	4	73'-10" ③		4	79'-10" ③		4	85'-10" ③		4	91'-10" ③		4	97'-10" ③	
AT2	#4	STR	10	68'-1½" AVG.	62'-11" TO 73'-4" ③	15	71'-3" AVG.	63'-2" TO 79'-4" ③	20	74'-4" AVG.	63'-4" TO 85'-4" ③	25	77'-5½" AVG.	63'-7" TO 91'-4" ③	31	80'-0" AVG.	62'-8" TO 97'-4" ③
AT3	#5	STR	10	68'-1½" AVG.	62'-11" TO 73'-4" ③	15	71'-3" AVG.	63'-2" TO 79'-4" ③	20	74'-4" AVG.	63'-4" TO 85'-4" ③	25	77'-5½" AVG.	63'-7" TO 91'-4" ③	31	80'-0" AVG.	62'-8" TO 97'-4" ③
AT4	#4	STR	23	46'-6½" AVG.	33'-10" TO 59'-3"	18	49'-8" AVG.	39'-10" TO 59'-6"	13	52'-9" AVG.	45'-10" TO 58'-8"	8	55'-10½" AVG.	51'-10" TO 59'-11"	2	58'-5" AVG.	57'-10" TO 59'-0"
AT5	#5	STR	23	46'-6½" AVG.	33'-10" TO 59'-3"	18	49'-8" AVG.	39'-10" TO 59'-6"	13	52'-9" AVG.	45'-10" TO 58'-8"	8	55'-10½" AVG.	51'-10" TO 59'-11"	2	58'-5" AVG.	57'-10" TO 59'-0"
CH	#4	STR	4	33'-8"		4	39'-8"		4	45'-8"		4	51'-10"		4	58'-0"	
CL1	#4	BNT	38	4'-4"		44	4'-4"		50	4'-4"		56	4'-4"		62	4'-4"	
CL2	#4	BNT	38	4'-3"		44	4'-3"		50	4'-3"		56	4'-3"		62	4'-3"	

QUANTITIES						
ITEM	UNIT	10' SPAN	12' SPAN	14' SPAN	16' SPAN	18' SPAN
CLASS AA CONCRETE	CY	90.00	98.20	106.50	114.70	122.80
REINFORCING STEEL	LB	10500.00	11200.00	11910.00	12620.00	13340.00

NOTE: QUANTITIES ABOVE ARE FOR ONE END SECTION, WHICH IS COMPRISED OF ONE HEADWALL, ONE APRON, AND TWO WINGWALLS. INCLUDED IN REINFORCING STEEL PAY ITEM QUANTITY IS THE WEIGHT OF ADDITIONAL RCB BARREL REINFORCING STEEL REQUIRED AS SHOWN.

REVISIONS		
DESCRIPTION		DATE

APPROVED BY BRIDGE ENGINEER [signature] DATE 4/2/10

OKLAHOMA DEPT. OF TRANSPORTATION
BRIDGE STANDARD (ENGLISH)

RCB CULVERTS - END SECTION DETAILS
TRIPLE CELL - 9'-0" HEIGHT - 0°
SHEET NO. 1 OF 2

2009 SPECIFICATIONS | RCB-E3-H9-0-1 | 01E

B-640E