DESCRIPTION	REVISIONS	DATE

④ NOTE: TO CONSTRUCT ONE END SECTION AS SHOWN, THE FOLLOWING BARS ARE REQUIRED IN ADDITION TO THOSE CALLED IN THE RCB BARREL STANDARD:

2-EXTERIOR WALL C BARS
2-EXTERIOR WALL C DOWEL BARS

ADDITIONAL WEIGHT IS INCLUDED IN QUANTITIES.

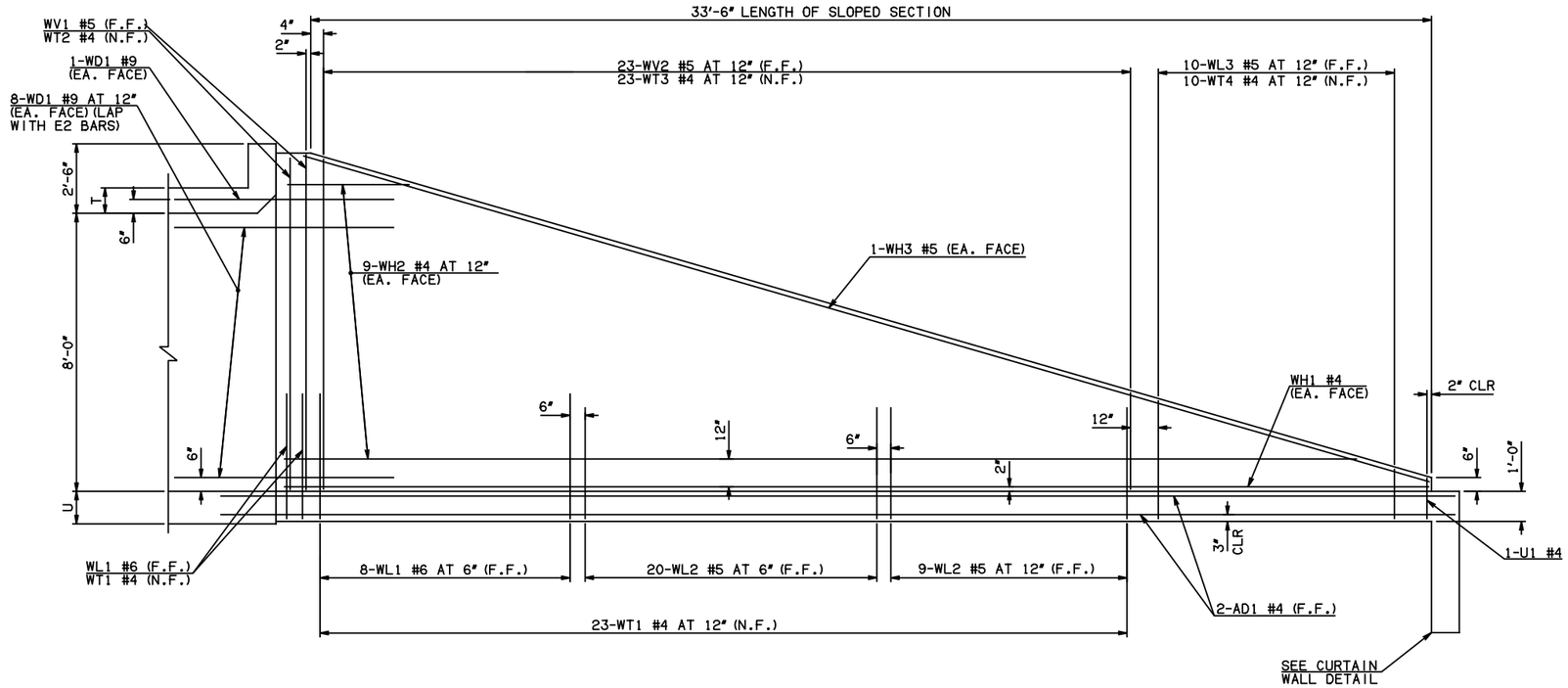

WING ELEVATION

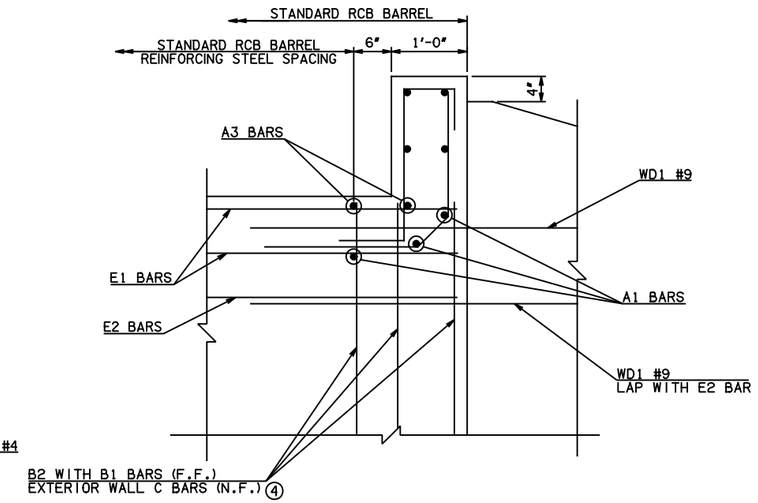

HEADWALL DETAIL AT EXTERIOR WALL

NOTE: F.F. = FAR FACE
N.F. = NEAR FACE

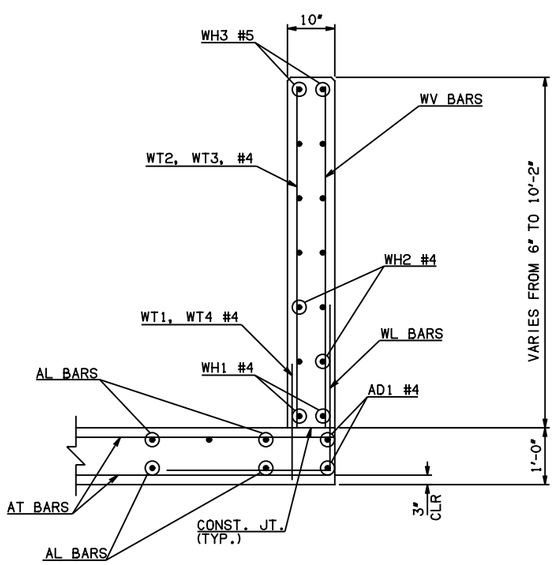

TYPICAL SECTION THRU WING

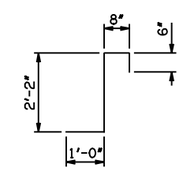

CL1 #4 x 4'-4"

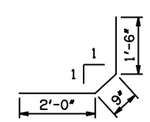

CL2 #4 x 4'-3"

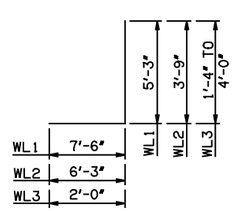

WL1 #6 x 12'-9"
WL2 #5 x 10'-0"
WL3 #5 x 4'-8" AVG.

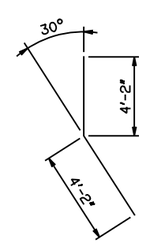

WD1 #9 x 8'-4"

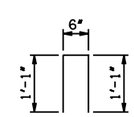

U1 #4 x 2'-8"

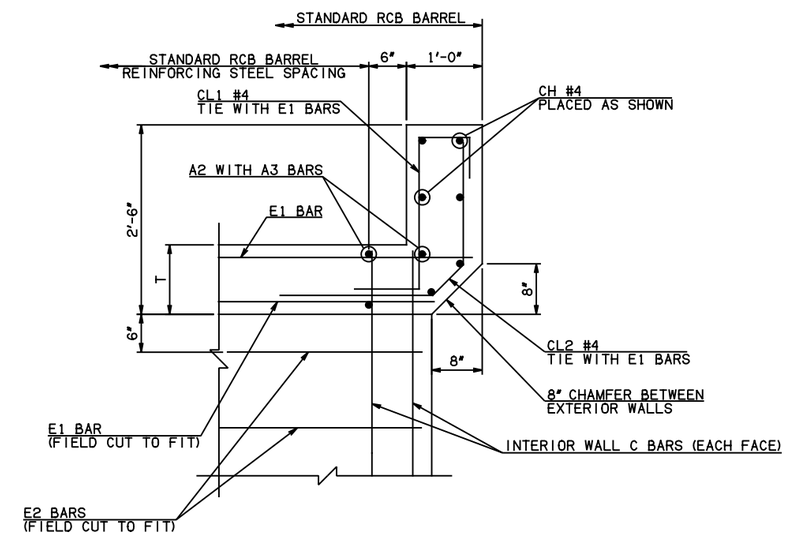

HEADWALL DETAIL AT INTERIOR WALL

APPROVED BY BRIDGE ENGINEER *Scott Lusch* DATE 4/2/10

OKLAHOMA DEPT. OF TRANSPORTATION
BRIDGE STANDARD (ENGLISH)

RCB CULVERTS - END SECTION DETAILS
DOUBLE CELL - 8'-0" HEIGHT - 0°
SHEET NO. 2 OF 2

2009 SPECIFICATIONS	RCB-E2-H8-0-2	01E
		B-611E