REVISIONS		
DESCRIPTION		DATE

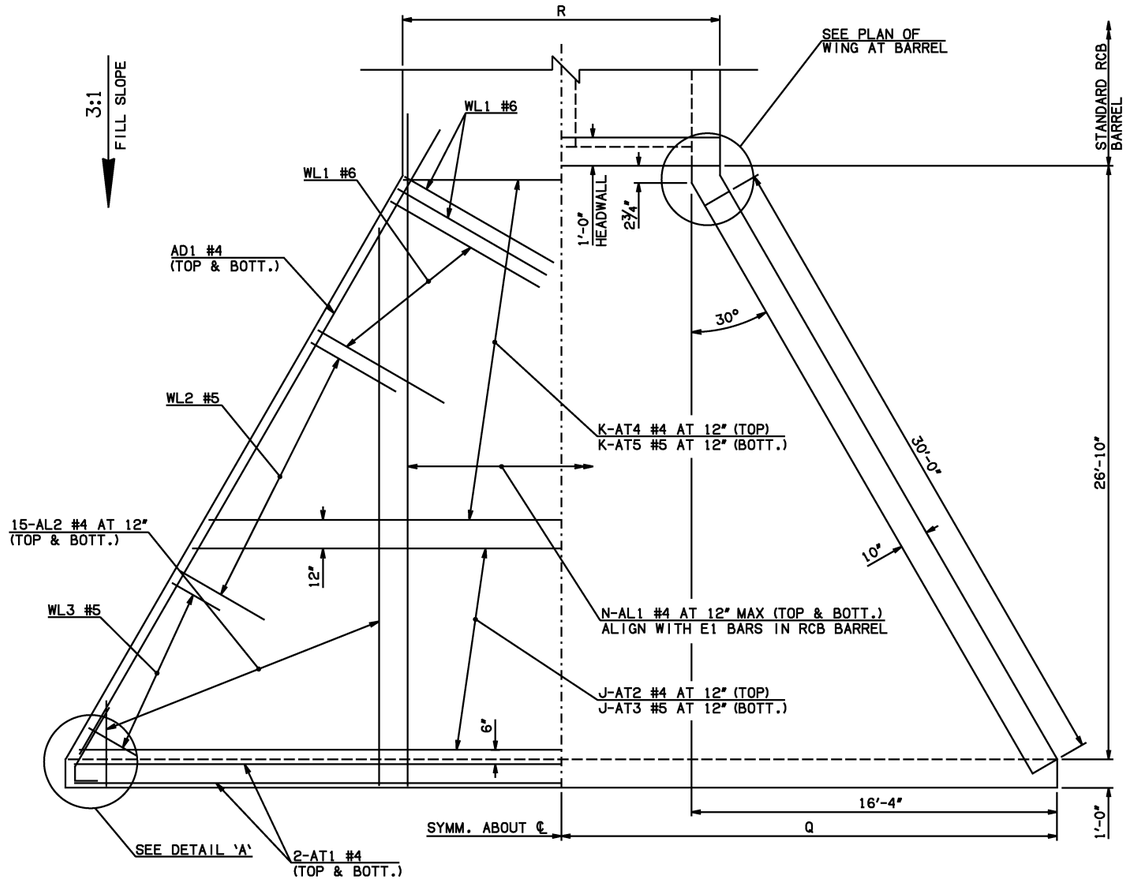

HALF APRON REINFORCING

HALF APRON PLAN

APRON DETAIL

WINGWALL DIMENSIONS			
SPAN	W	D	F
8'	12"	7¼"	3½"
10'	12"	7¼"	3½"
12'	12"	7¼"	3½"
14'	12"	7¼"	3½"

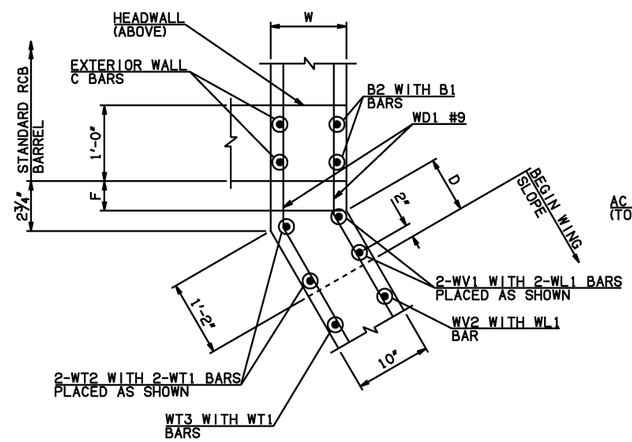

PLAN OF WING AT BARREL

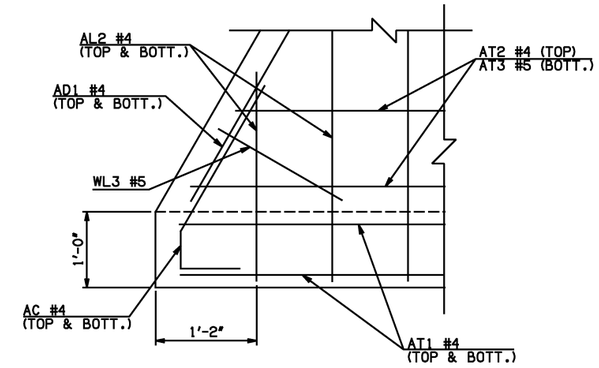

DETAIL 'A'

APRON VARIABLES					
SPAN	DIM. R	DIM. Q	QTY. J	QTY. K	QTY. N
8'	19'-0"	24'-10"	27	0	22
10'	23'-0"	26'-10"	27	0	26
12'	27'-0"	28'-10"	27	0	30
14'	31'-0"	30'-10"	1	26	34

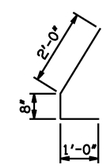

AC #4 x 3'-8"

WINGWALL BAR LIST					
ONE WINGWALL SHOWN; TWO REQUIRED					
MARK	SIZE	QTY.	FORM	LENGTH	REMARKS
WD1	#9	16	BNT	8'-4"	
WH1	#4	2	STR	31'-0"	
② WH2	#4	16	STR	16'-1½" AVG.	4'-0" TO 28'-3"
WH3	#5	2	STR	31'-0"	
WL1	#6	7	BNT	12'-9"	
WL2	#5	24	BNT	10'-0"	
WL3	#5	11	BNT	4'-7" AVG.	3'-2" TO 6'-0"
WT1	#4	21	STR	2'-10"	
WT2	#4	2	STR	9'-0"	
WT3	#4	19	STR	6'-3" AVG.	3'-8" TO 8'-10"
WT4	#4	11	STR	2'-7" AVG.	1'-2" TO 4'-0"
WV1	#5	2	STR	9'-0"	
WV2	#5	19	STR	6'-3" AVG.	3'-8" TO 8'-10"
U1	#4	1	BNT	2'-6"	

① 4-SETS OF 15-AL2 BARS REQUIRED
② 2-SETS OF 8-WH2 BARS REQUIRED
③ INCLUDES 2'-6" LAP

APRON AND HEADWALL BAR LIST														
ONE APRON AND ONE HEADWALL SHOWN														
MARK	SIZE	FORM	8' SPAN			10' SPAN			12' SPAN			14' SPAN		
			QTY.	LENGTH	REMARKS	QTY.	LENGTH	REMARKS	QTY.	LENGTH	REMARKS	QTY.	LENGTH	REMARKS
AC	#4	BNT	4	3'-8"		4	3'-8"		4	3'-8"		4	3'-8"	
AD1	#4	STR	4	33'-0"		4	33'-0"		4	33'-0"		4	33'-0"	
AL1	#4	STR	44	29'-8"		52	29'-8"		60	29'-8"		68	29'-8"	
① AL2	#4	STR	60	14'-7" AVG.	2'-6" TO 26'-8"	60	14'-7" AVG.	2'-6" TO 26'-8"	60	14'-7" AVG.	2'-6" TO 26'-8"	60	14'-7" AVG.	2'-6" TO 26'-8"
AT1	#4	STR	4	49'-4"		4	53'-4"		4	57'-4"		4	63'-10" ③	
AT2	#4	STR	27	33'-9½" AVG.	18'-9" TO 48'-10"	27	37'-9½" AVG.	22'-9" TO 52'-10"	27	41'-9½" AVG.	26'-9" TO 56'-10"	1	63'-4" ③	
AT3	#5	STR	27	33'-9½" AVG.	18'-9" TO 48'-10"	27	37'-9½" AVG.	22'-9" TO 52'-10"	27	41'-9½" AVG.	26'-9" TO 56'-10"	1	63'-4" ③	
AT4	#4	STR	0			0			0			26	45'-2½" AVG.	30'-9" TO 59'-8"
AT5	#5	STR	0			0			0			26	45'-2½" AVG.	30'-9" TO 59'-8"
CH	#4	STR	4	18'-8"		4	22'-8"		4	26'-8"		4	30'-8"	
CL1	#4	BNT	22	4'-4"		26	4'-4"		30	4'-4"		34	4'-4"	
CL2	#4	BNT	22	4'-3"		26	4'-3"		30	4'-3"		34	4'-3"	

QUANTITIES					
ITEM	UNIT	8' SPAN	10' SPAN	12' SPAN	14' SPAN
CLASS AA CONCRETE	CY	43.20	47.10	51.00	54.90
REINFORCING STEEL	LB	6390.00	6780.00	7160.00	7560.00

NOTE: QUANTITIES ABOVE ARE FOR ONE END SECTION, WHICH IS COMPRISED OF ONE HEADWALL, ONE APRON, AND TWO WINGWALLS. INCLUDED IN REINFORCING STEEL PAY ITEM QUANTITY IS THE WEIGHT OF ADDITIONAL RCB BARREL REINFORCING STEEL REQUIRED AS SHOWN.

APPROVED BY BRIDGE ENGINEER *Scott A. Busch* DATE 4/2/10

OKLAHOMA DEPT. OF TRANSPORTATION
BRIDGE STANDARD (ENGLISH)

RCB CULVERTS - END SECTION DETAILS
DOUBLE CELL - 7'-0" HEIGHT - 0°
SHEET NO. 1 OF 2

2009 SPECIFICATIONS | RCB-E2-H7-0-1 | 01E
B-608E