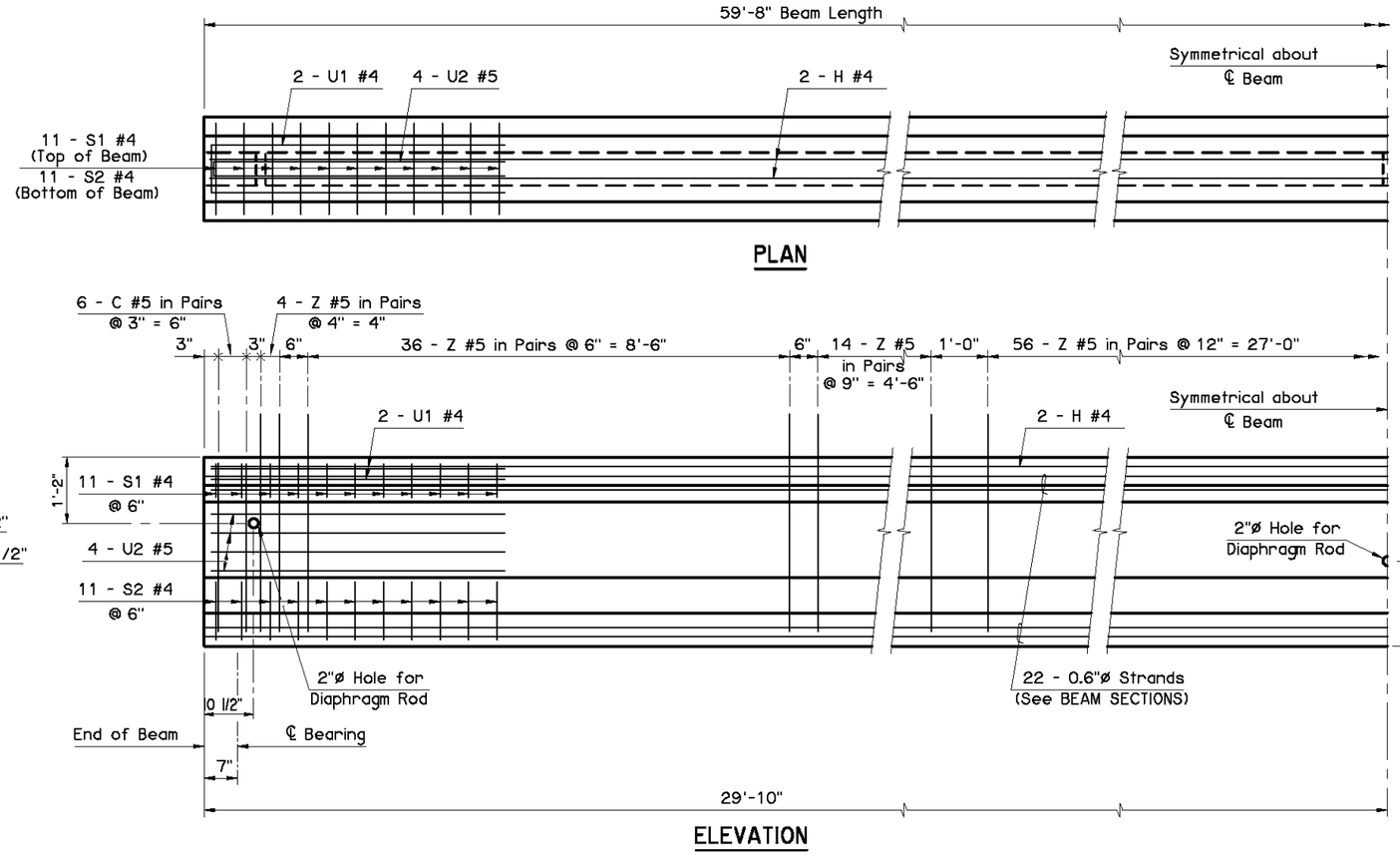

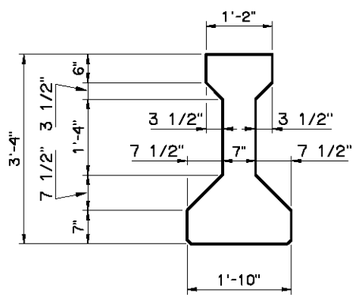

END VIEW
(Type C P.C.B.)

PRESTRESSED CONCRETE BEAM NOTES

COMPRESSIVE STRENGTH
Provide concrete with a compressive strength of 6,000 p.s.i. at transfer of prestress and 8,000 p.s.i. at 28 days.

STRAND TYPE
Provide low-relaxation strands having a nominal diameter of 0.6" with ultimate tensile strength of 270 k.s.i.

LFD OPERATING RATING - HS 38.4
The Operating Rating shown is based on a nominal strength using only strands that are bonded for the full length of the beam. All partially bonded strands are neglected in strength computations.

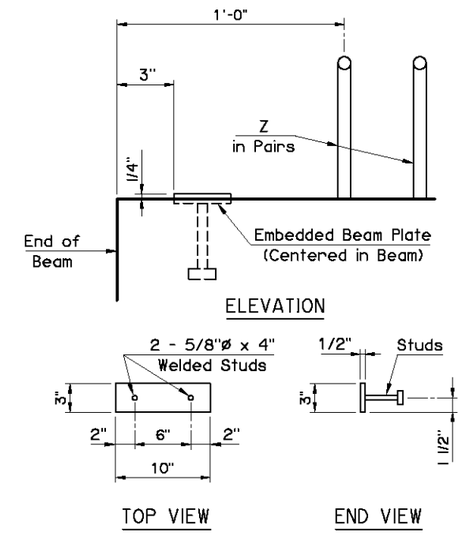

EMBEDDED BEAM PLATE DETAILS

NOTE:
Provide an Embedded Beam Plate at expansion ends only.

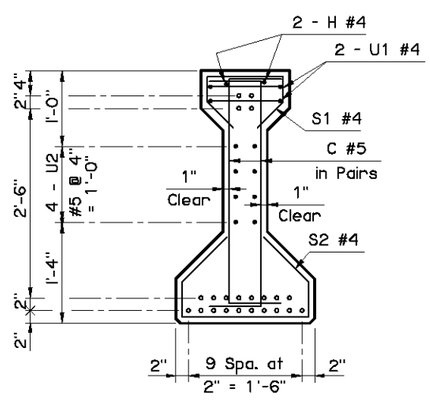

END SECTION

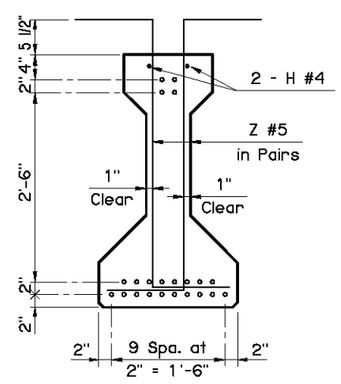

℄ SECTION

BEAM SECTIONS
(22 - 0.6"ø STRANDS)

Information shown on this sheet is applicable only to the standard bridge cross-section with 40' Clear Roadway, 8" Deck Slab and 4 Beams at 11'-4" spacing. Any deviation requires custom design and details with an appropriate Dead Load Deflection Diagram.

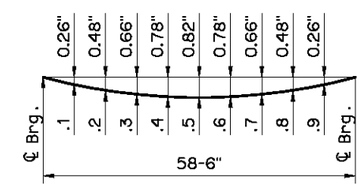

DEAD LOAD DEFLECTION DIAGRAM

NOTE:
The Dead Load Deflection shown above at the tenth points are the initial deflections due to Deck Slab + Diaphragms + Haunch + S.I.P. Steel Deck Form Allowance + Concrete Traffic Rail. It does not include the Beam weight or Future Wearing Surface.

APPROVED BY BRIDGE ENGINEER [signature] DATE 4/3/10

OKLAHOMA DEPT. OF TRANSPORTATION
BRIDGE STANDARD (ENGLISH)

TYPE C P.C. BEAM DETAILS
60' SPAN
CONVENTIONAL

2009 SPECIFICATIONS	B40-C-PCB-C-60	02E

B-300E