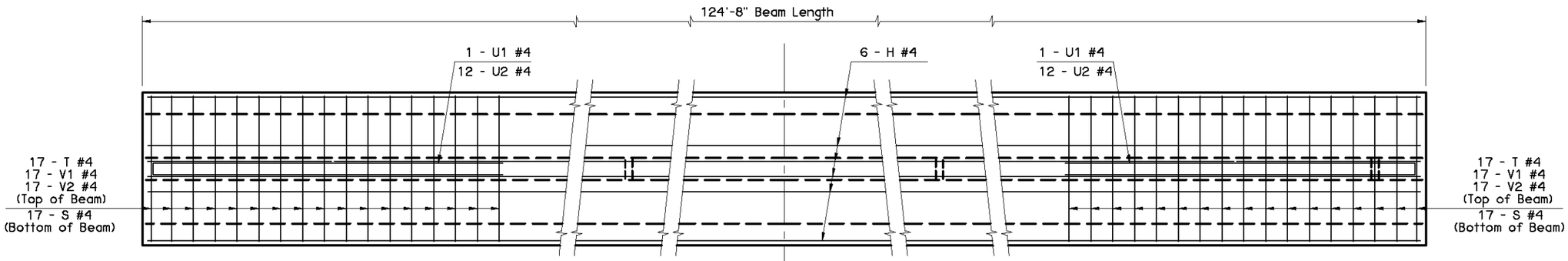

HALF PLAN AT ABUTMENT **HALF PLAN AT PIER**

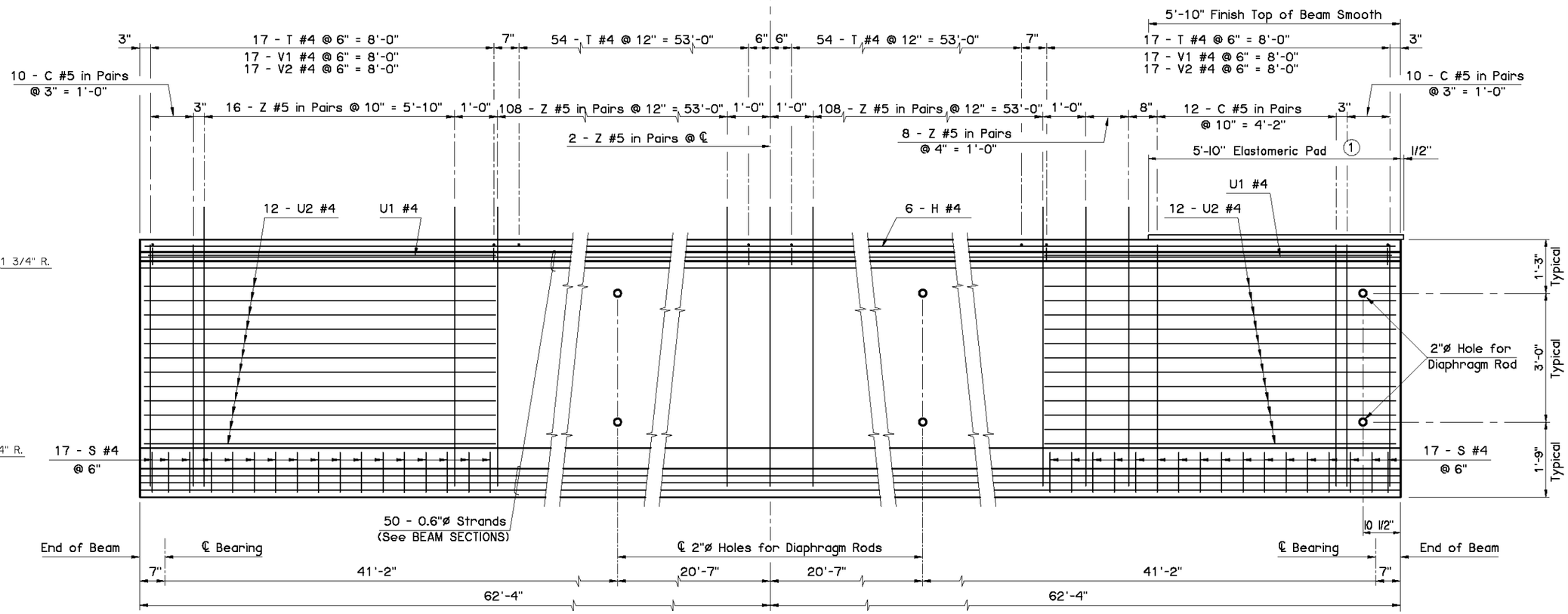

HALF ELEVATION AT ABUTMENT **HALF ELEVATION AT PIER**

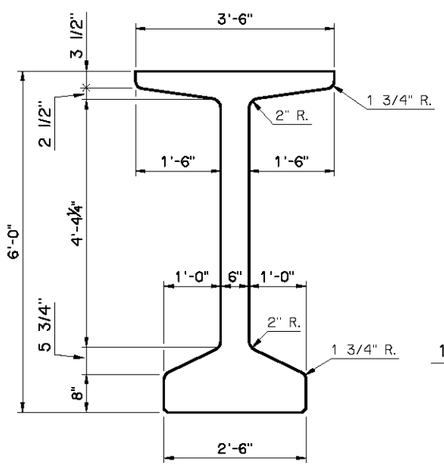

END VIEW
(Type J P.C.B.)

Information shown on this sheet is applicable only to the standard bridge cross-section with 40' Clear Roadway, 8" Deck Slab and 4 Beams at 11'-4" spacing. Any deviation requires custom design and details with an appropriate Dead Load Deflection Diagram.

PRESTRESSED CONCRETE BEAM NOTES

COMPRESSIVE STRENGTH
Provide concrete with a compressive strength of 7,000 p.s.i. at transfer of prestress and 10,000 p.s.i. at 28 days.

STRAND TYPE
Provide low-relaxation strands having a nominal diameter of 0.6" with ultimate tensile strength of 270 k.s.i.

LFD OPERATING RATING - HS 45.1
The Operating Rating shown is based on a nominal strength using only strands that are bonded for the full length of the beam. All partially bonded strands are neglected in strength computations.

(1) Provide Elastomeric Pad with a 50 durometer hardness and consisting of a single layer 7/8" thick x 3'-6" wide x 5'-10 1/2" long. Extend pad 1/2" beyond the end of the beam as shown.

APPROVED BY BRIDGE ENGINEER [signature] DATE 4/2/10

OKLAHOMA DEPT. OF TRANSPORTATION
BRIDGE STANDARD (ENGLISH)

TYPE J P.C. BEAM DETAILS
125' SPAN
INTEGRAL (SHEET 1 OF 2)

2009 SPECIFICATIONS	B40-I-PCB-J-125-1	02E

B-140E