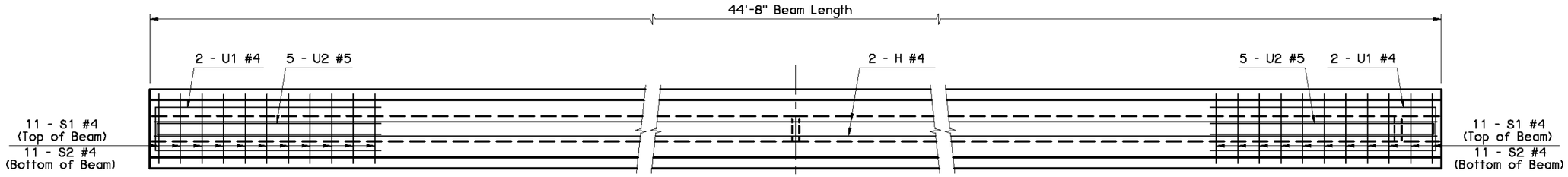

HALF PLAN AT ABUTMENT

HALF PLAN AT PIER

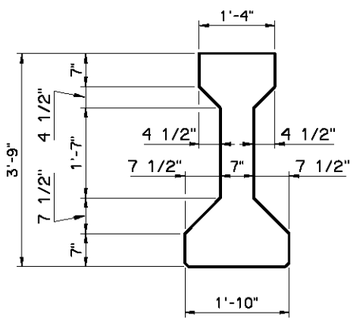

END VIEW

(Type III P.C.B.)

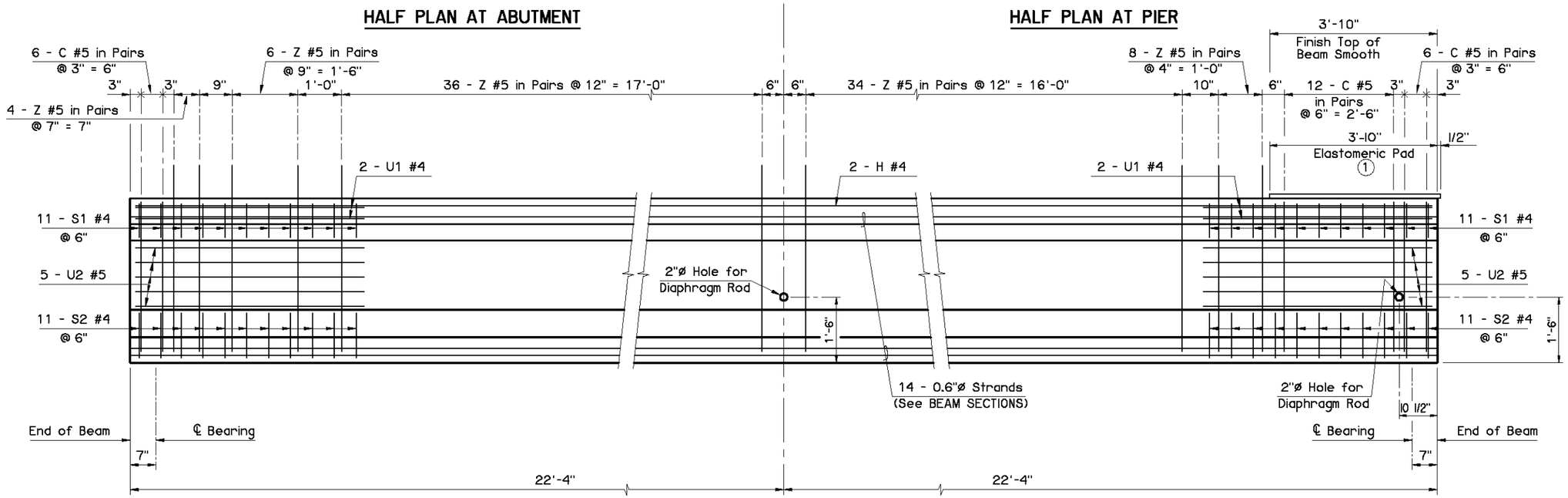

HALF ELEVATION AT ABUTMENT

HALF ELEVATION AT PIER

1 Provide Elastomeric Pad with a 50 durometer hardness and consisting of a single layer 5/8" thick x 1'-4" wide x 3'-10 1/2" long. Extend pad 1/2" beyond the end of the beam as shown.

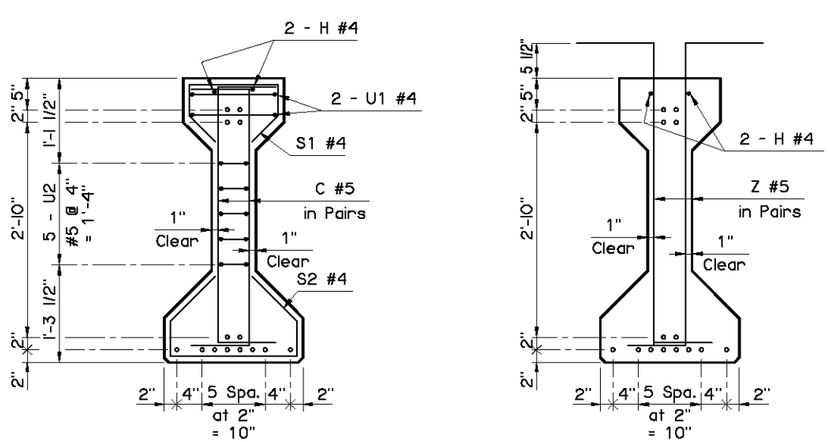

END SECTION

℄ SECTION

BEAM SECTIONS

(14 - 0.6"ø STRANDS)

PRESTRESSED CONCRETE BEAM NOTES

COMPRESSIVE STRENGTH
Provide concrete with a compressive strength of 4,500 p.s.i. at transfer of prestress and 6,000 p.s.i. at 28 days.

STRAND TYPE
Provide low-relaxation strands having a nominal diameter of 0.6" with ultimate tensile strength of 270 k.s.i.

LFD OPERATING RATING - HS 38.3
The Operating Rating shown is based on a nominal strength using only strands that are bonded for the full length of the beam. All partially bonded strands are neglected in strength computations.

Information shown on this sheet is applicable only to the standard bridge cross-section with 40' Clear Roadway, 8" Deck Slab and 4 Beams at 11'-4" spacing. Any deviation requires custom design and details with an appropriate Dead Load Deflection Diagram.

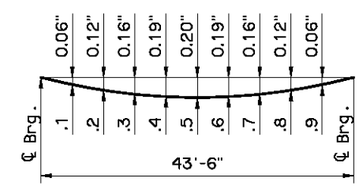

DEAD LOAD DEFLECTION DIAGRAM

NOTE:
The Dead Load Deflection shown above at the tenth points are the initial deflections due to Deck Slab + Diaphragms + Haunch + S.I.P. Steel Deck Form Allowance + Concrete Traffic Rail. It does not include the Beam weight or Future Wearing Surface.

APPROVED BY BRIDGE ENGINEER [signature] DATE 7/2/10

OKLAHOMA DEPT. OF TRANSPORTATION
BRIDGE STANDARD (ENGLISH)

TYPE III P.C. BEAM DETAILS
45' SPAN
INTEGRAL

2009 SPECIFICATIONS	B40-I-PCB-III-45	02E

B-89E