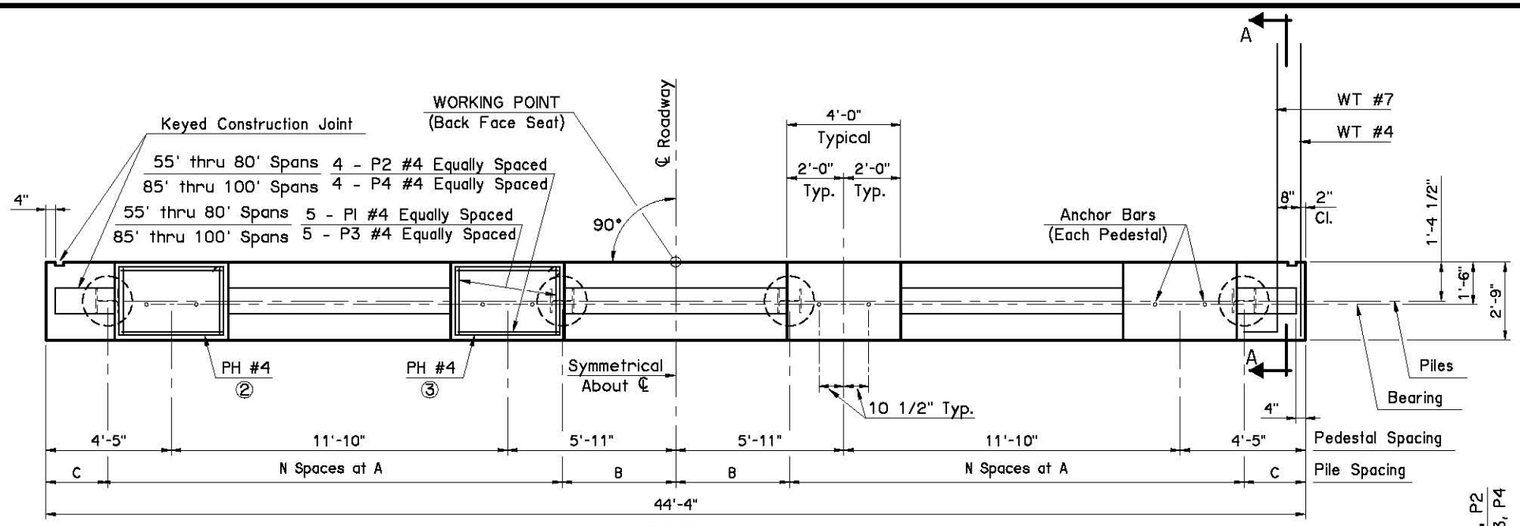

PLAN

② One Required at 55' and 60' Spans
None Required at 65' thru 100' Spans

③ One Required at 55' thru 80' Spans
None Required at 85' thru 100' Spans

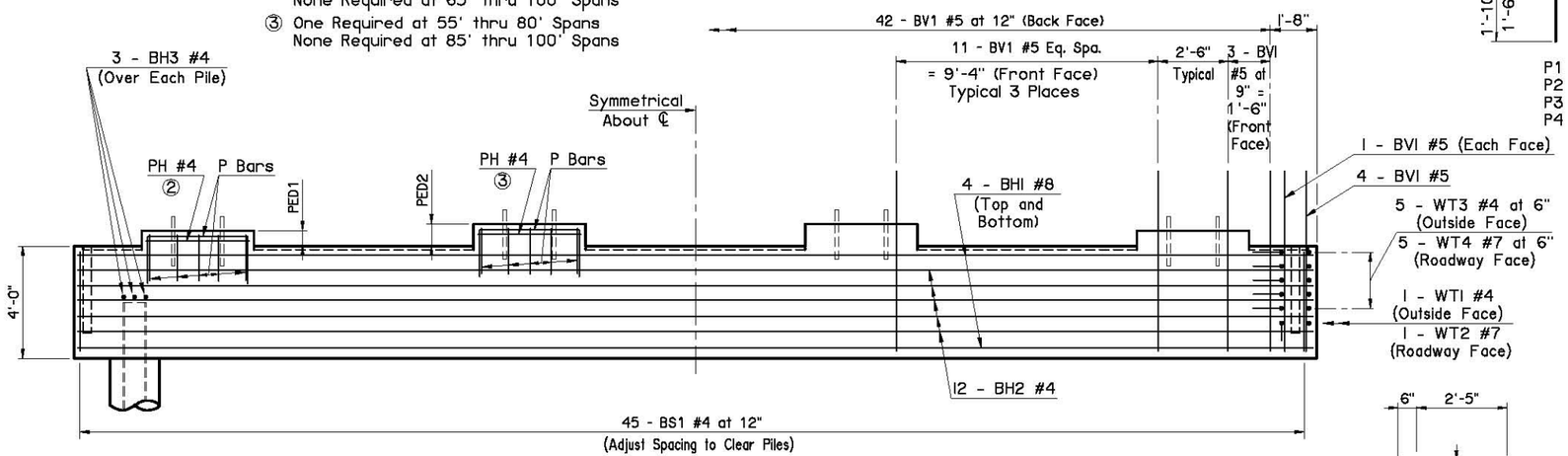

ELEVATION

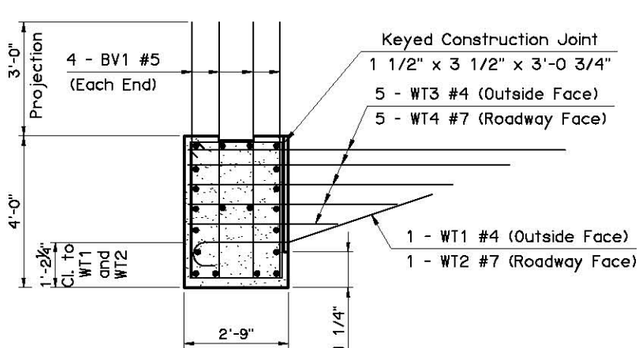

SECTION A-A

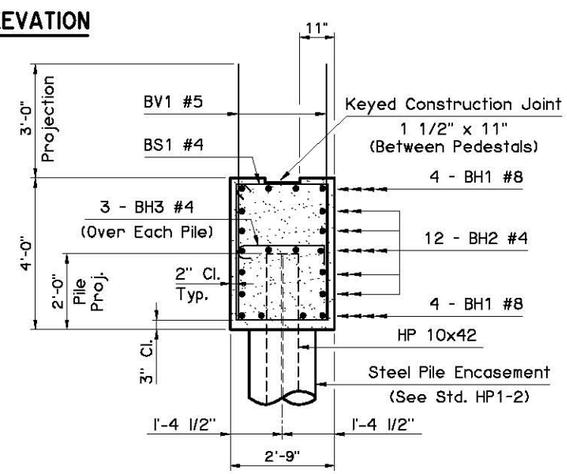

TYPICAL SECTION THRU SEAT

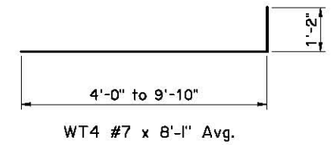

WT4 #7 x 8'-1" Avg.

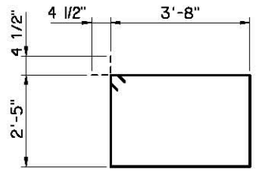

PH #4 x 12'-11"

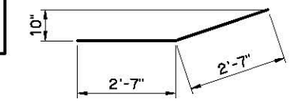

WT1 #4 x 5'-2"

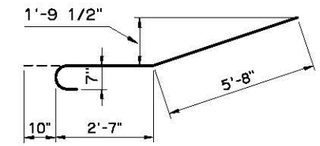

WT2 #7 x 9'-1"

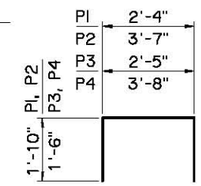

P1 #4 x 6'-0"
P2 #4 x 7'-3"
P3 #4 x 5'-5"
P4 #4 x 6'-8"

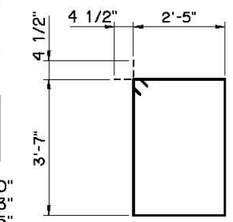

BS1 #4 x 12'-9"

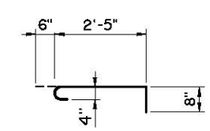

BH3 #4 x 3'-7"

Place all WT Wing reinforcing tied to Abutment Seat reinforcing before placing Abutment Seat concrete. Do not place Abutment Wing concrete until concrete for the Abutment Diaphragm and Deck Slab have attained a strength of 3000 p.s.i. For additional details, see ABUTMENT DIAPHRAGM DETAILS (SHEET 1 OF 2 AND SHEET 2 OF 2) and ABUTMENT WING DETAILS (SHEET 2 OF 2).

PEDESTAL SCHEDULE

SPAN	PED1	PED2
55'	6 5/8"	9 1/2"
60'	6 1/4"	9 1/8"
65'	3 1/2"	6 3/8"
70'	3 1/8"	6"
75'	3 1/2"	6 3/8"
80'	3 1/8"	6"
85'	2 3/4"	5 5/8"
90'	2 3/8"	5 1/4"
95'	2 1/4"	5 1/8"
100'	2"	4 7/8"

PILE SCHEDULE

SPAN	TOTAL NUMBER OF PILES	N	A	B	C	MAXIMUM FACTORED PILE LOAD
55'	7	3	6'-9"	0"	1'-11"	67.9 TON
60'	7	3	6'-9"	0"	1'-11"	70.6 TON
65'	8	3	5'-8"	2'-10"	2'-4"	64.2 TON
70'	8	3	5'-8"	2'-10"	2'-4"	66.5 TON
75'	9	4	5'-0"	0"	2'-2"	61.2 TON
80'	9	4	5'-0"	0"	2'-2"	63.3 TON
85'	9	4	5'-0"	0"	2'-2"	65.6 TON
90'	9	4	5'-0"	0"	2'-2"	67.8 TON
95'	10	4	4'-6"	2'-3"	1'-11"	63.0 TON
100'	10	4	4'-6"	2'-3"	1'-11"	65.0 TON

ABUTMENT SEAT BAR LIST

MARK	SIZE	NO.	FORM	LENGTH	LENGTH VARIATION
EPOXY COATED REINFORCING					
BV1	#5	93	STR.	6'-9"	
BH1	#8	8	STR.	44'-0"	
BH2	#4	12	STR.	44'-0"	
BS1	#4	45	BNT.	12'-9"	
WT1	#4	2	BNT.	5'-2"	
WT2	#7	2	BNT.	9'-1"	
① WT3	#4	10	STR.	6'-11" AVG.	4'-0" to 9'-10"
① WT4	#7	10	BNT.	8'-1" AVG.	5'-2" to 11'-0"
7 PILE ABUTMENT					
BH3	#4	21	BNT.	3'-7"	
8 PILE ABUTMENT					
BH3	#4	24	BNT.	3'-7"	
9 PILE ABUTMENT					
BH3	#4	27	BNT.	3'-7"	
10 PILE ABUTMENT					
BH3	#4	30	BNT.	3'-7"	
55' AND 60' SPANS					
P1	#4	20	BNT.	6'-0"	
P2	#4	16	BNT.	7'-3"	
PH	#4	4	BNT.	12'-11"	
65' THRU 80' SPANS					
P1	#4	20	BNT.	6'-0"	
P2	#4	16	BNT.	7'-3"	
PH	#4	2	BNT.	12'-11"	
85' THRU 100' SPANS					
P3	#4	20	BNT.	5'-5"	
P4	#4	16	BNT.	6'-8"	

① 2 Sets of 5

APPROVED BY BRIDGE ENGINEER [signature] DATE 4/2/10

OKLAHOMA DEPT. OF TRANSPORTATION
BRIDGE STANDARD (ENGLISH)

ABUTMENT DETAILS
55' THRU 100' ROLLED BEAM SPANS
INTEGRAL (SHEET 1 OF 2)

2009 SPECIFICATIONS | B40-I-ABUT-RB-55100-1 | 02E

B-50E