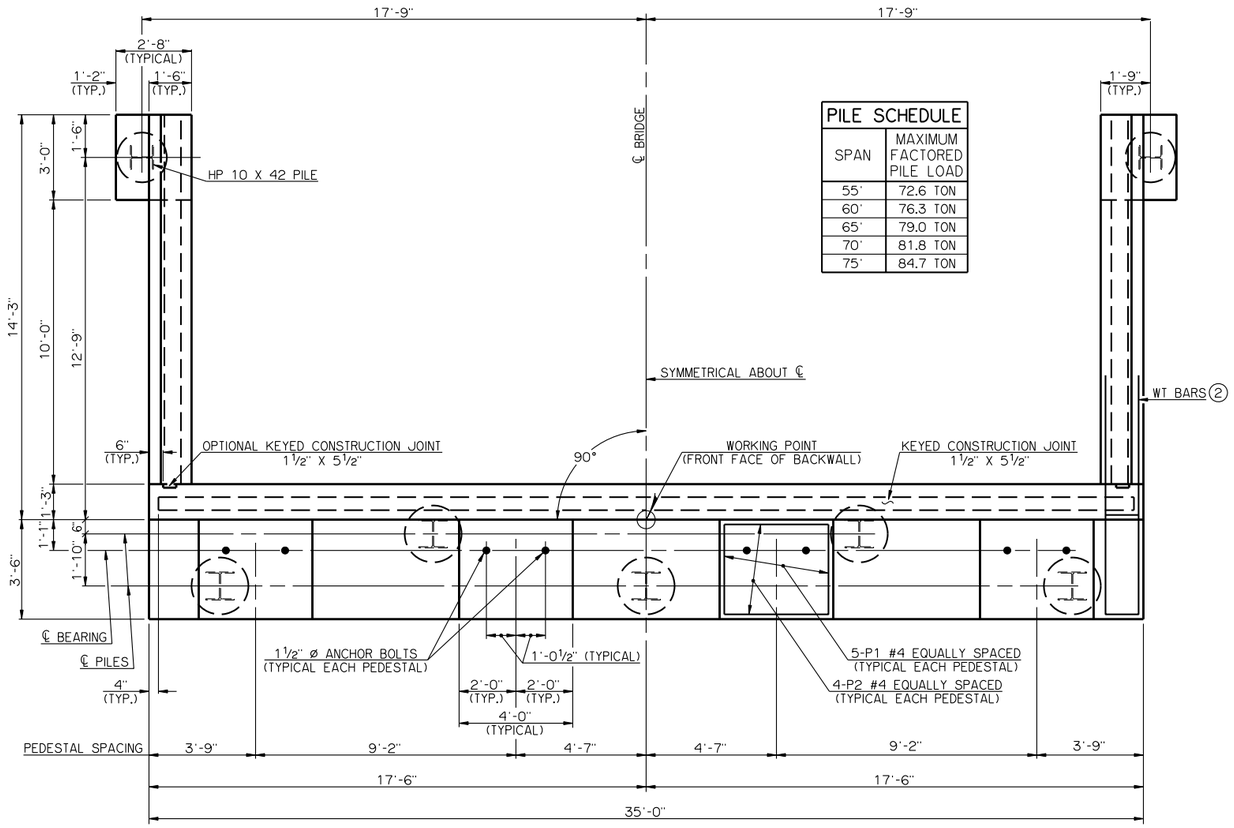

PLAN

PILE SCHEDULE	
SPAN	MAXIMUM FACTORED PILE LOAD
55'	72.6 TON
60'	76.3 TON
65'	79.0 TON
70'	81.8 TON
75'	84.7 TON

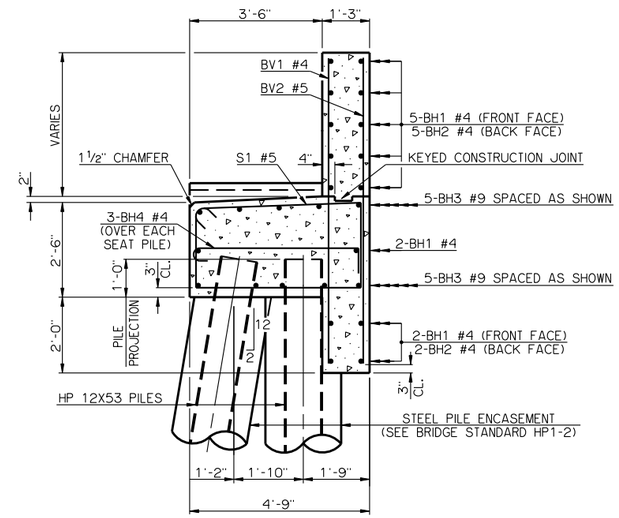

TYPICAL SECTION THRU ABUTMENT

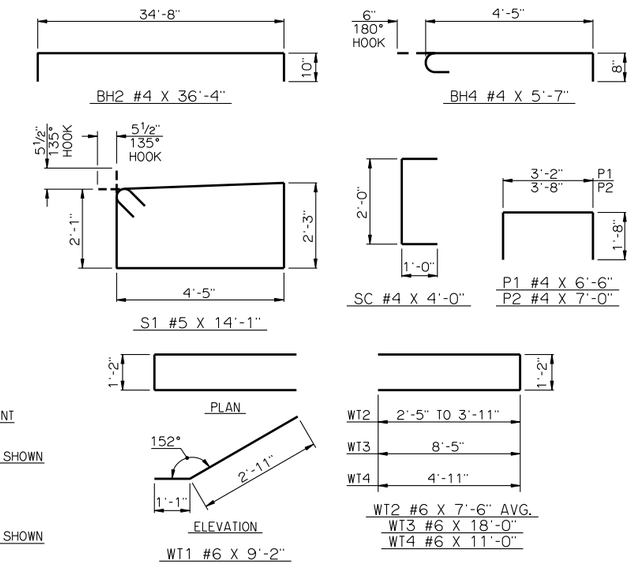

DETAILS OF BENT REINFORCING STEEL

BAR LIST - ONE ABUTMENT					
MARK	NO.	SIZE	FORM	LENGTH	LENGTH VARIATION
BH1	9	#4	STR.	34'-8"	-
BH2	7	#4	BNT.	36'-4"	-
BH3	10	#9	STR.	34'-8"	-
BH4	15	#4	BNT.	5'-7"	-
(3) BV1	36	#4	STR.	7'-10" AVG.	7'-8" TO 8'-0"
(3) BV2	36	#5	STR.	7'-10" AVG.	7'-8" TO 8'-0"
P1	20	#4	BNT.	6'-6"	-
P2	16	#4	BNT.	7'-0"	-
S1	38	#5	BNT.	14'-1"	-
SC	6	#4	BNT.	4'-0"	-
WT1	2	#6	BNT.	9'-2"	-
(4) WT2	4	#6	BNT.	7'-6" AVG.	6'-0" TO 9'-0"
WT3	8	#6	BNT.	18'-0"	-
WT4	10	#6	BNT.	11'-0"	-

(3) NO. INCLUDES TWO SETS OF 18 BARS
(4) NO. INCLUDES TWO SETS OF 2 BARS

PEDESTAL DIMENSIONS		
SPAN	P1	P2
55'	10 9/16"	12¾"
60'	7½"	9 11/16"
65'	5 1/16"	7¼"
70'	4¾"	6 15/16"
75'	2"	4 3/16"

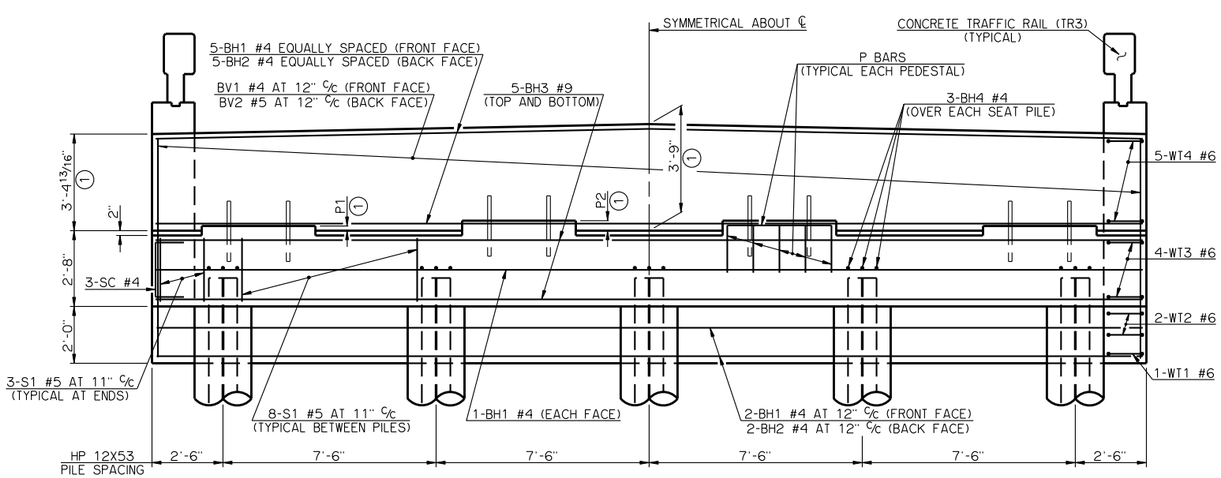

ELEVATION

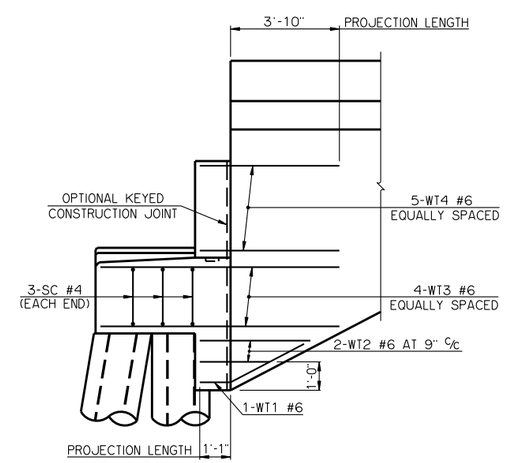

SIDE VIEW

SUMMARY OF QUANTITIES - ONE ABUTMENT (5)		
ITEM	UNIT	TOTAL
SUBSTRUCTURE EXCAVATION, COMMON	CY	70.00
GRANULAR BACKFILL	CY	39.00
CLASS A CONCRETE	CY	27.40
REINFORCING STEEL	LB	3,290.00
PILES, FURNISHED (HP 12X53)	LF	-
PILES, DRIVEN (HP 12X53)	LF	-
6" PERFORATED PIPE UNDERDRAIN	LF	32.00
6" NON-PERFORATED PIPE UNDERDRAIN	LF	-

(5) EXCLUDES WINGS

(1) DIMENSIONS ARE FROM TOP OF BRIDGE SEAT AT FRONT FACE OF BACKWALL.

(2) ALL WT WING REINFORCING STEEL TIED TO THE ABUTMENT BRIDGE SEAT, BACKWALL AND CURTAIN WALL REINFORCING STEEL MUST BE IN PLACE PRIOR TO POURING ABUTMENT CONCRETE. FOR ADDITIONAL INFORMATION SEE WING DETAILS.

APPROVED BY BRIDGE ENGINEER Robert J Dick DATE 10-31-2011

OKLAHOMA DEPARTMENT OF TRANSPORTATION
COUNTY BRIDGE STANDARD (ENGLISH)

ABUTMENT DETAILS
55' THRU 75' ROLLED BEAMS

32' CLEAR ROADWAY - CONVENTIONAL - SKEWED 0°

2009 SPECIFICATIONS | CB32-C-SK0-ABUT-RB-5575 | 02E

CB-529E