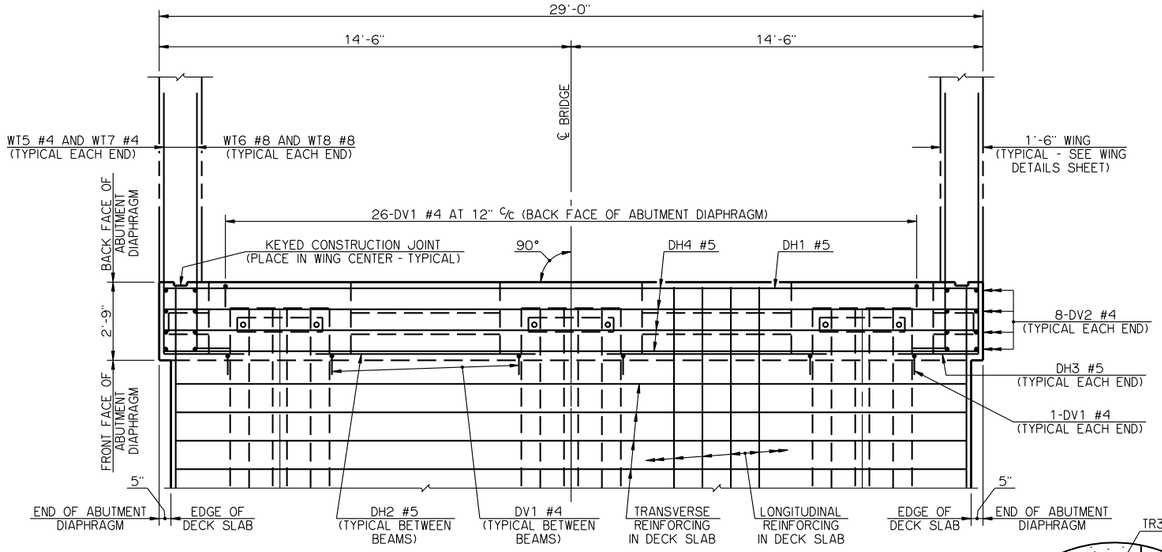

PLAN

② THE AS BARS AND THE APPROACH SLAB SUPPORT ARE TO BE CONSTRUCTED ONLY IF THE BRIDGE CONTAINS THE OPTIONAL APPROACH SLABS. THE AS BARS IN THE DECK SLAB AND THE BT1 AND SV1 BARS IN THE APPROACH SLAB SUPPORT SHALL BE INSTALLED BEFORE PLACING THE ABUTMENT DIAPHRAGM AND DECK SLAB CONCRETE. FOR ADDITIONAL DETAILS AND INFORMATION SEE APPROACH SLAB DETAILS.

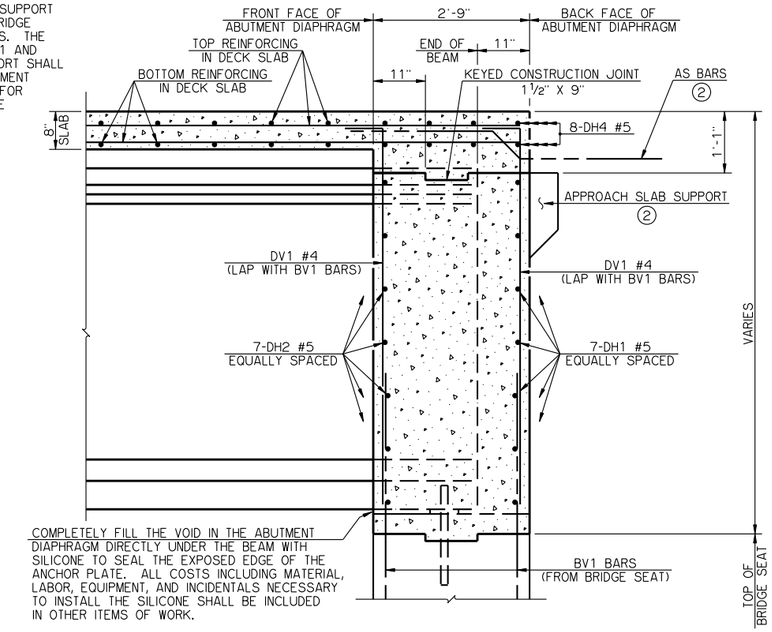

TYPICAL SECTION THRU ABUTMENT DIAPHRAGM

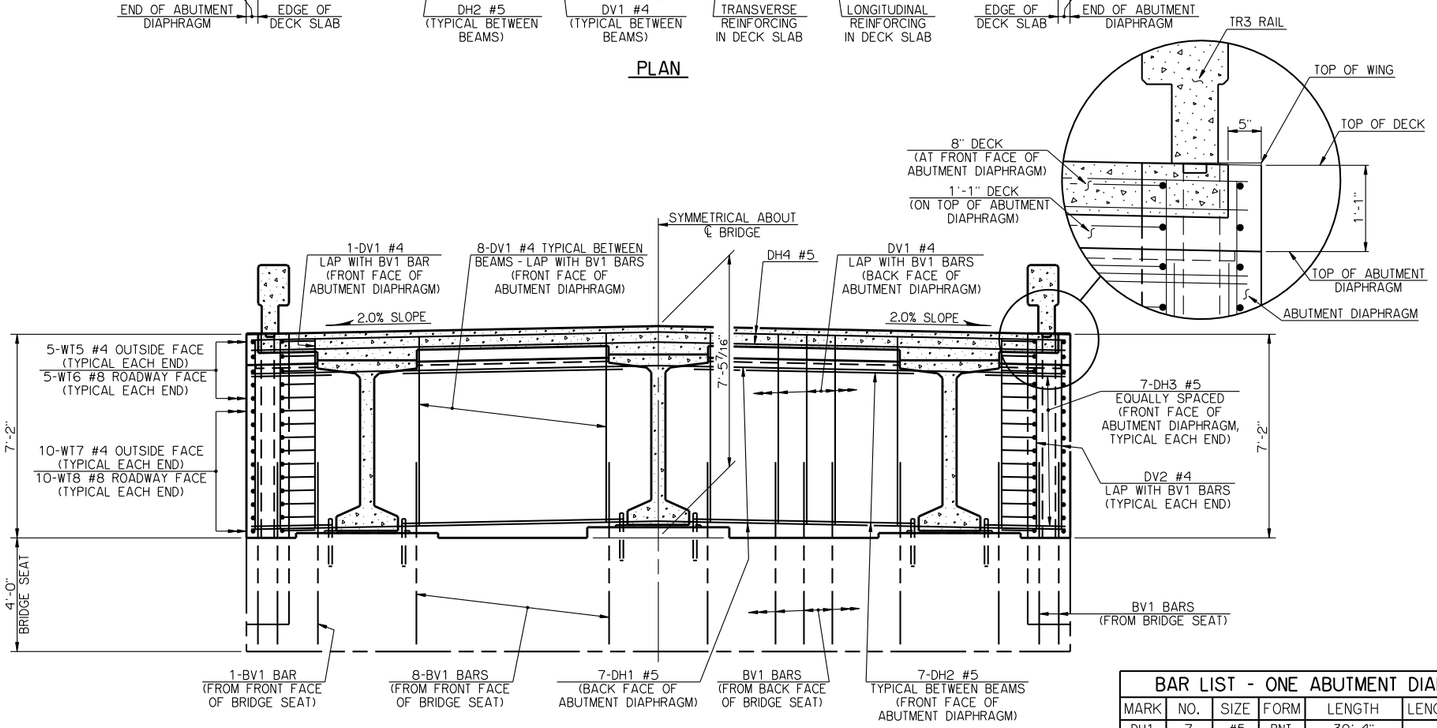

ELEVATION

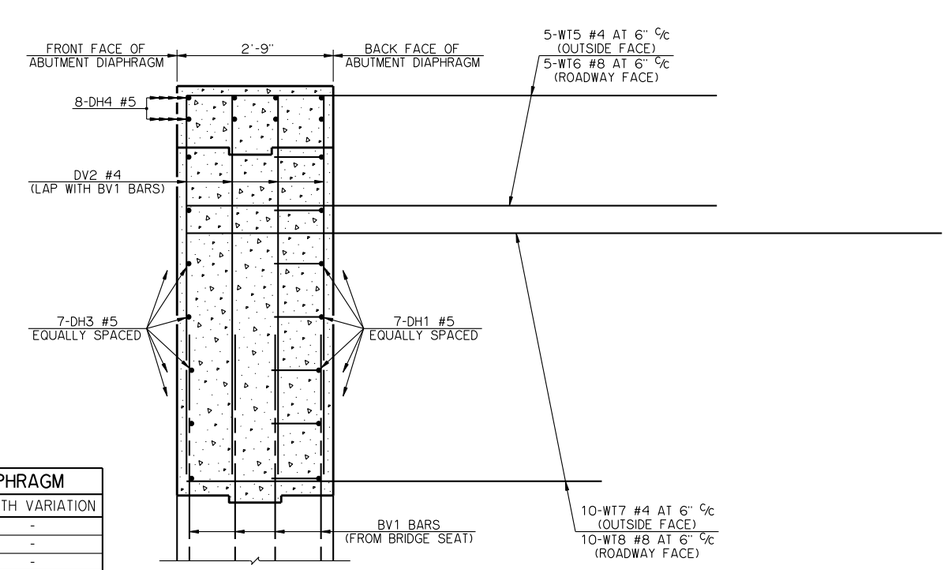

TYPICAL SECTION THRU ABUTMENT DIAPHRAGM AT WING

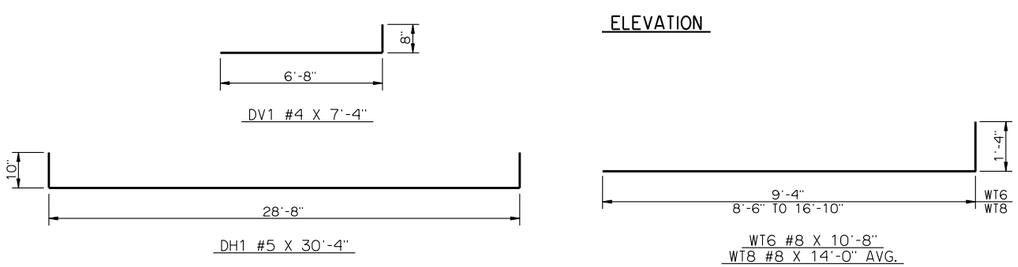

DETAILS OF BENT REINFORCING STEEL

BAR LIST - ONE ABUTMENT DIAPHRAGM						
	MARK	NO.	SIZE	FORM	LENGTH	LENGTH VARIATION
	DH1	7	#5	BNT.	30'-4"	-
	DH2	14	#5	STR.	7'-9"	-
	DH3	14	#5	STR.	2'-10"	-
	DH4	8	#5	STR.	28'-8"	-
	DV1	44	#4	BNT.	7'-4"	-
	DV2	16	#4	STR.	6'-8"	-
	WT5	10	#4	STR.	9'-4"	-
	WT6	10	#8	BNT.	10'-8"	-
①	WT7	20	#4	STR.	12'-8" AVG.	8'-6" TO 16'-10"
①	WT8	20	#8	BNT.	14'-0" AVG.	9'-10" TO 18'-2"

① NO. INCLUDES TWO SETS OF 10 BARS

NOTES

DECK SLAB CONCRETE SHALL NOT BE POURED UNTIL THE ABUTMENT DIAPHRAGMS HAVE ATTAINED A STRENGTH OF 3,000 PSI.

ALL WT WING REINFORCING STEEL TIED TO ABUTMENT DIAPHRAGM REINFORCING STEEL MUST BE IN PLACE PRIOR TO POURING THE ABUTMENT DIAPHRAGM CONCRETE.

APPROVED BY BRIDGE ENGINEER Robert J Dwyer DATE 9-9-2011

OKLAHOMA DEPARTMENT OF TRANSPORTATION
COUNTY BRIDGE STANDARD (ENGLISH)

ABUTMENT DIAPHRAGM DETAILS
TYPE BT-72 AND TYPE J P.C. BEAMS

26' CLEAR ROADWAY - INTEGRAL - SKEWED 0°

2009 SPECIFICATIONS | CB26-I-SKO-DIA-ABUT-PC5 | 01E

CB-488E