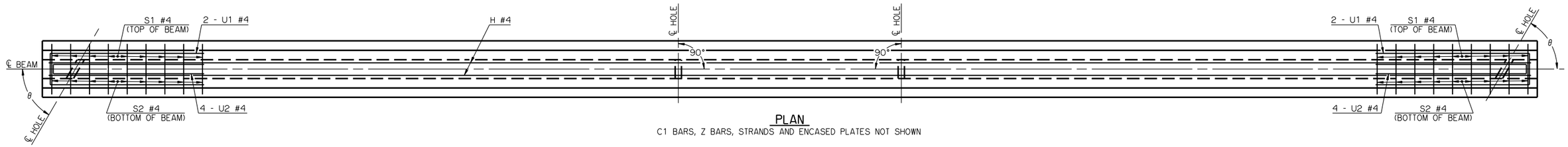

PLAN

C1 BARS, Z BARS, STRANDS AND ENCASED PLATES NOT SHOWN

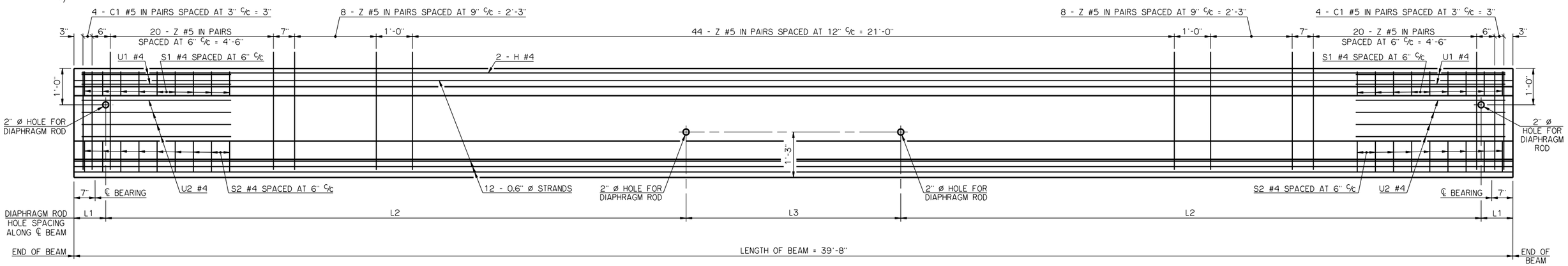

ELEVATION

ENCASED PLATES NOT SHOWN

DIAPHRAGM ROD HOLE SCHEDULE				
BRIDGE SKEW	θ	L1	L2	L3
0°	90°	10½"	18'-11½"	0'-0"
30° LEFT FORWARD	60°	1'-0"	15'-10½"	5'-11"
30° RIGHT FORWARD	120°	1'-0"	15'-10½"	5'-11"

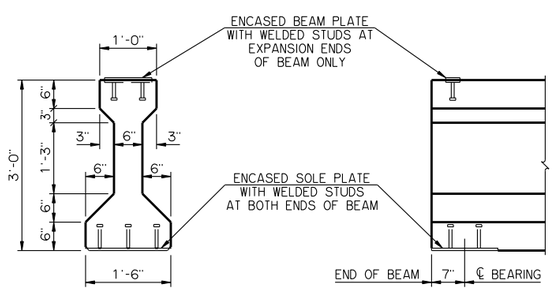

END VIEW

END ELEVATION

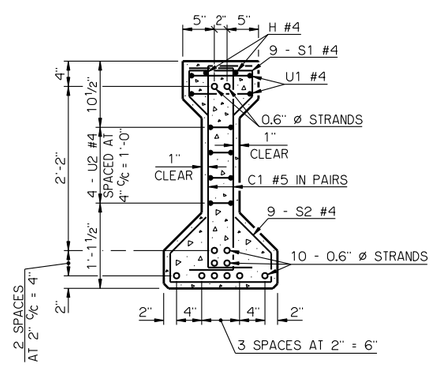

END SECTION

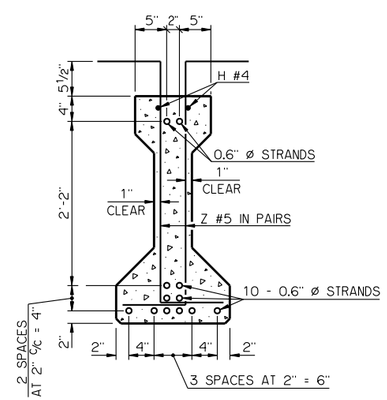

℄ SECTION

BEAM SECTIONS
(12 - 0.6" ø STRANDS)

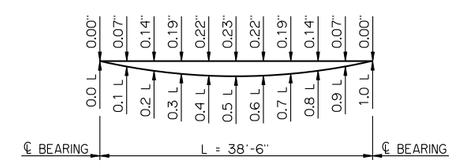

DEAD LOAD DEFLECTIONS

THE DEAD LOAD DEFLECTIONS SHOWN ABOVE AT THE TENTH POINTS ARE THE INITIAL THEORETICAL BEAM DEFLECTIONS DUE TO THE DIAPHRAGMS, A 5 PSF STEEL SIP FORMS ALLOWANCE, DECK SLAB, HAUNCH AND CONCRETE TRAFFIC RAIL (TR3). THE DEAD LOAD DEFLECTIONS SHALL BE ACCOUNTED FOR IN THE HAUNCH DEPTH CALCULATIONS.

MATERIAL PROPERTIES

THE COMPRESSIVE STRENGTH OF THE CONCRETE IN THE P.C. BEAM SHALL BE NO LESS THAN 4,500 PSI AT THE TIME OF TRANSFER OF THE PRESTRESSING FORCE AND NO LESS THAN 6,000 PSI AT 28 DAYS AFTER THE POURING OF THE CONCRETE.

THE TYPE OF PRESTRESSING STRANDS REQUIRED IN THE P.C. BEAM SHALL BE LOW RELAXATION 7-WIRE STRAND WITH A NOMINAL DIAMETER OF 0.6 INCHES AND AN ULTIMATE TENSILE STRENGTH OF 270 KSI.

LFD OPERATING RATING - HS 31.6

THE LFD OPERATING RATING SHOWN ABOVE IS FOR THE P.C. BEAM ONLY AND APPLIES ONLY TO THE P.C. BEAMS OF A BRIDGE CONSTRUCTED IN STRICT CONFORMANCE TO ALL RELEVANT DETAILS CONTAINED IN THE COMPLETE SET OF COUNTY BRIDGE STANDARDS AND TO THE ODOT STANDARD SPECIFICATIONS.

APPROVED BY BRIDGE ENGINEER Robert J Lusch DATE 9-9-2011

OKLAHOMA DEPARTMENT OF TRANSPORTATION
COUNTY BRIDGE STANDARD (ENGLISH)

P.C. BEAM DETAILS
TYPE II - 40' SPAN

26' CLEAR ROADWAY - CONVENTIONAL - SKEWED 0° AND 30°

2009 SPECIFICATIONS	CB26-C-SK0..30-PCB-II-40	01E

CB-261E