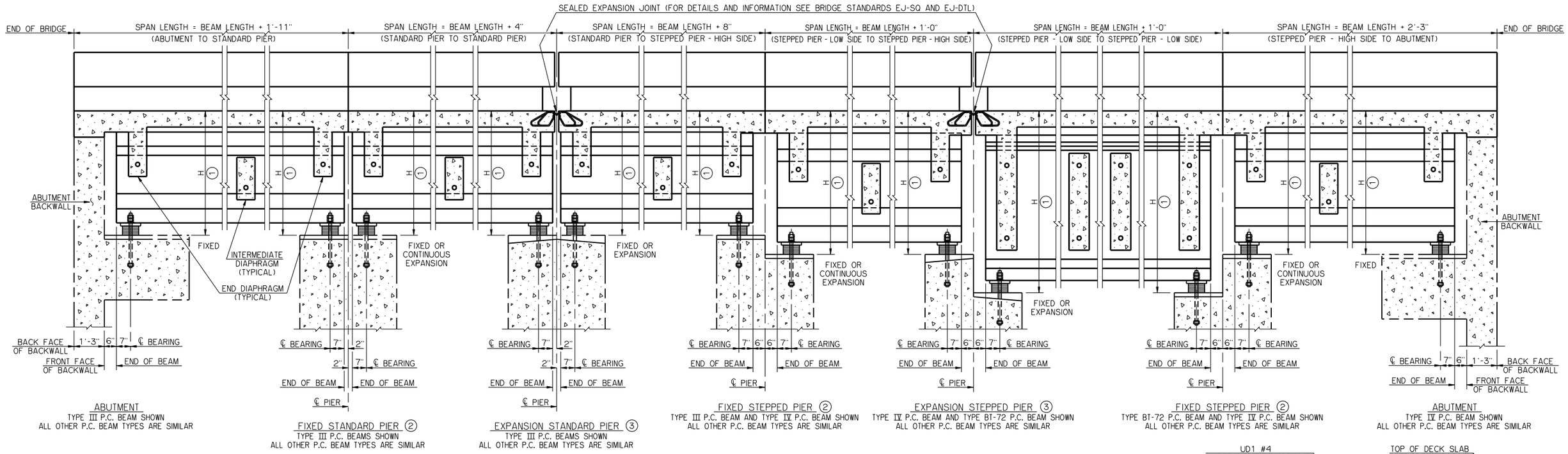

LONGITUDINAL SECTION

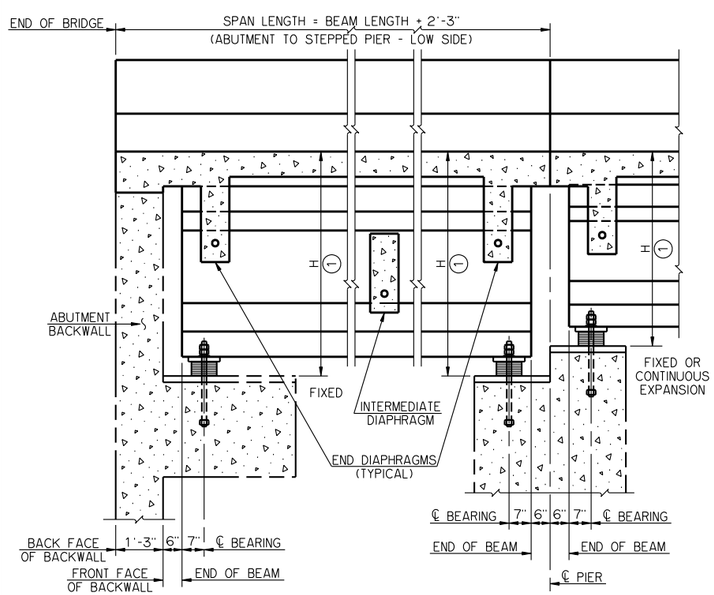

LONGITUDINAL SECTION

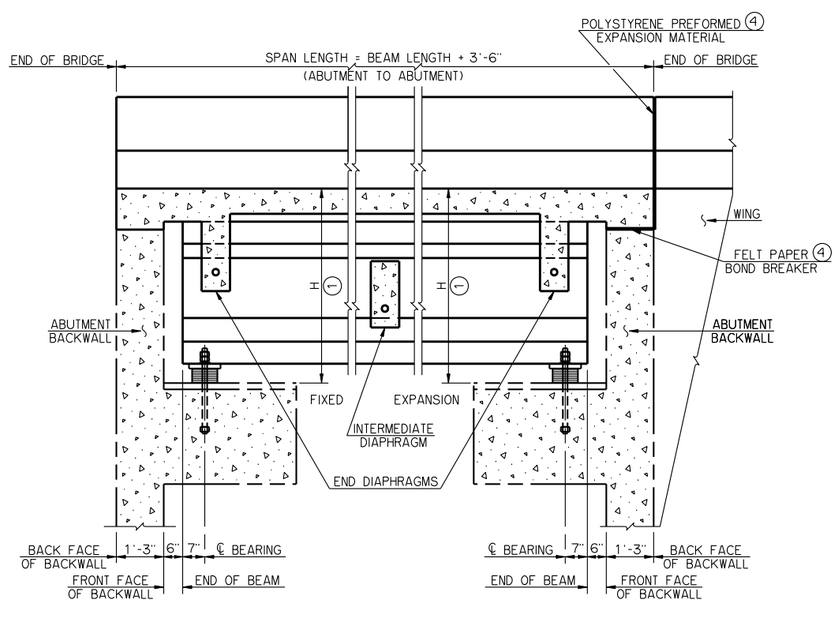

LONGITUDINAL SECTION

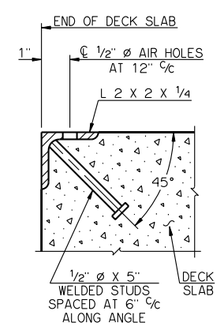

DETAIL OF STEEL ANGLE BUMPER

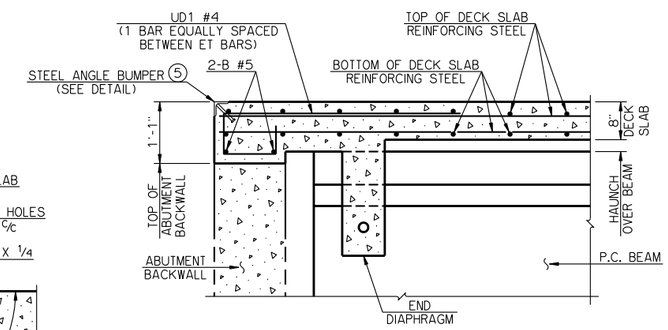

TYPICAL DECK SLAB DETAILS AT ABUTMENTS

SCHEDULE FOR DIMENSION H	
P.C. BEAM	H
TYPE II	4'-3 1/8"
TYPE B	4'-1 1/8"
TYPE III	5'-0 1/8"
TYPE C	4'-7 1/8"
TYPE IV	5'-9 5/8"
TYPE BT-72	7'-4 5/8"
TYPE J	7'-5 1/8"

1. DIMENSION IS FROM TOP OF DECK SLAB TO BOTTOM OF BEARING ASSEMBLY AT ℄ BEARING.
2. FIXED PIER DESIGNATION INDICATES CONTINUOUS DECK SLAB OVER PIER. ENGINEER SHALL DETERMINE WHETHER FIXED OR EXPANSION BEARING ASSEMBLIES ARE REQUIRED.
3. EXPANSION PIER DESIGNATION INDICATES EXPANSION JOINT IN DECK SLAB OVER PIER. EXPANSION PIER REQUIRES EXPANSION BEARING ASSEMBLIES IN AT LEAST ONE OF THE SPANS. ENGINEER SHALL DETERMINE WHETHER FIXED OR EXPANSION BEARING ASSEMBLIES ARE REQUIRED IN THE ADJACENT SPAN.
4. AT EXPANSION ABUTMENTS, FELT PAPER BOND BREAKER SHALL BE PLACED ON TOP OF THE BACKWALL FOR THE FULL WIDTH OF THE DECK SLAB, AND 3/4" THICK POLYSTYRENE PREFORMED EXPANSION MATERIAL SHALL BE PLACED BETWEEN THE END OF THE DECK SLAB AND THE ENDS OF THE WINGS AND BETWEEN THE ENDS OF THE CONCRETE TRAFFIC RAILS (TR3) ON THE DECK SLAB AND WINGS. ALL COST TO BE INCLUDED IN OTHER ITEMS OF WORK.
5. STEEL ANGLE BUMPERS SHALL BE OMITTED FROM ENDS OF DECK SLABS ADJOINING AN APPROACH ROADWAY COMPRISED OF ASPHALT OR P.C. CONCRETE PAVEMENT.

APPROVED BY BRIDGE ENGINEER Robert J Dick DATE 9-9-2011

OKLAHOMA DEPARTMENT OF TRANSPORTATION
COUNTY BRIDGE STANDARD (ENGLISH)

LONGITUDINAL SECTION
P.C. BEAMS

26' CLEAR ROADWAY - CONVENTIONAL - SKEWED 0°

2009 SPECIFICATIONS | CB26-C-SKO-LSECT-PCB | 01E

CB-169E