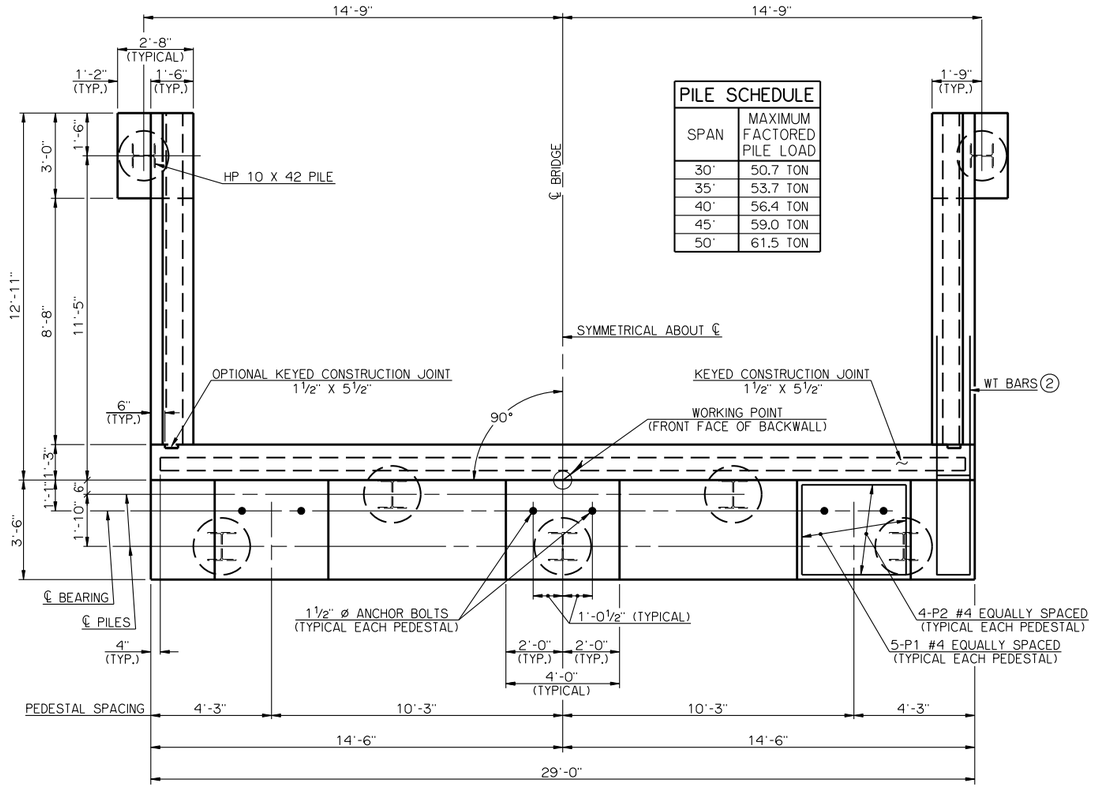

PLAN

PILE SCHEDULE	
SPAN	MAXIMUM FACTORED PILE LOAD
30'	50.7 TON
35'	53.7 TON
40'	56.4 TON
45'	59.0 TON
50'	61.5 TON

PEDESTAL DIMENSIONS		
SPAN	P1	P2
30'	7 15/16"	10 3/8"
35'	5 1/8"	7 9/16"
40'	2 5/16"	4 3/4"
45'	2 3/16"	4 5/8"
50'	2"	4 7/16"

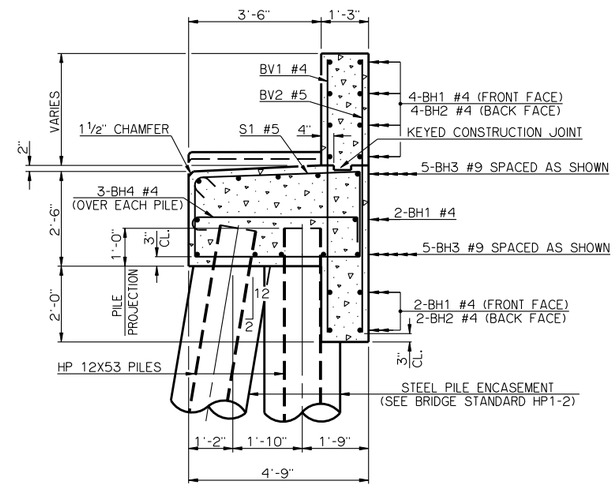

TYPICAL SECTION THRU ABUTMENT

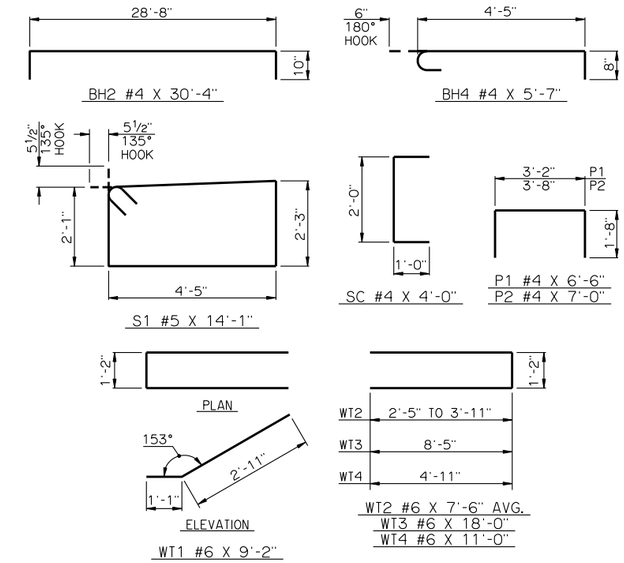

DETAILS OF BENT REINFORCING STEEL

BAR LIST - ONE ABUTMENT					
MARK	NO.	SIZE	FORM	LENGTH	LENGTH VARIATION
BH1	8	#4	STR.	28'-8"	-
BH2	6	#4	BNT.	30'-4"	-
BH3	10	#9	STR.	28'-8"	-
BH4	15	#4	BNT.	5'-7"	-
(3) BV1	30	#4	STR.	7'-1" AVG.	6'-11" TO 7'-3"
(3) BV2	30	#5	STR.	7'-1" AVG.	6'-11" TO 7'-3"
P1	15	#4	BNT.	6'-6"	-
P2	12	#4	BNT.	7'-0"	-
S1	30	#5	BNT.	14'-1"	-
SC	6	#4	BNT.	4'-0"	-
WT1	2	#6	BNT.	9'-2"	-
(4) WT2	4	#6	BNT.	7'-6" AVG.	6'-0" TO 9'-0"
WT3	8	#6	BNT.	18'-0"	-
WT4	8	#6	BNT.	11'-0"	-

(3) NO. INCLUDES TWO SETS OF 15 BARS
(4) NO. INCLUDES TWO SETS OF 2 BARS

SUMMARY OF QUANTITIES - ONE ABUTMENT (5)		
ITEM	UNIT	TOTAL
SUBSTRUCTURE EXCAVATION, COMMON	CY	55.00
GRANULAR BACKFILL	CY	26.00
CLASS A CONCRETE	CY	21.10
REINFORCING STEEL	LB	2,670.00
PILES, FURNISHED (HP 12X53)	LF	-
PILES, DRIVEN (HP 12X53)	LF	-
6" PERFORATED PIPE UNDERDRAIN	LF	26.00
6" NON-PERFORATED PIPE UNDERDRAIN	LF	-

(5) EXCLUDES WINGS

(1) DIMENSIONS ARE FROM TOP OF BRIDGE SEAT AT FRONT FACE OF BACKWALL.

(2) ALL WT WING REINFORCING STEEL TIED TO THE ABUTMENT BRIDGE SEAT, BACKWALL AND CURTAIN WALL REINFORCING STEEL MUST BE IN PLACE PRIOR TO POURING ABUTMENT CONCRETE. FOR ADDITIONAL INFORMATION SEE WING DETAILS.

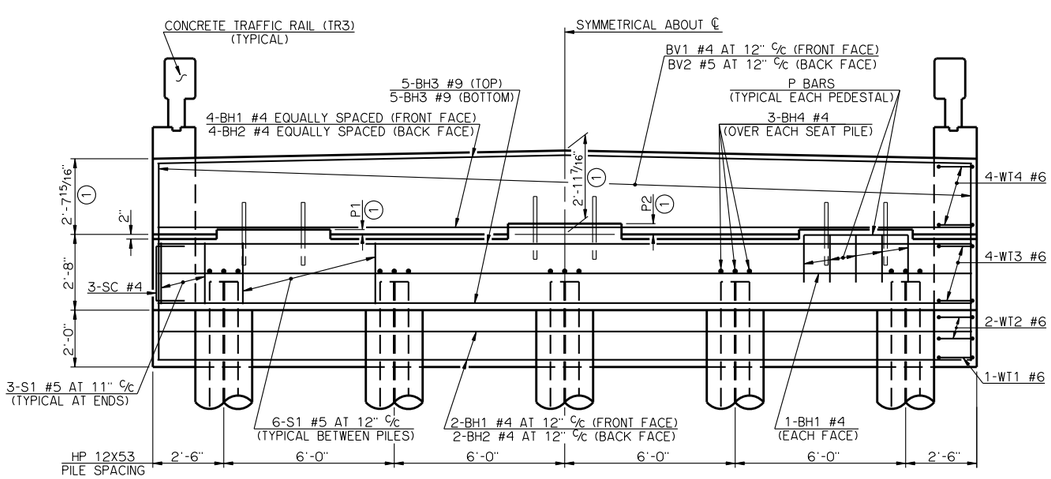

ELEVATION

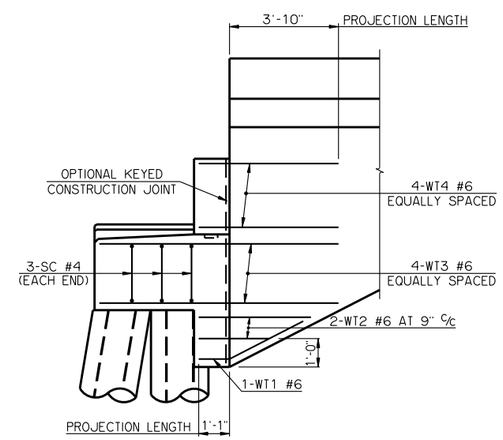

SIDE VIEW

APPROVED BY BRIDGE ENGINEER Robert J Busch DATE 10-31-2011

OKLAHOMA DEPARTMENT OF TRANSPORTATION
COUNTY BRIDGE STANDARD (ENGLISH)

ABUTMENT DETAILS
30' THRU 50' ROLLED BEAMS

26' CLEAR ROADWAY - CONVENTIONAL - SKEWED 0°

2009 SPECIFICATIONS | CB26-C-SK0-ABUT-RB-3050 | 02E

CB-154E