REVISIONS		
DESCRIPTION		DATE

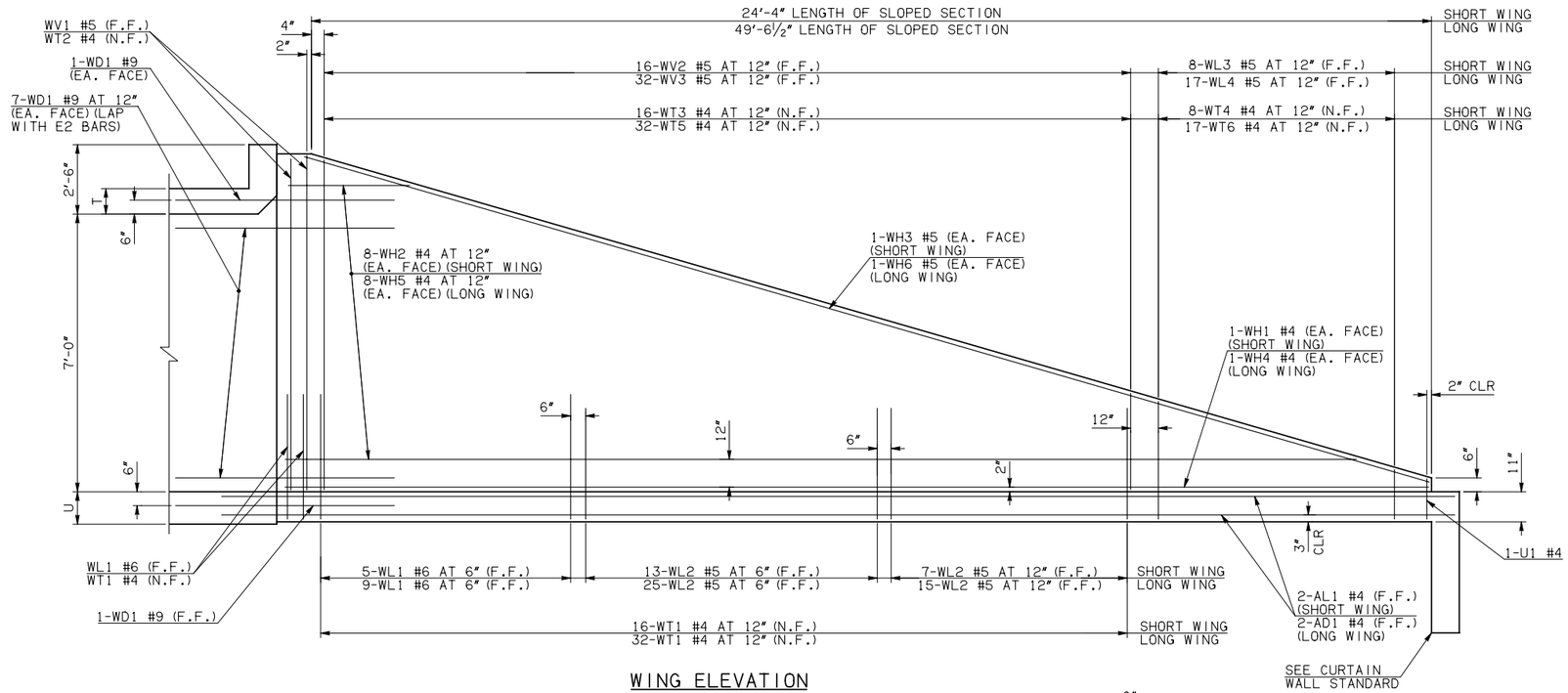

WING ELEVATION

NOTE: F.F. = FAR FACE
N.F. = NEAR FACE

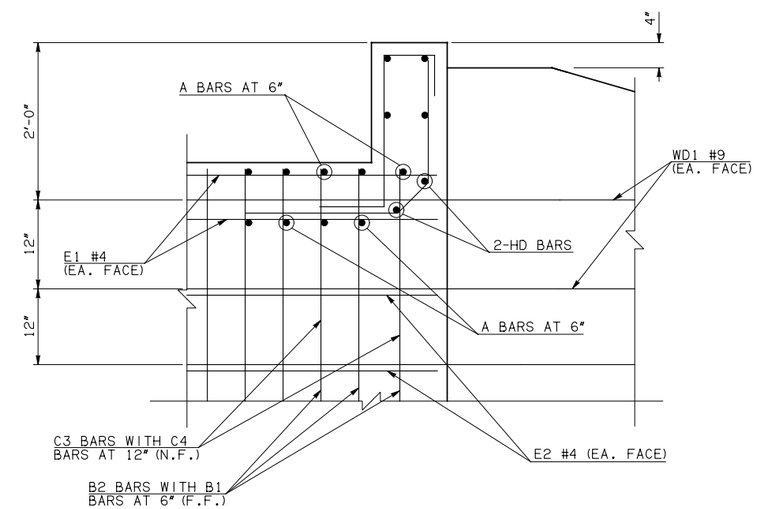

③ HEADWALL DETAIL AT EXTERIOR WALL

WINGWALL BAR LIST (LONG AND SHORT WING INCLUDED)					
MARK	SIZE	QTY.	FORM	LENGTH	REMARKS
WD1	#9	34	BNT	8'-4"	
WH1	#4	2	STR	25'-4"	
② WH2	#4	16	STR	13'-3" AVG.	3'-5" TO 23'-1"
WH3	#5	2	STR	25'-7"	
WH4	#4	2	STR	50'-6"	
② WH5	#4	16	STR	25'-10½" AVG.	5'-10" TO 45'-11"
WH6	#5	2	STR	50'-1"	
WL1	#6	18	BNT	12'-9"	
WL2	#5	60	BNT	10'-0"	
WL3	#5	8	BNT	4'-7" AVG.	3'-4" TO 5'-10"
WL4	#5	17	BNT	4'-7" AVG.	3'-2" TO 6'-0"
WT1	#4	53	STR	2'-10"	
WT2	#4	5	STR	9'-0"	
WT3	#4	16	STR	6'-2" AVG.	3'-6" TO 8'-10"
WT4	#4	8	STR	2'-7" AVG.	1'-4" TO 3'-10"
WT5	#4	32	STR	6'-2½" AVG.	3'-6" TO 8'-11"
WT6	#4	17	STR	2'-7" AVG.	1'-2" TO 4'-0"
WV1	#5	4	STR	9'-0"	
WV2	#5	16	STR	6'-2" AVG.	3'-6" TO 8'-10"
WV3	#5	32	STR	6'-2½" AVG.	3'-6" TO 8'-11"
U1	#4	2	BNT	2'-6"	

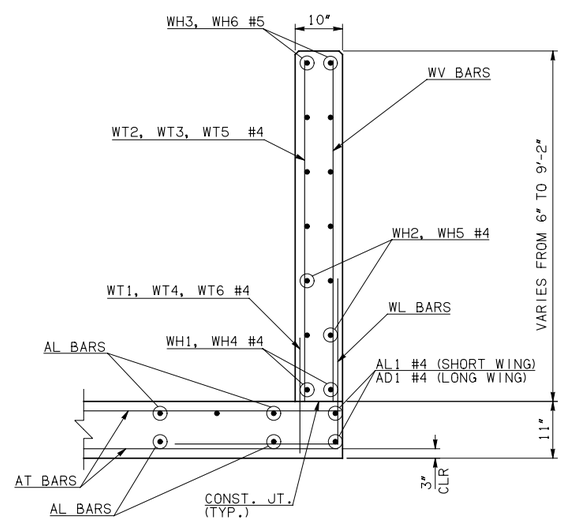

TYPICAL SECTION THRU WING

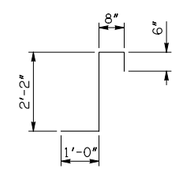

CL1 AT 4'-4"

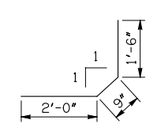

CL2 AT 4'-3"

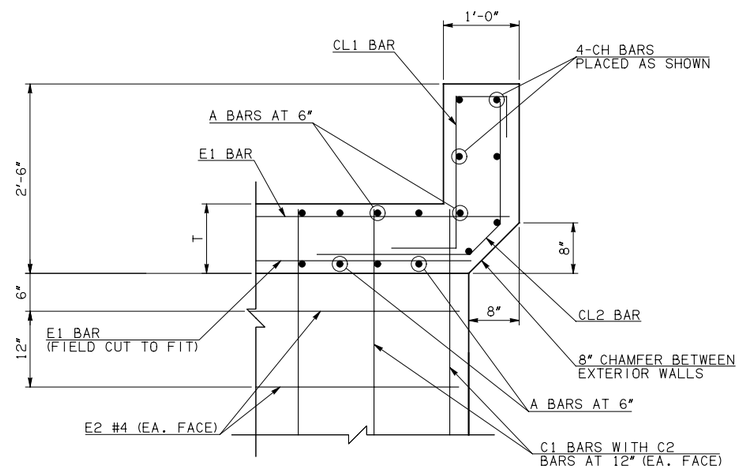

③ HEADWALL DETAIL AT INTERIOR WALL

DIMENSION SHOWN NORMAL TO HEADWALL

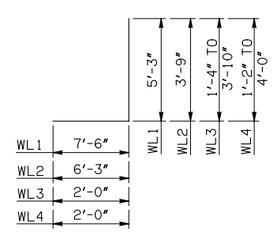

WL1 #6 x 12'-9"
WL2 #5 x 10'-0"
WL3 #5 x 4'-7" AVG.
WL4 #5 x 4'-7" AVG.

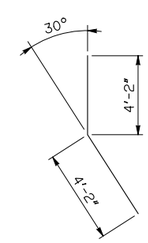

WD1 #9 x 8'-4"

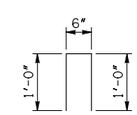

U1 #4 x 2'-6"

NOTES:

② QUANTITY SHOWN REPRESENTS TWO SETS.

③ FOR FURTHER INFORMATION REGARDING END SECTION BARS A, B, C, E1, AND E2, REFER TO RCB CULVERT - BARREL DETAILS.

HEADWALL BAR LIST													
ONE HEADWALL SHOWN													
MARK	FORM	8' SPAN			10' SPAN			12' SPAN			14' SPAN		
		SIZE	QTY.	LENGTH	SIZE	QTY.	LENGTH	SIZE	QTY.	LENGTH	SIZE	QTY.	LENGTH
CH	STR	#4	4	32'-6"	#6	4	39'-6"	#6	4	46'-5"	#6	4	53'-4"
CL1	BNT	#4	33	4'-4"	#5	40	4'-4"	#5	47	4'-4"	#5	54	4'-4"
CL2	BNT	#4	33	4'-3"	#5	40	4'-3"	#5	47	4'-3"	#5	54	4'-3"
HD	STR	#6	2	32'-6"	#8	2	39'-6"	#8	2	46'-5"	#8	2	53'-4"

APPROVED BY BRIDGE ENGINEER Robert J. Rusch DATE 4/09/09

OKLAHOMA DEPT. OF TRANSPORTATION
BRIDGE STANDARD (ENGLISH)

RCB CULVERTS - END SECTION DETAILS
TRIPLE CELL - 7'-0" HEIGHT - 30°

SHEET NO. 3 OF 3

1999 SPECIFICATIONS | RCB-E3-H7-30-3 | 00E
B-761E