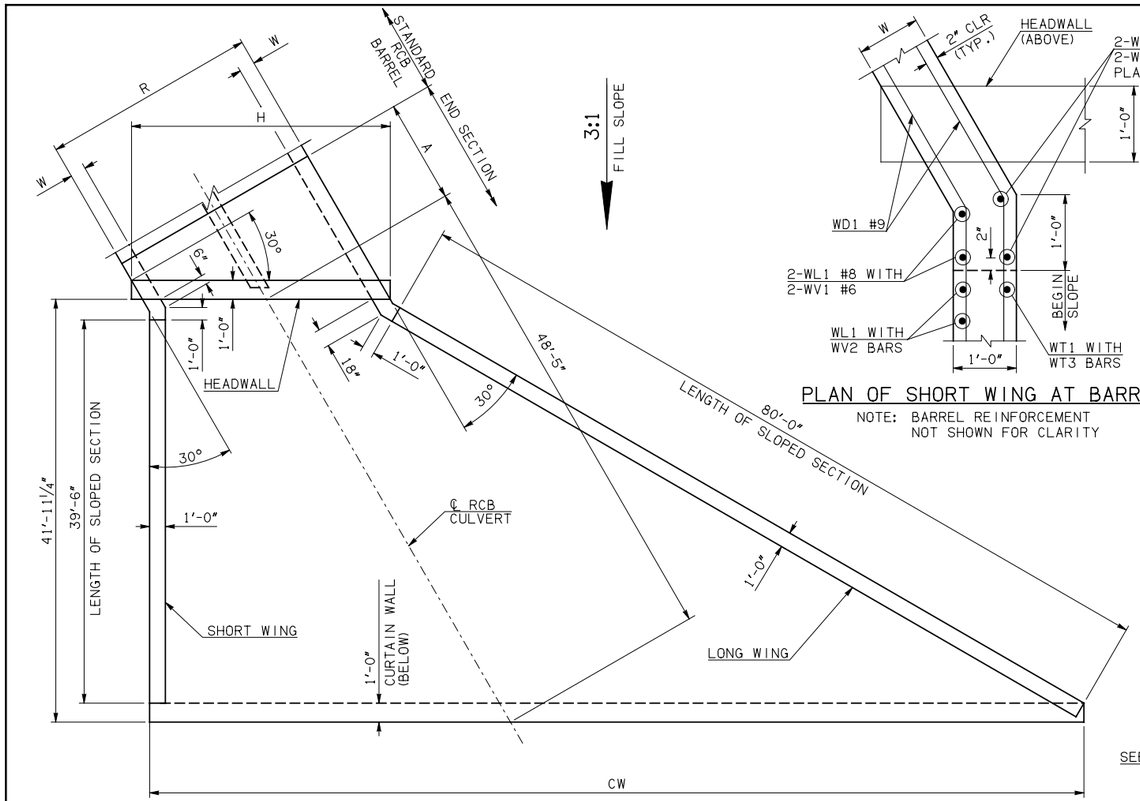

END SECTION PLAN

NOTE: SEE END SECTION DETAILS SHEET NO. 2 OF 3 FOR VARIABLE REINFORCING QUANTITIES.

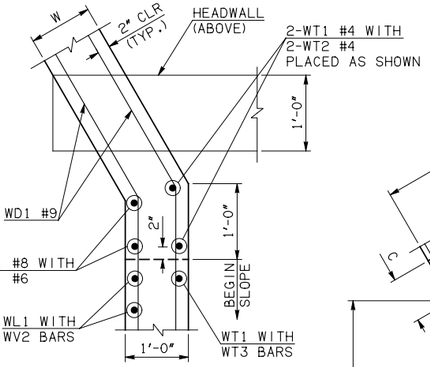

PLAN OF SHORT WING AT BARREL

NOTE: BARREL REINFORCEMENT NOT SHOWN FOR CLARITY

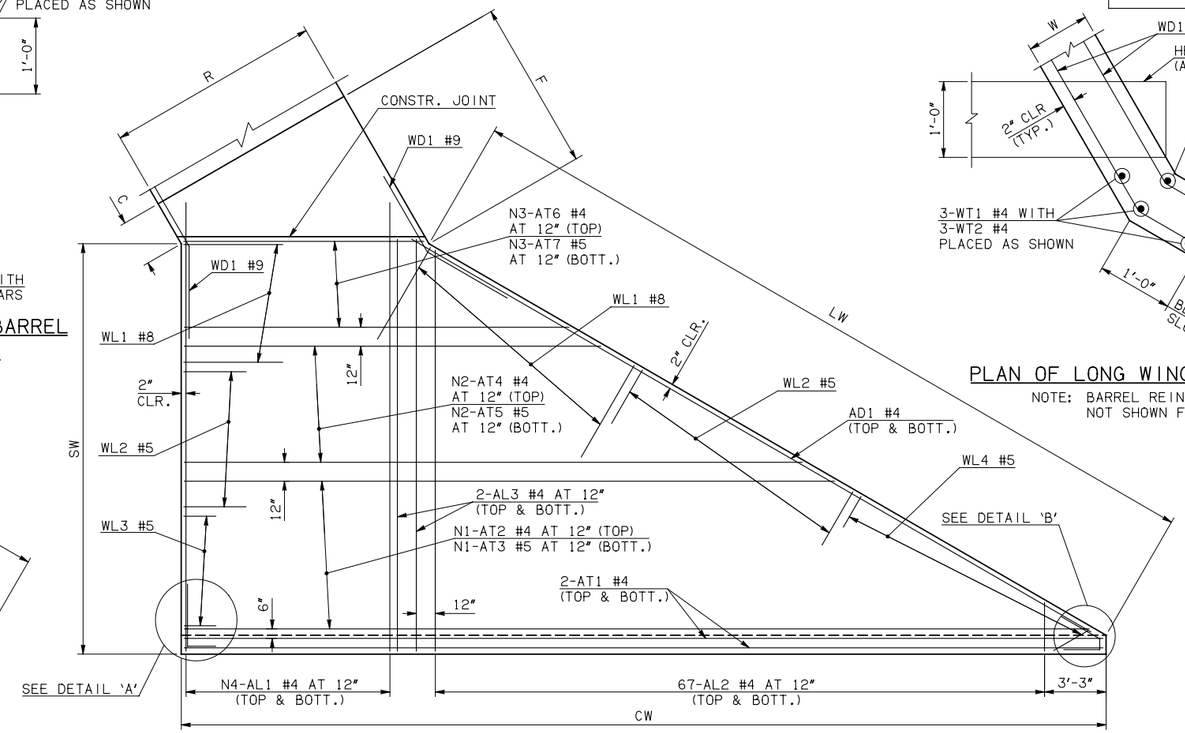

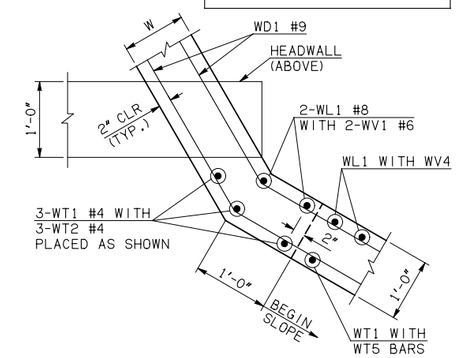

PLAN OF LONG WING AT BARREL

NOTE: BARREL REINFORCEMENT NOT SHOWN FOR CLARITY

DESCRIPTION	REVISIONS	DATE

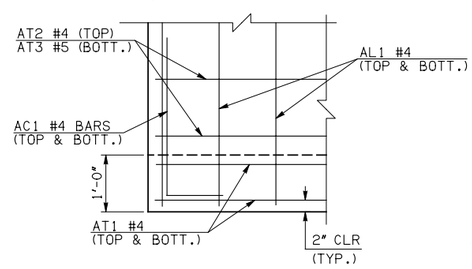

DETAIL 'A'

APRON REINFORCING

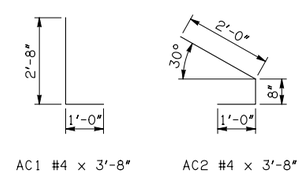

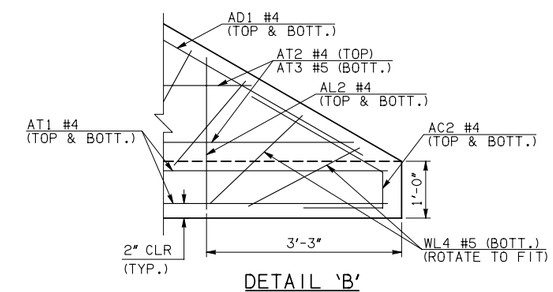

DETAIL 'B'

END SECTION VARIABLE DIMENSIONS

SPAN	W	A	B	C	CW	D	E	F	G	H	LW	R	SW
12'	12"	10'-0"	2'-2½"	3'-0¼"	101'-0¼"	3'-3½"	17'-9½"	18'-5½"	18'-8½"	31'-9"	80'-8¾"	27'-0"	41'-2¾"
14'	12"	11'-0"	2'-0½"	2'-10¼"	105'-7½"	3'-1½"	19'-11½"	20'-7¼"	20'-10½"	36'-4½"	80'-8¾"	31'-0"	41'-2¾"
16'	13"	13'-0"	2'-10¼"	3'-10¼"	110'-3"	3'-11¾"	23'-1¾"	23'-10¾"	24'-0¼"	41'-2¼"	80'-6¾"	35'-2"	41'-0¾"
18'	14"	14'-0"	2'-7¾"	3'-10"	114'-10½"	3'-9¾"	25'-4¼"	26'-2½"	26'-2¼"	46'-0"	80'-4¾"	39'-4"	40'-10¾"
20'	15"	15'-0"	2'-5¼"	3'-10"	119'-6"	3'-8"	27'-6¾"	28'-6"	28'-4"	50'-9¾"	80'-2¾"	43'-6"	40'-8¾"

APRON BAR LIST

ONE APRON SHOWN

	MARK	SIZE	FORM	12' SPAN			14' SPAN			16' SPAN			18' SPAN			20' SPAN		
				QTY.	LENGTH	REMARKS	QTY.	LENGTH	REMARKS	QTY.	LENGTH	REMARKS	QTY.	LENGTH	REMARKS	QTY.	LENGTH	REMARKS
	AC1	#4	BNT	2	3'-8"		2	3'-8"		2	3'-8"		2	3'-8"		2	3'-8"	
	AC2	#4	BNT	2	3'-8"		2	3'-8"		2	3'-8"		2	3'-8"		2	3'-8"	
1	AD1	#4	STR	2	84'-0"		2	84'-0"		2	84'-0"		2	84'-0"		2	84'-0"	
	AL1	#4	STR	60	43'-9"		68	43'-9"		78	43'-9"		88	43'-9"		98	43'-9"	
3	AL2	#4	STR	134	21'-6½" AVG.	2'-6" TO 40'-7"	134	21'-6½" AVG.	2'-6" TO 40'-7"	134	21'-6½" AVG.	2'-6" TO 40'-7"	134	21'-6½" AVG.	2'-6" TO 40'-7"	134	21'-6½" AVG.	2'-6" TO 40'-7"
	AL3	#4	STR	4	41'-9"		4	41'-9"		4	41'-9"		4	41'-9"		4	41'-9"	
	AT1	#4	STR	4	103'-2" 1		4	107'-9" 1		4	112'-5" 1		4	117'-0" 1		4	124'-1" 2	
	AT2	#4	STR	24	82'-6" AVG. 1	62'-7" TO 102'-5"	26	85'-4½" AVG. 1	63'-9" TO 107'-0"	29	87'-5" AVG. 1	63'-2" TO 111'-8"	32	89'-5" AVG. 1	62'-7" TO 116'-3"	1	123'-4" 2	
	AT3	#5	STR	24	82'-6" AVG. 1	62'-7" TO 102'-5"	26	85'-4½" AVG. 1	63'-9" TO 107'-0"	29	87'-5" AVG. 1	63'-2" TO 111'-8"	32	89'-5" AVG. 1	62'-7" TO 116'-3"	1	123'-4" 2	
	AT4	#4	STR	17	44'-5½" AVG.	30'-7" TO 58'-4"	15	47'-4½" AVG.	35'-3" TO 59'-6"	12	49'-4½" AVG.	39'-10" TO 58'-11"	9	51'-5" AVG.	44'-6" TO 58'-4"	33	91'-5½" AVG. 1	63'-9" TO 119'-2"
	AT5	#5	STR	17	44'-5½" AVG.	30'-7" TO 58'-4"	15	47'-4½" AVG.	35'-3" TO 59'-6"	12	49'-4½" AVG.	39'-10" TO 58'-11"	9	51'-5" AVG.	44'-6" TO 58'-4"	33	91'-5½" AVG. 1	63'-9" TO 119'-2"
	AT6	#4		0			0			0			0			7	54'-3½" AVG.	49'-1" TO 59'-6"
	AT7	#5		0			0			0			0			7	54'-3½" AVG.	49'-1" TO 59'-6"

1 INCLUDES 2'-6" LAP.

2 INCLUDES TWO 2'-6" LAPS.

3 QUANTITY SHOWN REPRESENTS TWO SETS.

APPROVED BY BRIDGE ENGINEER Robert J. Rusch DATE 4/09/09

OKLAHOMA DEPT. OF TRANSPORTATION
BRIDGE STANDARD (ENGLISH)

RCB CULVERTS - END SECTION DETAILS
DOUBLE CELL - 12'-0" HEIGHT - 30°

SHEET NO. 1 OF 3

1999 SPECIFICATIONS | RCB-E2-H12-30-1 | 00E
B-732E