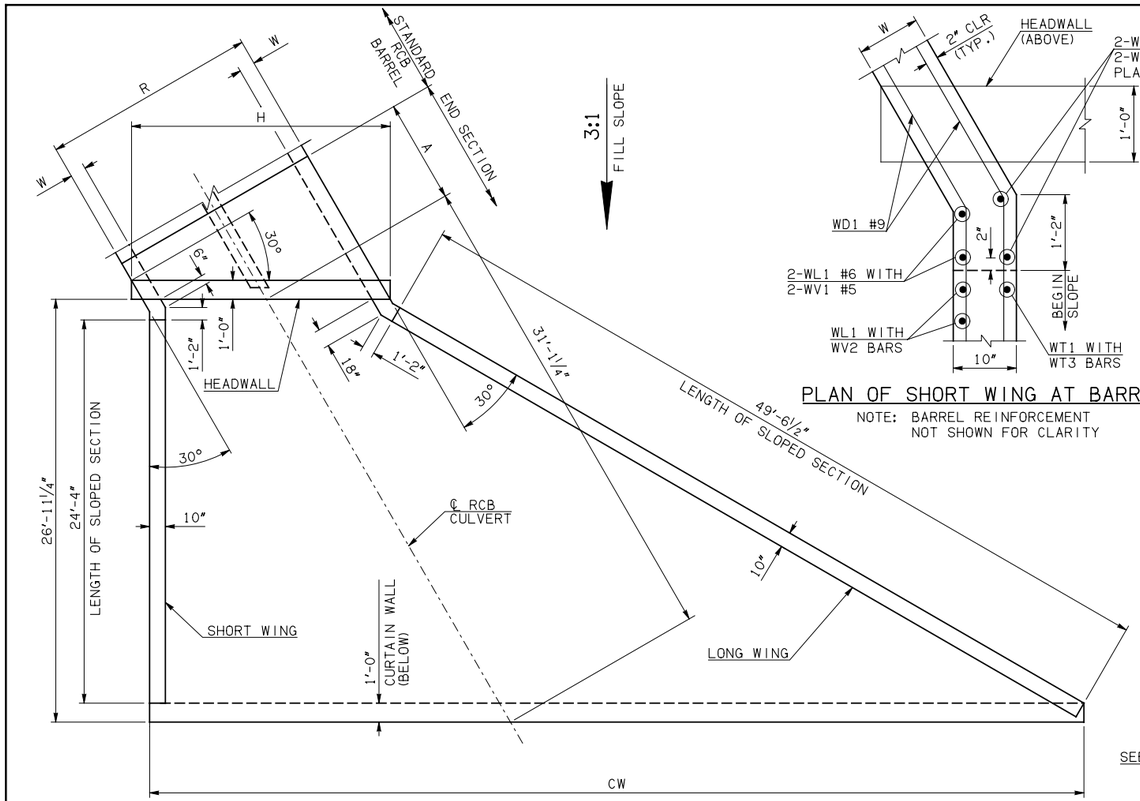

END SECTION PLAN

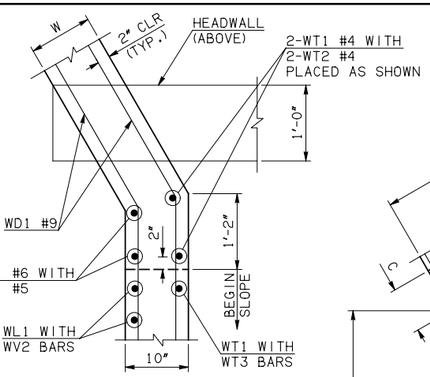

PLAN OF SHORT WING AT BARREL

NOTE: BARREL REINFORCEMENT NOT SHOWN FOR CLARITY

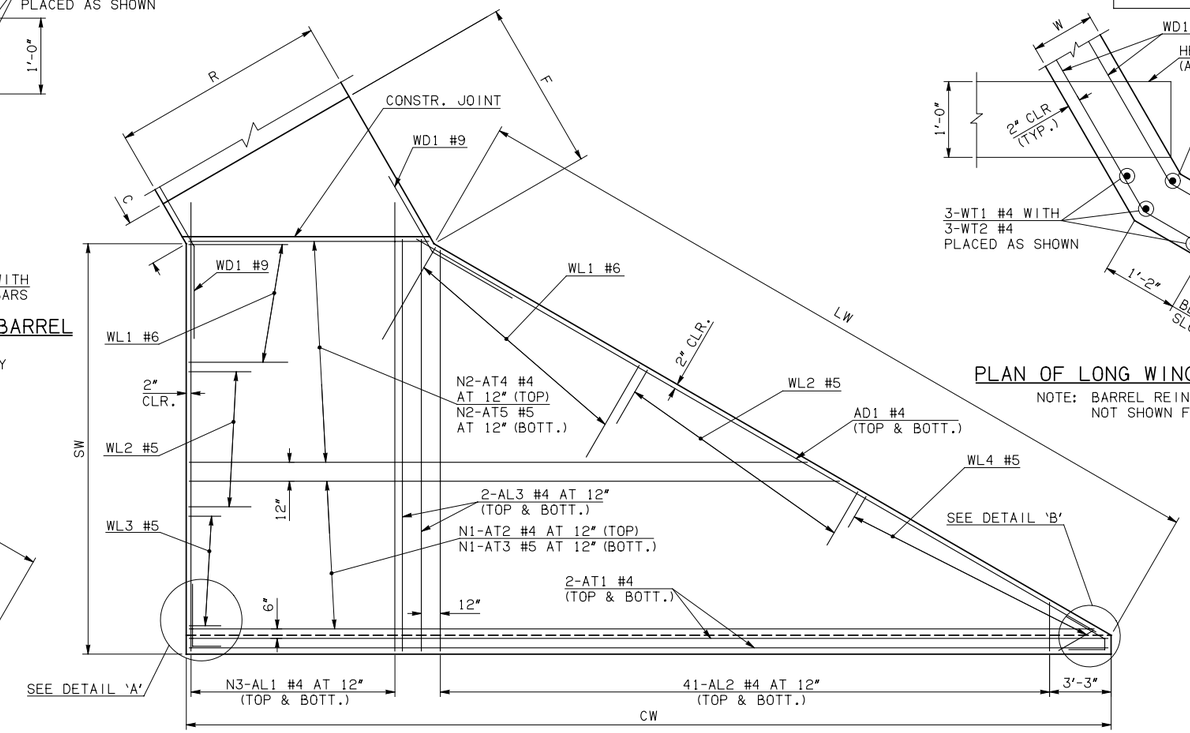

APRON REINFORCING

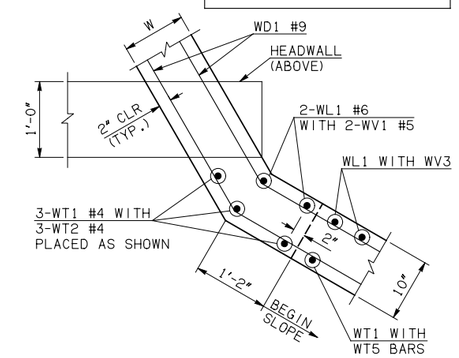

PLAN OF LONG WING AT BARREL

NOTE: BARREL REINFORCEMENT NOT SHOWN FOR CLARITY

DESCRIPTION	REVISIONS	DATE

NOTE: SEE END SECTION DETAILS SHEET NO. 2 OF 3 FOR VARIABLE REINFORCING QUANTITIES.

END SECTION VARIABLE DIMENSIONS

SPAN	W	A	B	C	CW	D	E	F	G	H	LW	R	SW
8'	12"	8'-0"	2'-6¼"	3'-8"	65'-3½"	3'-7"	13'-5¾"	14'-5¾"	14'-5"	22'-6¼"	50'-1¾"	19'-0"	25'-11¼"
10'	12"	9'-0"	2'-4¼"	3'-6"	69'-11"	3'-5¼"	15'-7¾"	16'-7½"	16'-6¾"	27'-1¾"	50'-1¾"	23'-0"	25'-11¼"
12'	12"	10'-0"	2'-2½"	3'-4¼"	74'-6½"	3'-3½"	17'-9½"	18'-9½"	18'-8½"	31'-9"	50'-1¾"	27'-0"	25'-11¼"
14'	12"	11'-0"	2'-0½"	3'-2¼"	79'-1¾"	3'-1½"	19'-11½"	20'-11¼"	20'-10½"	36'-4½"	50'-1¾"	31'-0"	25'-11¼"

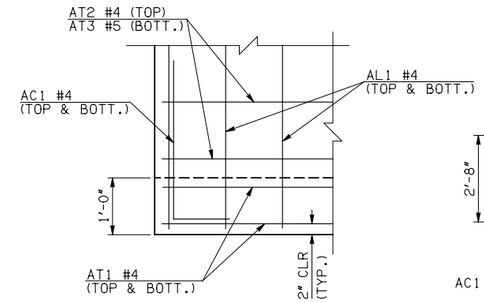

DETAIL 'A'

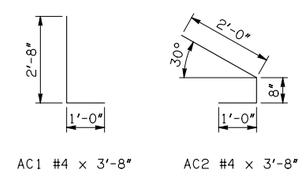

AC1 #4 × 3'-8" AC2 #4 × 3'-8"

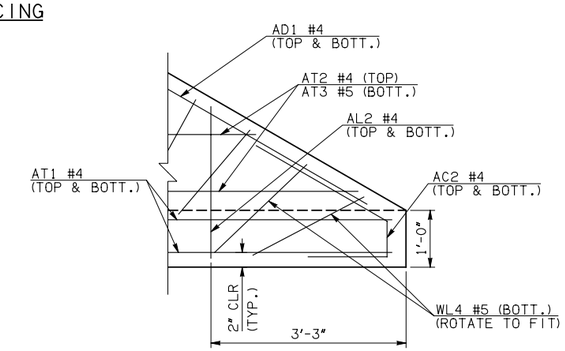

DETAIL 'B'

① INCLUDES 2'-6" LAP.

② QUANTITY SHOWN REPRESENTS TWO SETS.

APRON BAR LIST

ONE APRON SHOWN

	MARK	SIZE	FORM	8' SPAN QTY.	8' SPAN LENGTH	8' SPAN REMARKS	10' SPAN QTY.	10' SPAN LENGTH	10' SPAN REMARKS	12' SPAN QTY.	12' SPAN LENGTH	12' SPAN REMARKS	14' SPAN QTY.	14' SPAN LENGTH	14' SPAN REMARKS
	AC1	#4	BNT	2	3'-8"		2	3'-8"		2	3'-8"		2	3'-8"	
	AC2	#4	BNT	2	3'-8"		2	3'-8"		2	3'-8"		2	3'-8"	
①	AD1	#4	STR	2	51'-6"		2	51'-6"		2	51'-6"		2	51'-6"	
	AL1	#4	STR	40	28'-9"		50	28'-9"		60	28'-9"		68	28'-9"	
②	AL2	#4	STR	82	14'-0½" AVG.	2'-6" TO 25'-7"	82	14'-0½" AVG.	2'-6" TO 25'-7"	82	14'-0½" AVG.	2'-6" TO 25'-7"	82	14'-0½" AVG.	2'-6" TO 25'-7"
	AL3	#4	STR	4	26'-9"		4	26'-9"		4	26'-9"		4	26'-9"	
①	AT1	#4	STR	4	67'-5"		4	72'-0"		4	76'-8"		4	81'-3"	
①	AT2	#4	STR	3	64'-11½" AVG.	63'-3" TO 66'-8"	6	67'-0" AVG.	62'-8" TO 71'-4"	8	69'-10" AVG.	63'-9" TO 75'-11"	11	71'-10½" AVG.	63'-3" TO 80'-6"
①	AT3	#5	STR	3	64'-11½" AVG.	63'-3" TO 66'-8"	6	67'-0" AVG.	62'-8" TO 71'-4"	8	69'-10" AVG.	63'-9" TO 75'-11"	11	71'-10½" AVG.	63'-3" TO 80'-6"
	AT4	#4	STR	23	39'-11½" AVG.	20'-11" TO 59'-0"	20	41'-11½" AVG.	25'-6" TO 58'-5"	18	44'-10" AVG.	30'-1" TO 59'-7"	15	46'-10½" AVG.	34'-9" TO 59'-0"
	AT5	#5	STR	23	39'-11½" AVG.	20'-11" TO 59'-0"	20	41'-11½" AVG.	25'-6" TO 58'-5"	18	44'-10" AVG.	30'-1" TO 59'-7"	15	46'-10½" AVG.	34'-9" TO 59'-0"

APPROVED BY BRIDGE ENGINEER Robert J. Rusch DATE 4/09/09

OKLAHOMA DEPT. OF TRANSPORTATION
BRIDGE STANDARD (ENGLISH)

RCB CULVERTS - END SECTION DETAILS
DOUBLE CELL - 7'-0" HEIGHT - 30°
SHEET NO. 1 OF 3

1999 SPECIFICATIONS | RCB-E2-H7-30-1 | 00E
B-717E