DESCRIPTION	REVISIONS	DATE

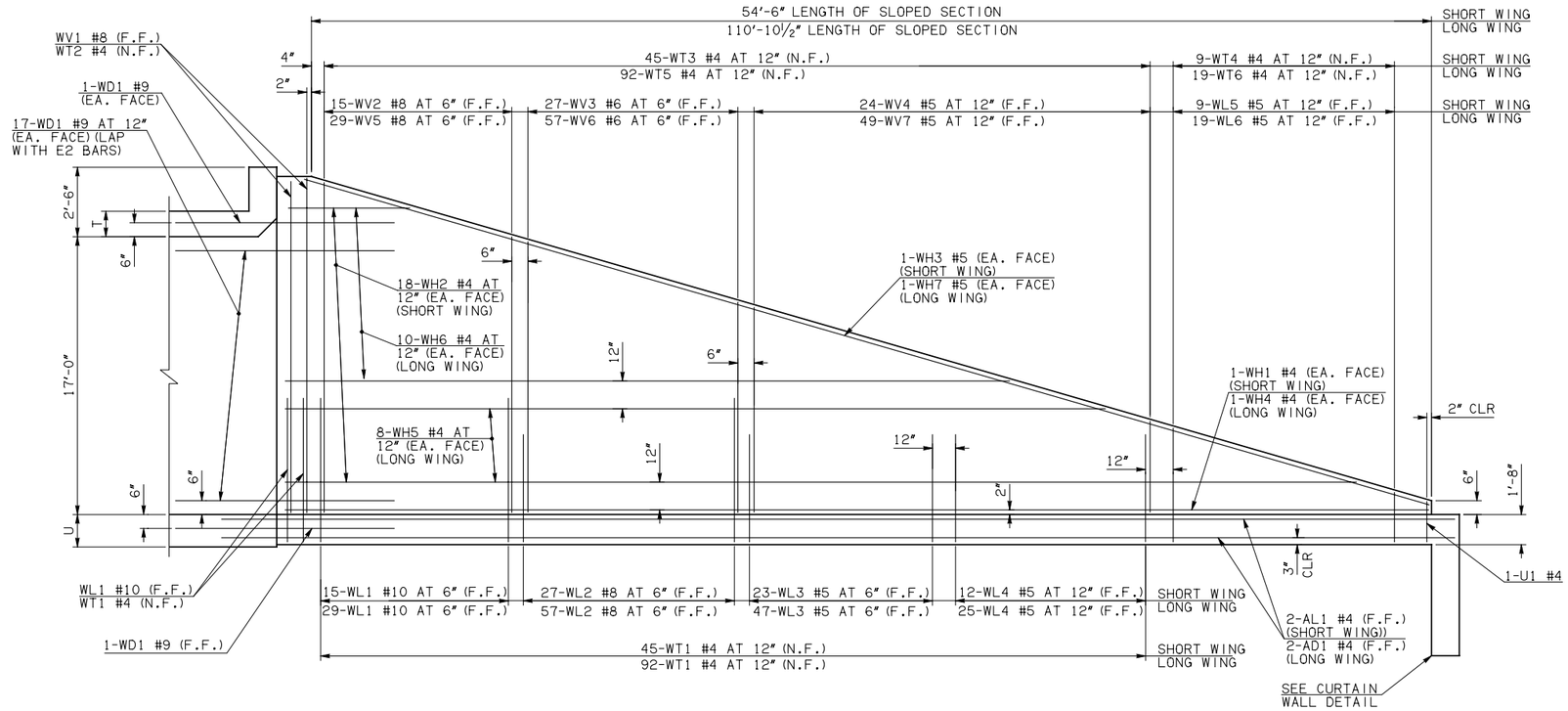

NOTE: F.F. = FAR FACE
N.F. = NEAR FACE

WING ELEVATION

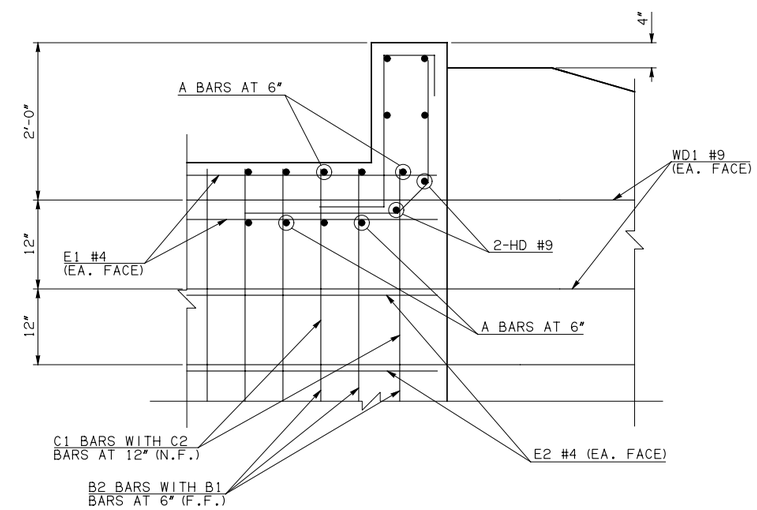

④ HEADWALL DETAIL AT EXTERIOR WALL

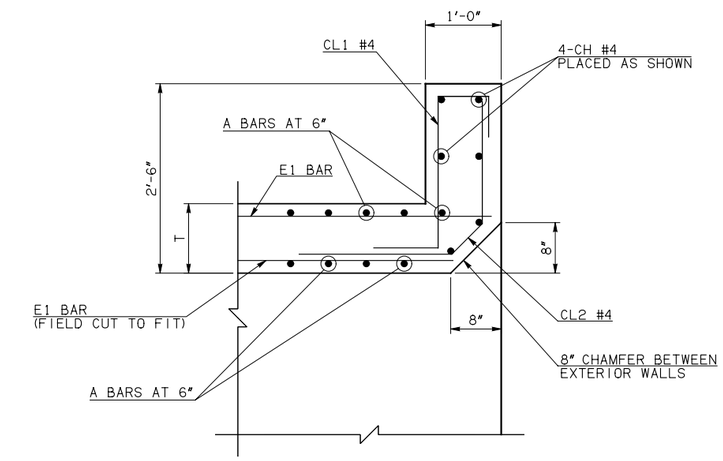

④ HEADWALL DETAIL AT MIDSPAN

DIMENSION SHOWN NORMAL TO HEADWALL

NOTES:

① INCLUDES 2'-6" LAP

③ QUANTITY SHOWN REPRESENTS TWO SETS.

④ FOR FURTHER INFORMATION REGARDING END SECTION BARS A, B, C, E1, AND E2, REFER TO RCB CULVERT - BARREL DETAILS.

WINGWALL BAR LIST
(LONG AND SHORT WING INCLUDED)

	MARK	SIZE	QTY.	FORM	LENGTH	REMARKS
	WD1	#9	74	BNT	8'-4"	
	WH1	#4	2	STR	55'-4"	
③	WH2	#4	36	STR	28'-2" AVG.	3'-4" TO 53'-0"
	WH3	#5	2	STR	57'-5"	
①	WH4	#4	2	STR	114'-2"	
③①	WH5	#4	16	STR	88'-6½" AVG.	67'-9" TO 109'-4"
③	WH6	#4	20	STR	32'-7" AVG.	5'-10" TO 59'-4"
①	WH7	#5	2	STR	114'-9"	
	WL1	#10	48	BNT	21'-10"	
	WL2	#8	84	BNT	19'-3"	
	WL3	#5	70	BNT	12'-4"	
	WL4	#5	37	BNT	6'-10"	
	WL5	#5	9	BNT	5'-5½" AVG.	4'-1" TO 6'-10"
	WL6	#5	19	BNT	5'-4" AVG.	3'-10" TO 6'-10"
	WT1	#4	142	STR	3'-6"	
	WT2	#4	5	STR	19'-0"	
	WT3	#4	45	STR	11'-3½" AVG.	3'-9" TO 18'-10"
	WT4	#4	9	STR	3'-5½" AVG.	2'-1" TO 4'-10"
	WT5	#4	92	STR	11'-3" AVG.	3'-7" TO 18'-11"
	WT6	#4	19	STR	3'-4" AVG.	1'-10" TO 4'-10"
	WV1	#8	4	STR	19'-0"	
	WV2	#8	15	STR	17'-7½" AVG.	16'-5" TO 18'-10"
	WV3	#6	27	STR	14'-0½" AVG.	11'-10" TO 16'-3"
	WV4	#5	24	STR	7'-8½" AVG.	3'-9" TO 11'-8"
	WV5	#8	29	STR	17'-9" AVG.	16'-7" TO 18'-11"
	WV6	#6	57	STR	14'-1½" AVG.	11'-9" TO 16'-6"
	WV7	#5	49	STR	7'-7½" AVG.	3'-7" TO 11'-8"
	U1	#4	2	BNT	4'-8"	

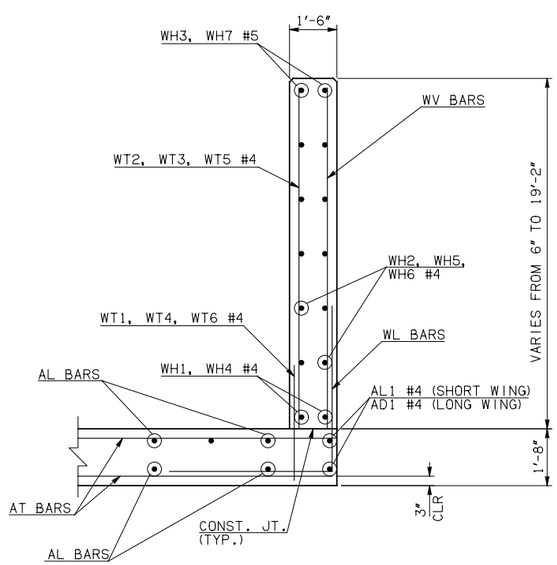

TYPICAL SECTION THRU WING

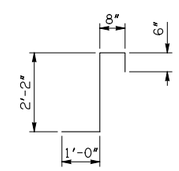

CL1 #4 x 4'-4"

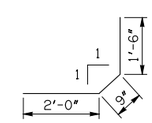

CL2 #4 x 4'-3"

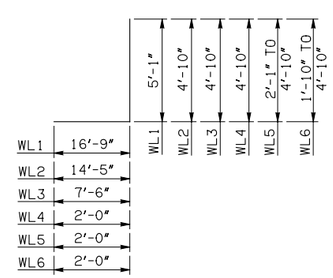

WL1 #10 x 21'-10"
WL2 #8 x 19'-3"
WL3 #5 x 12'-4"
WL4 #5 x 6'-10"
WL5 #5 x 5'-5½" AVG.
WL6 #5 x 5'-4" AVG.

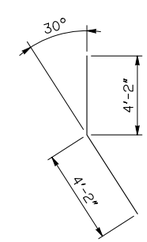

WD1 #9 x 8'-4"

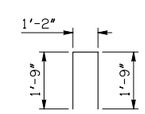

U1 #4 x 4'-8"

APPROVED BY BRIDGE ENGINEER Robert J. Rusch DATE 4/09/09

OKLAHOMA DEPT. OF TRANSPORTATION
BRIDGE STANDARD (ENGLISH)

RCB CULVERTS - END SECTION DETAILS
SINGLE CELL - 17'-0" HEIGHT - 30°

SHEET NO. 3 OF 3

1999 SPECIFICATIONS | RCB-E1-H17-30-3 | 00E
B-698E