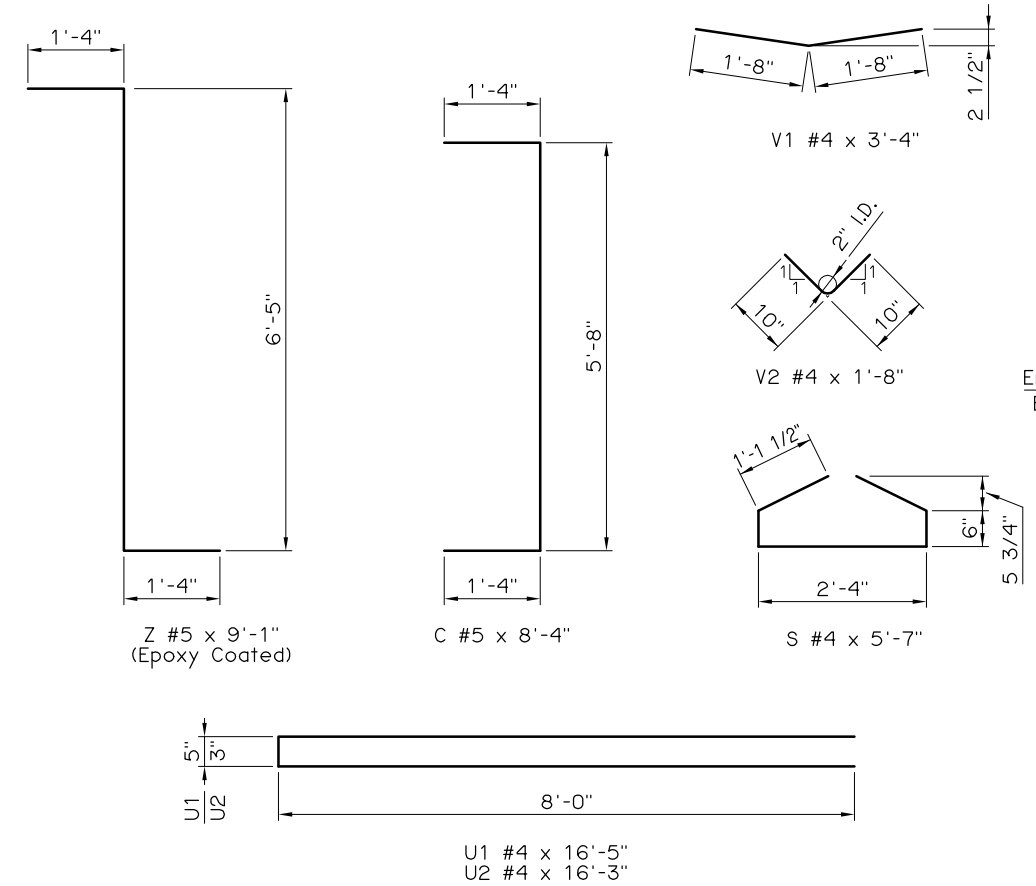

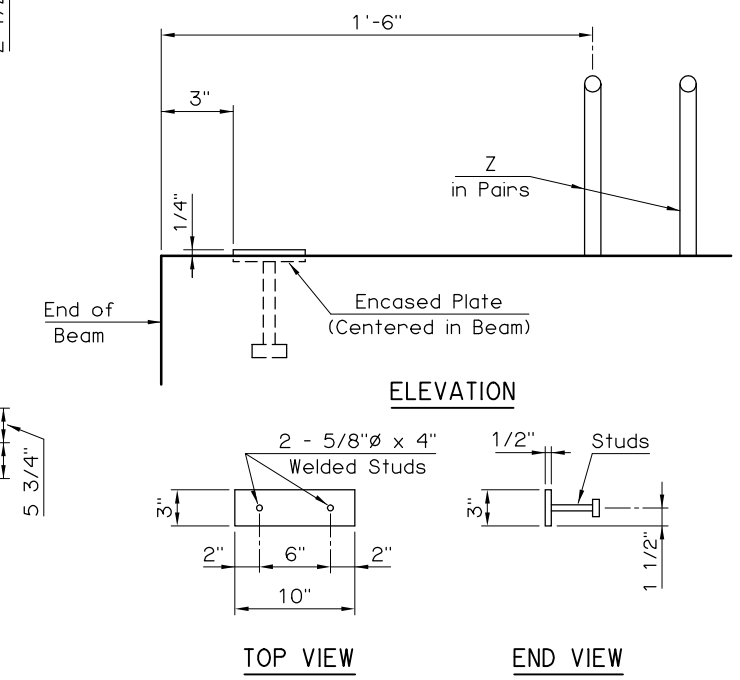

ENCASED BEAM PLATE DETAILS

NOTE:
Encased Beam Plate located at expansion end only.

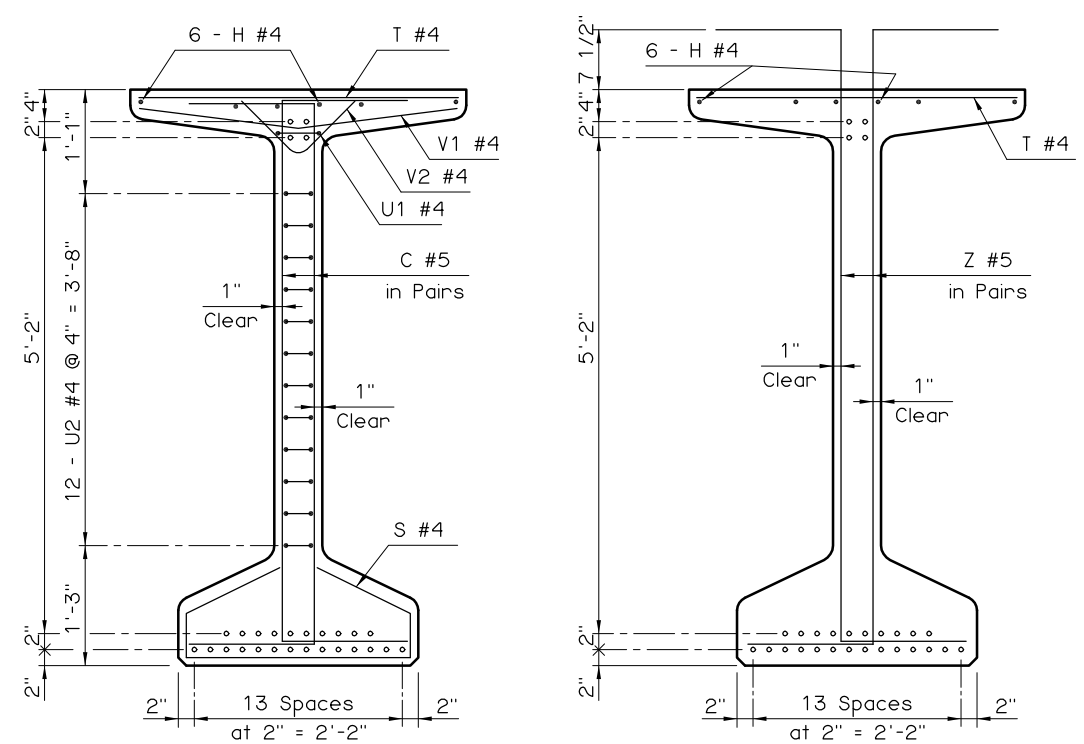

BEAM SECTIONS

(28 - 0.6"ø STRANDS)

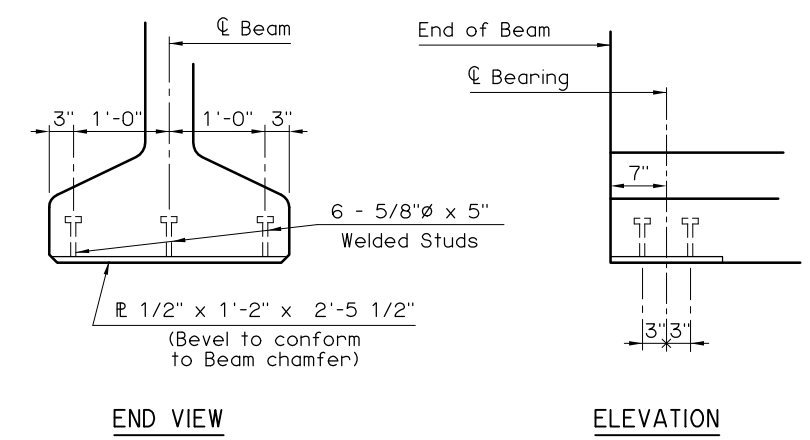

ENCASED SOLE PLATE DETAILS

NOTE:
Encased Sole Plate located at each end of Beam.

APPROVED BY BRIDGE ENGINEER [signature] DATE 8/29/03

OKLAHOMA DEPT. OF TRANSPORTATION
BRIDGE STANDARD (ENGLISH)

TYPE J P.C. BEAM DETAILS
95' SPAN
CONVENTIONAL (SHEET 2 OF 2)

1999 SPECIFICATIONS	B40-C-PCB-J-95-2	00E

B-329E