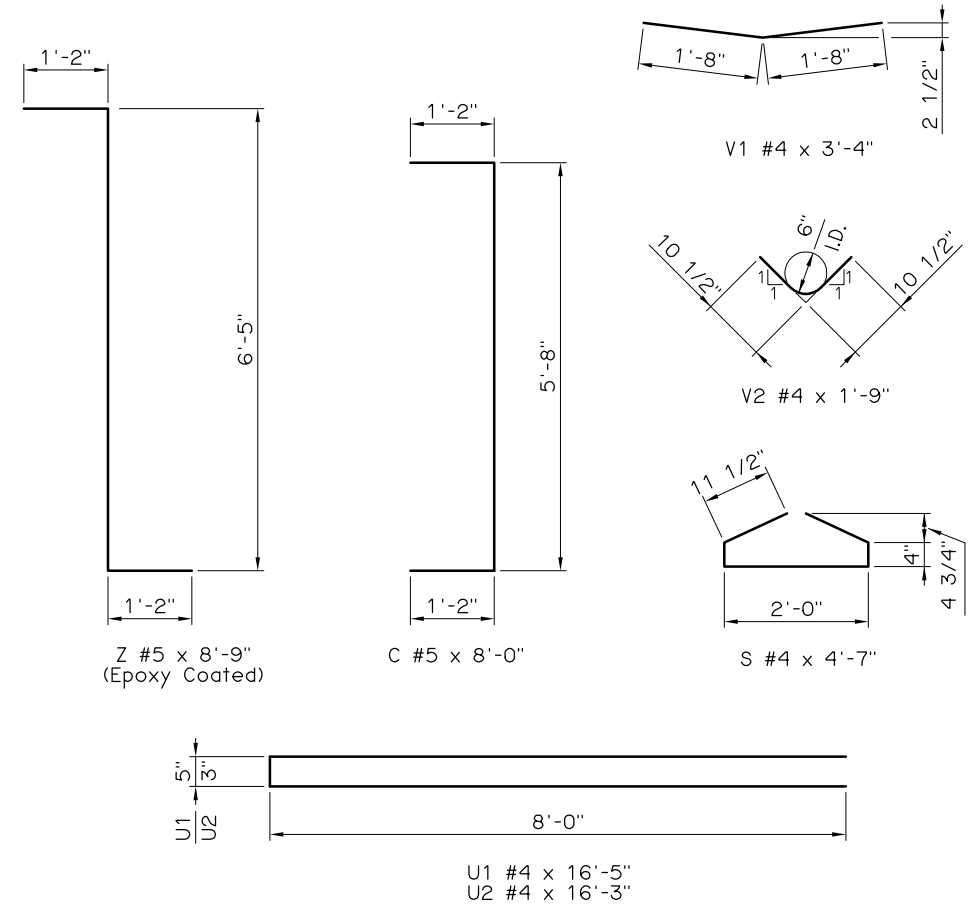

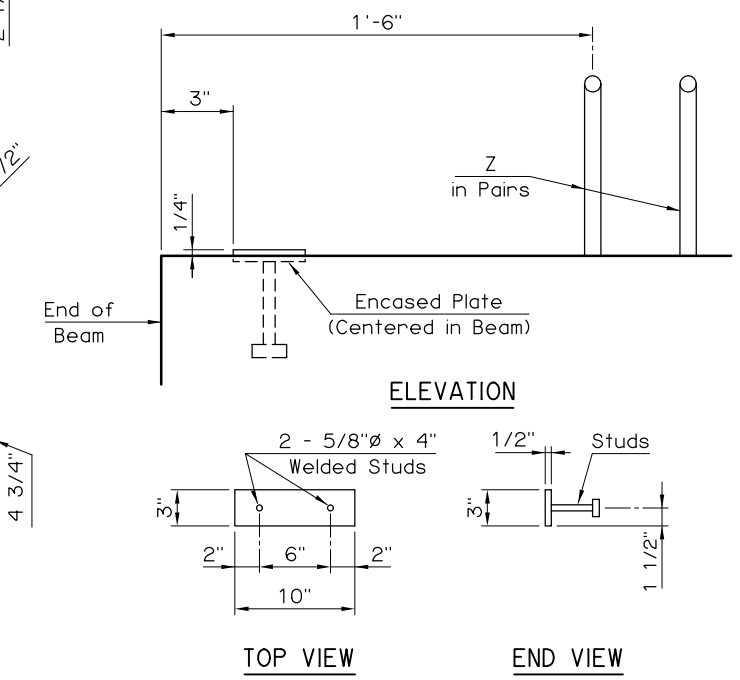

ENCASED BEAM PLATE DETAILS

NOTE:
Encased Beam Plate located at expansion end only.

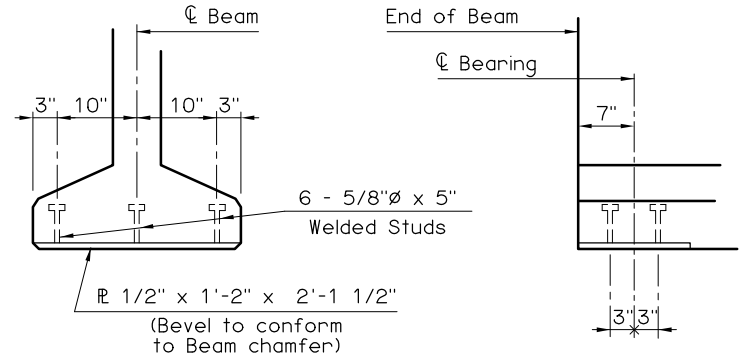

ENCASED SOLE PLATE DETAILS

NOTE:
Encased Sole Plate located at each end of Beam.

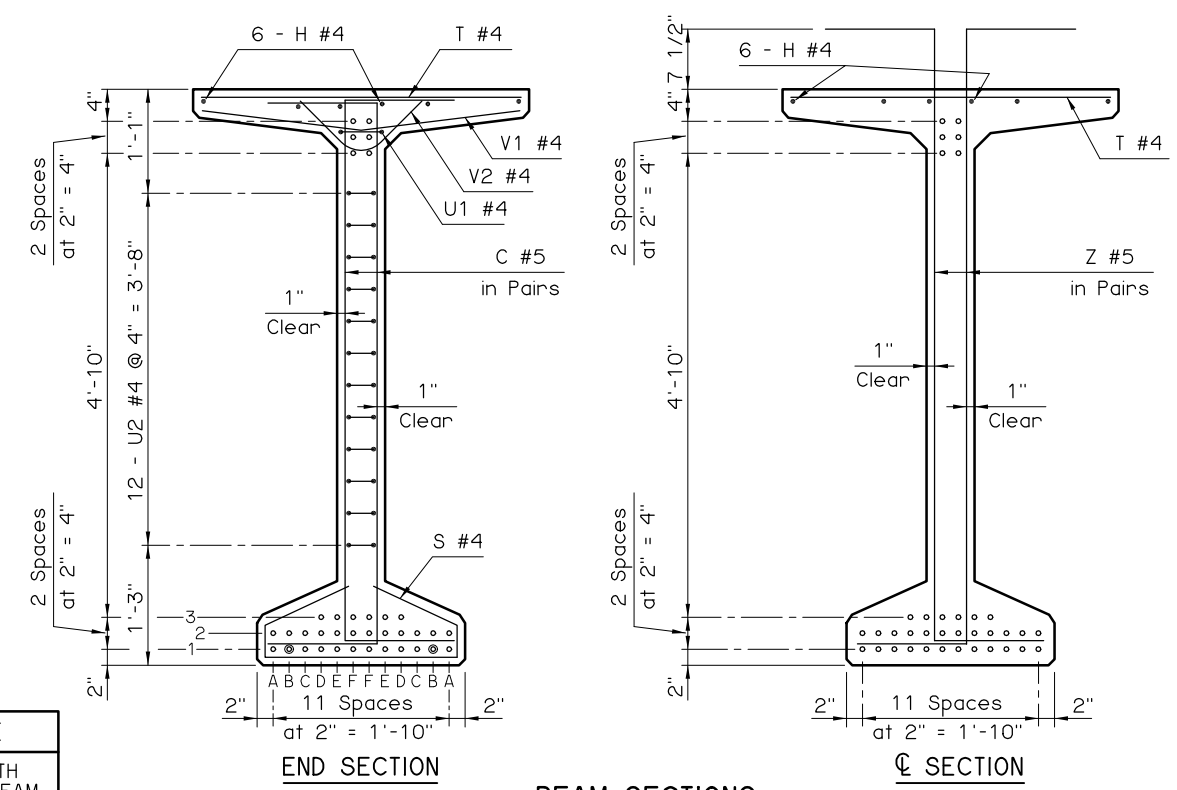

BEAM SECTIONS

(36 - 0.6"ø STRANDS)

DEBOND SCHEDULE	
DEBOND PAIR	DEBOND LENGTH FROM END OF BEAM
B1	7'-0"

APPROVED BY BRIDGE ENGINEER [signature] DATE 8/29/03

OKLAHOMA DEPT. OF TRANSPORTATION
BRIDGE STANDARD (ENGLISH)

TYPE BT-72 P.C. BEAM DETAILS
105' SPAN
CONVENTIONAL (SHEET 2 OF 2)

1999 SPECIFICATIONS	B40-C-PCB-BT-105-2	OOE

B-321E