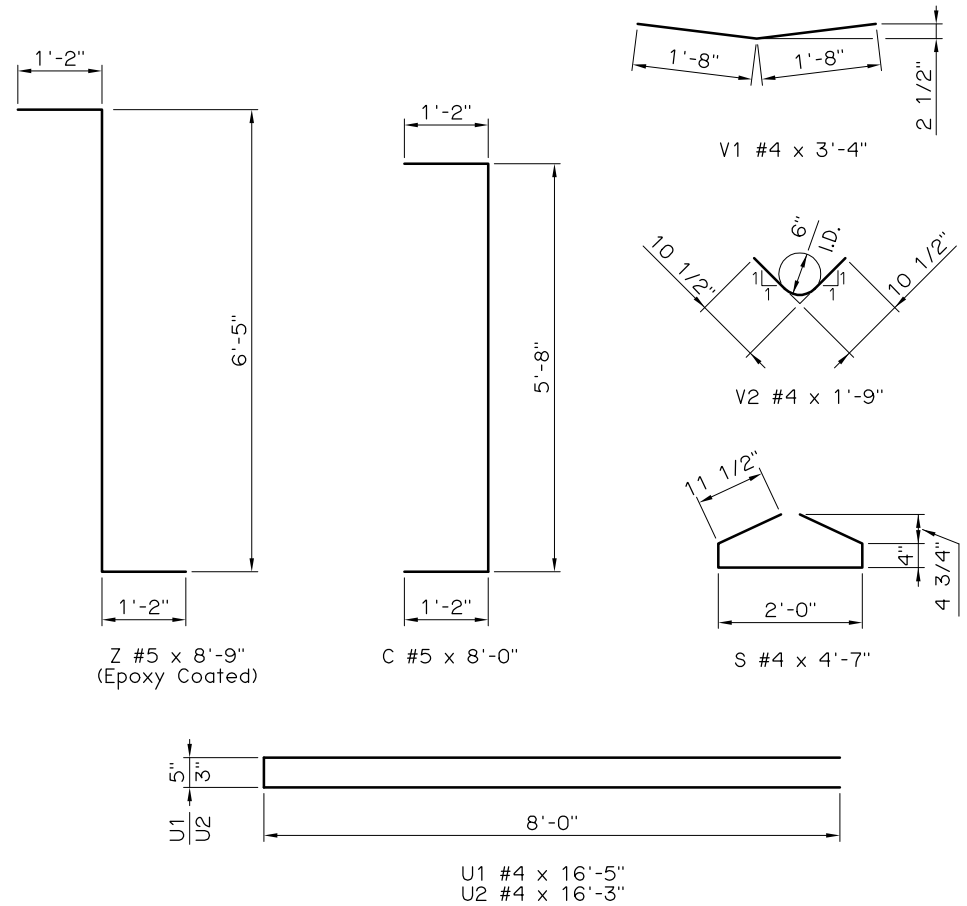

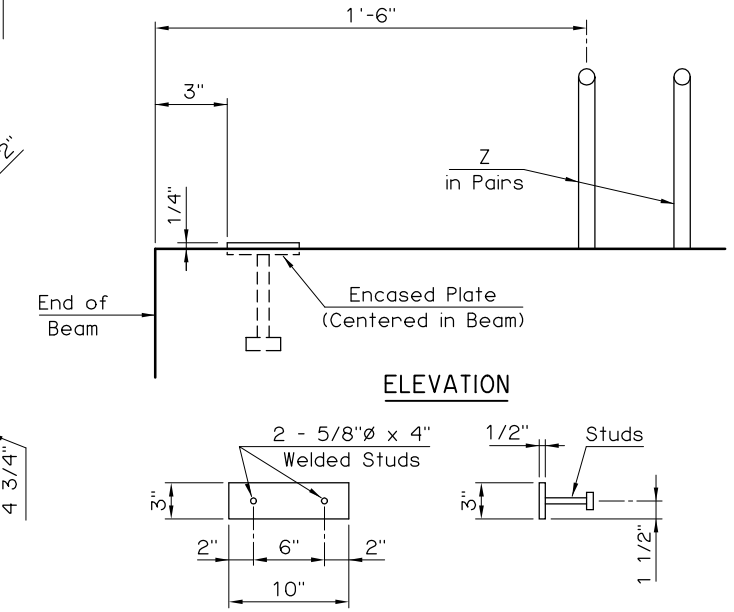

ENCASED BEAM PLATE DETAILS

NOTE:
Encased Beam Plate located at expansion end only.

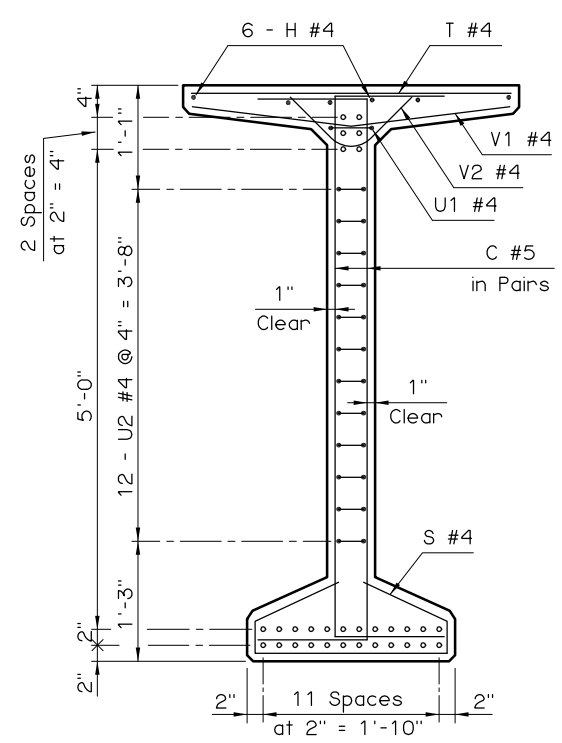

END SECTION

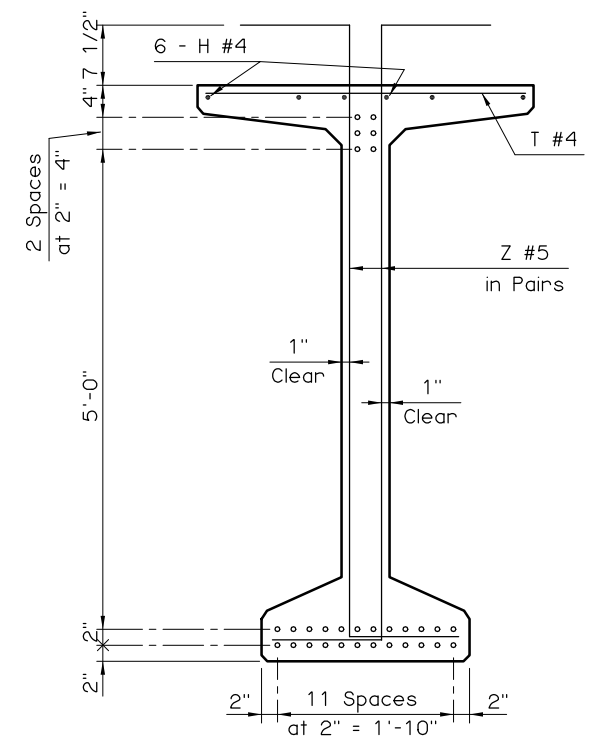

℄ SECTION

BEAM SECTIONS

(30 - 0.6"ø STRANDS)

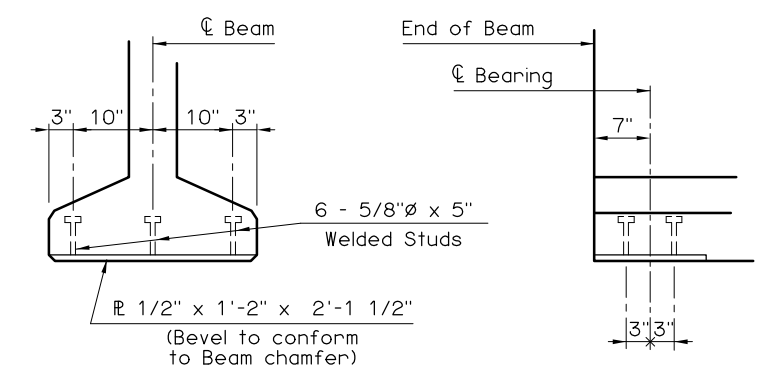

ENCASED SOLE PLATE DETAILS

NOTE:
Encased Sole Plate located at each end of Beam.

APPROVED BY BRIDGE ENGINEER DATE 8/29/03

OKLAHOMA DEPT. OF TRANSPORTATION
BRIDGE STANDARD (ENGLISH)

TYPE BT-72 P.C. BEAM DETAILS
95' SPAN
CONVENTIONAL (SHEET 2 OF 2)

1999 SPECIFICATIONS	B40-C-PCB-BT-95-2	00E

B-317E