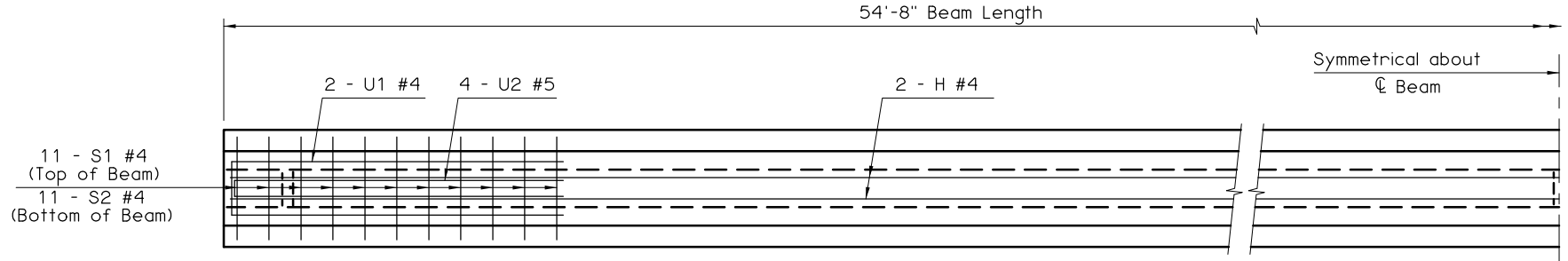

PLAN

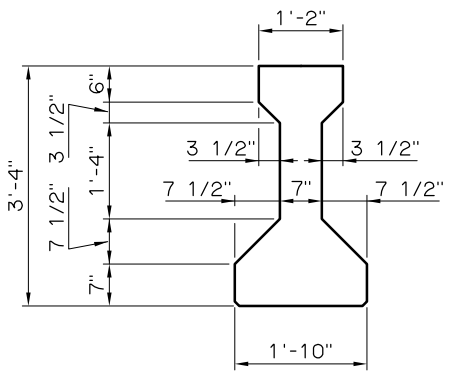

END VIEW
(Type C P.C.B.)

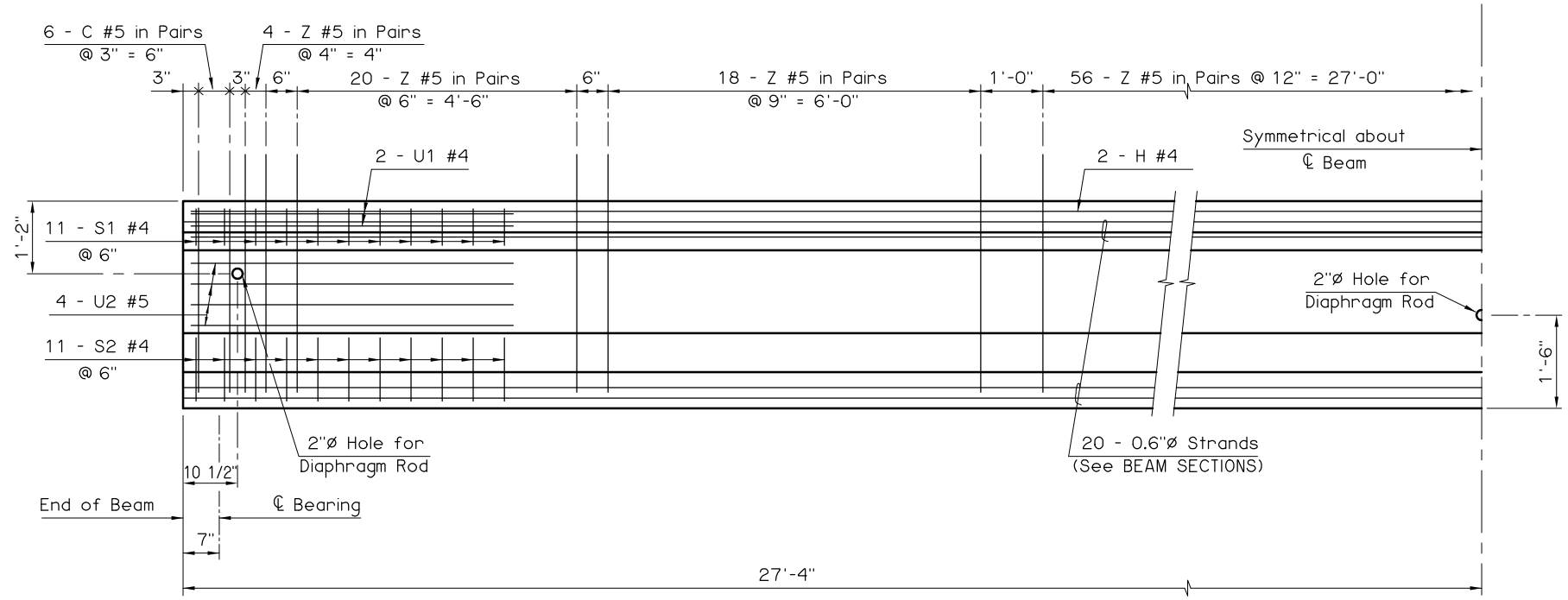

ELEVATION

PRESTRESSED CONCRETE BEAM NOTES

COMPRESSIVE STRENGTH
The required compressive strength of the concrete is 5,250 p.s.i. at transfer of prestress and 7,000 p.s.i. at 28 days.

STRAND TYPE
The required strand type is low-relaxation. Use strand having a nominal diameter of 0.6" with ultimate tensile strength of 270 k.s.i.

LFD OPERATING RATING - HS 39.2
The Operating Rating shown is based on a nominal strength using only strands that are bonded for the full length of the beam. All partially bonded strands are neglected in strength computations.

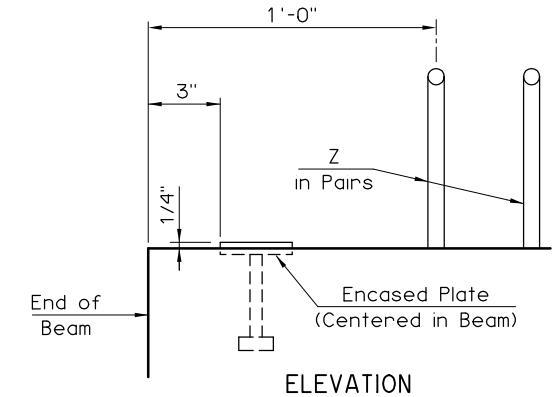

ELEVATION

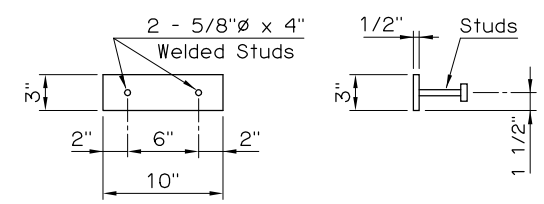

TOP VIEW END VIEW

ENCASED BEAM PLATE DETAILS

NOTE:
Encased Beam Plate located at expansion end only.

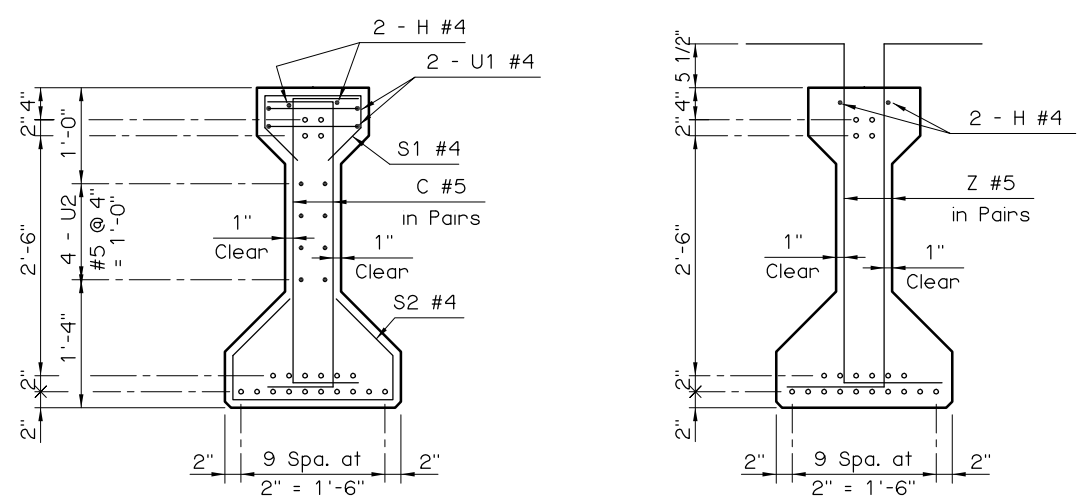

END SECTION ℄ SECTION

BEAM SECTIONS
(20 - 0.6"ø STRANDS)

Information shown on this sheet is applicable only to the standard bridge cross-section with 40' Clear Roadway, 8" Deck Slab and 4 Beams at 11'-4" spacing. Stay-In-Place Deck Forms are permitted if the conditions listed in the STAY-IN-PLACE DECK FORM NOTES on LONGITUDINAL SECTION sheet are satisfied. Any modification will require a custom design with an appropriate Dead Load Deflection Diagram.

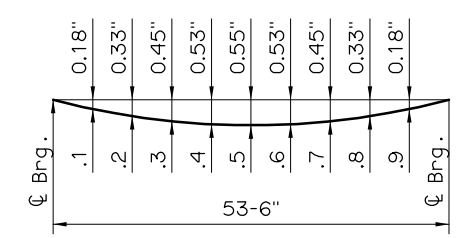

DEAD LOAD DEFLECTION DIAGRAM

NOTE:
The Dead Load Deflection shown above at the tenth points are the initial deflections due to Deck Slab + Diaphragms + 5 p.s.f. Deck Form Allowance + Concrete Traffic Rail. It does not include the Beam weight or Future Wearing Surface.

APPROVED BY BRIDGE ENGINEER DATE 12-1-04

OKLAHOMA DEPT. OF TRANSPORTATION
BRIDGE STANDARD (ENGLISH)

TYPE C P.C. BEAM DETAILS
55' SPAN
CONVENTIONAL

1999 SPECIFICATIONS	B40-C-PCB-C-55	01E

B-299E