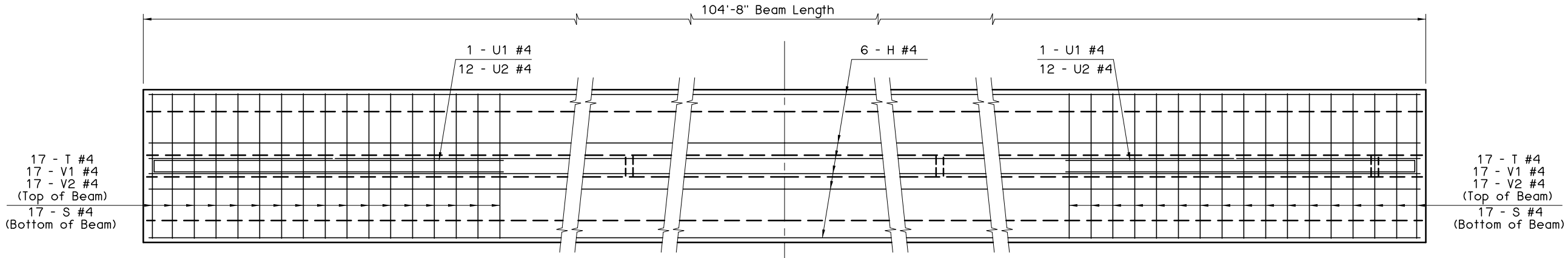

HALF PLAN AT ABUTMENT

HALF PLAN AT PIER

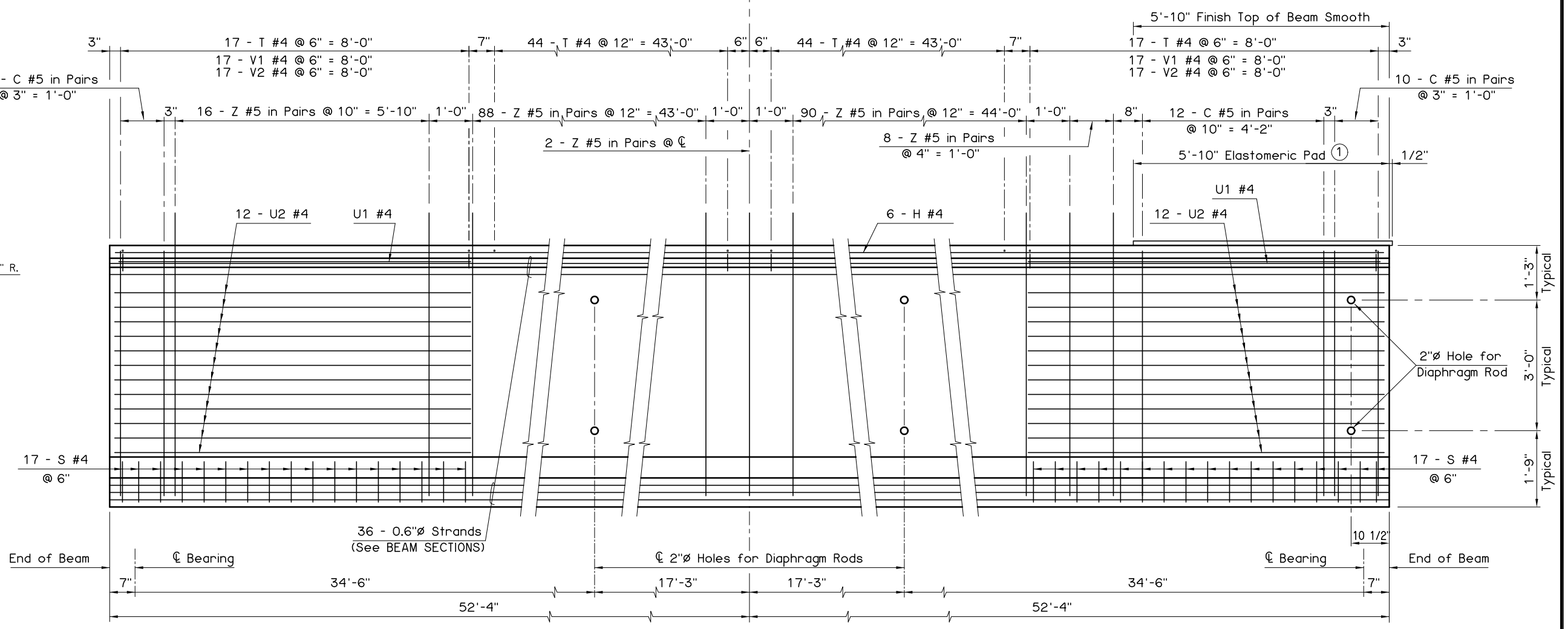

HALF ELEVATION AT ABUTMENT

HALF ELEVATION AT PIER

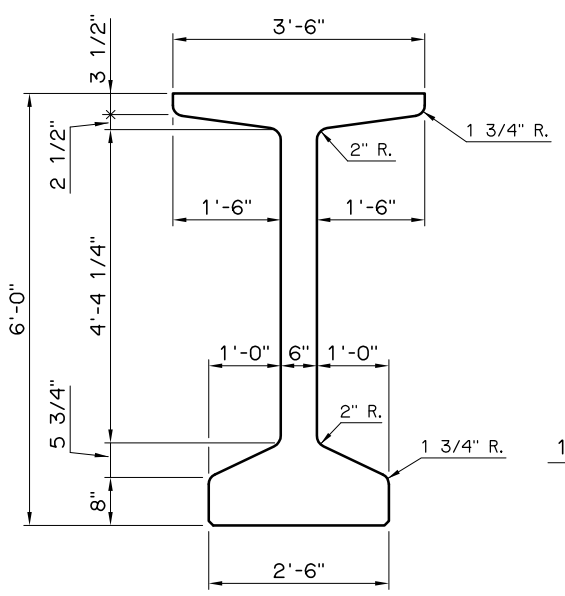

END VIEW
(Type J P.C.B.)

Information shown on this sheet is applicable only to the standard bridge cross-section with 40' Clear Roadway, 8" Deck Slab and 4 Beams at 11'-4" spacing. Stay-In-Place Deck Forms are permitted if the conditions listed in the STAY-IN-PLACE DECK FORM NOTES on LONGITUDINAL SECTION sheet are satisfied. Any modification will require a custom design with an appropriate Dead Load Deflection Diagram.

PRESTRESSED CONCRETE BEAM NOTES

COMPRESSIVE STRENGTH
The required compressive strength of the concrete is 5,250 p.s.i. at transfer of prestress and 7,000 p.s.i. at 28 days.

STRAND TYPE
The required strand type is low-relaxation. Use strand having a nominal diameter of 0.6" with ultimate tensile strength of 270 k.s.i.

LFD OPERATING RATING - HS 45.0
The Operating Rating shown is based on a nominal strength using only strands that are bonded for the full length of the beam. All partially bonded strands are neglected in strength computations.

1 Elastomeric Pad shall have a 50 durometer hardness and consist of a single layer 7/8" thick x 3'-6" wide x 5'-10 1/2" long. The pad shall extend 1/2" beyond the end of the beam as shown.

APPROVED BY BRIDGE ENGINEER DATE 12-1-04

OKLAHOMA DEPT. OF TRANSPORTATION
BRIDGE STANDARD (ENGLISH)

TYPE J P.C. BEAM DETAILS
105' SPAN
INTEGRAL (SHEET 1 OF 2)

1999 SPECIFICATIONS	B40-I-PCB-J-105-1	01E

B-132E