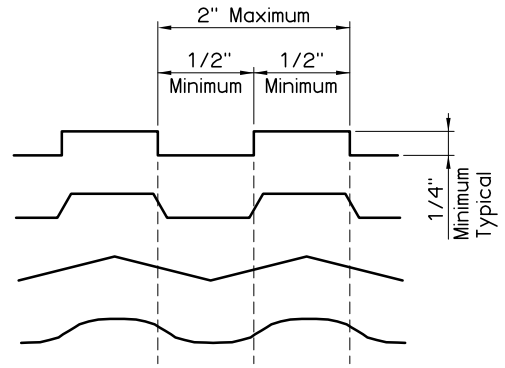

INTENTIONALLY ROUGHENED SURFACE EXAMPLES

Top surface of P.C. Beams shall be intentionally roughened to a minimum height of 1/4" over a maximum pitch of 2" measured longitudinally along the length of the beam. The crest and trough associated with the height shall not be less than 1/2" and shall extend the full width of the top flange. Roughened surface may be obtained by a special trowel as shown in the examples, by cleaning the concrete surface with a stiff wire brush (or blasting) to the extent that aggregate is exposed to a height of 1/4", or by another approved method. The method used shall be submitted for approval by the Engineer. Repair any damage to reinforcement epoxy coating before placement of deck concrete.

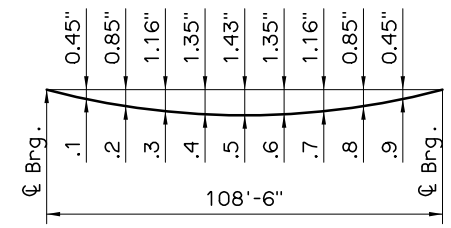

DEAD LOAD DEFLECTION DIAGRAM

NOTE:
The Dead Load Deflection shown above at the tenth points are the initial deflections due to Deck Slab + Diaphragms + 5 p.s.f. Deck Form Allowance + Concrete Traffic Rail. It does not include the Beam weight or Future Wearing Surface.

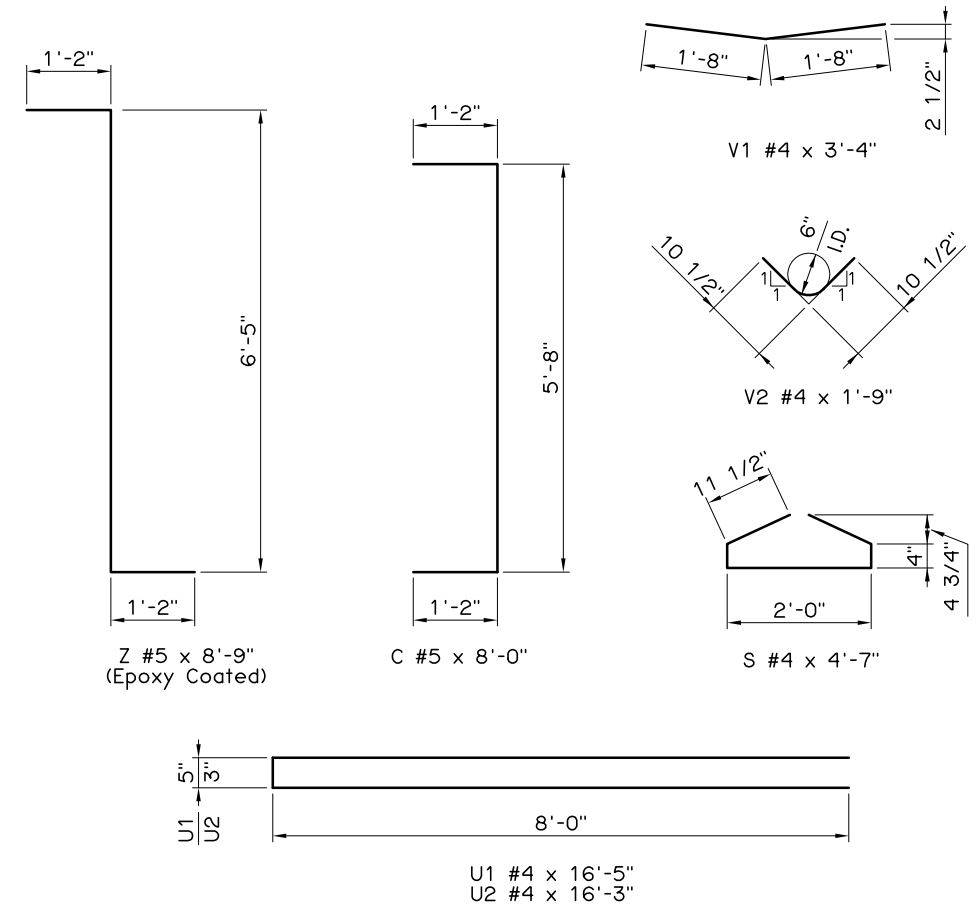

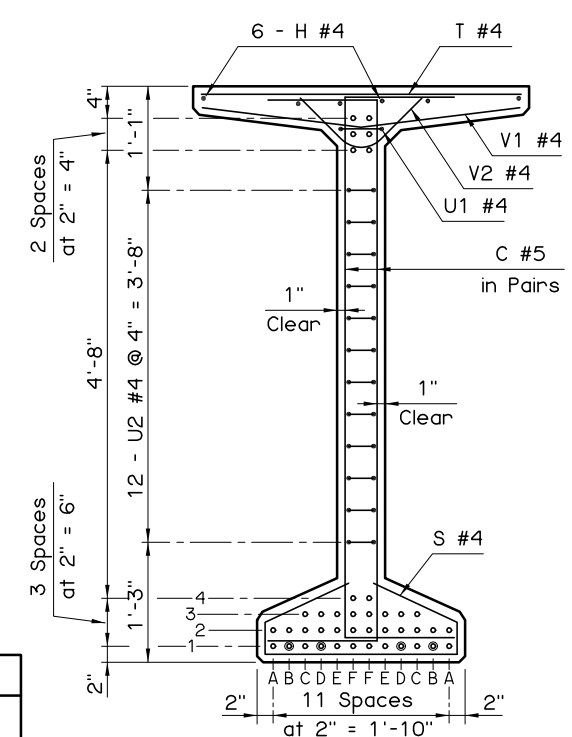

END SECTION

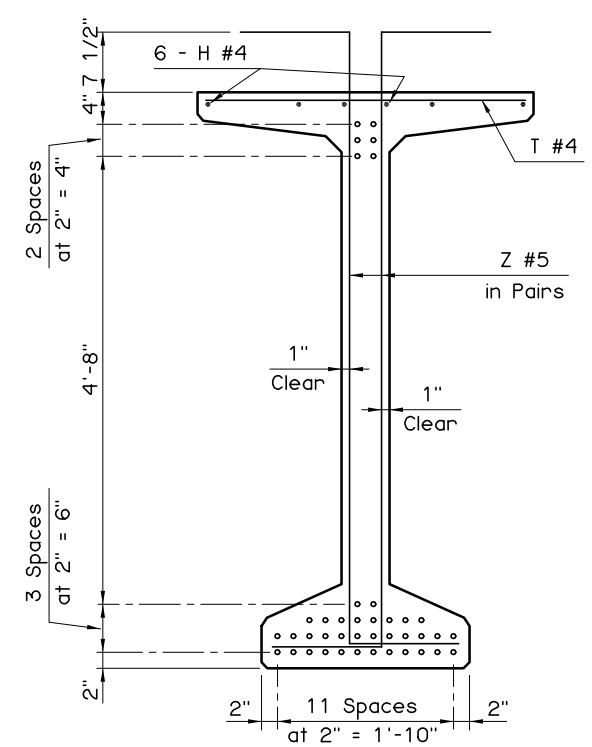

℄ SECTION

BEAM SECTIONS
(40- 0.6"ø STRANDS)

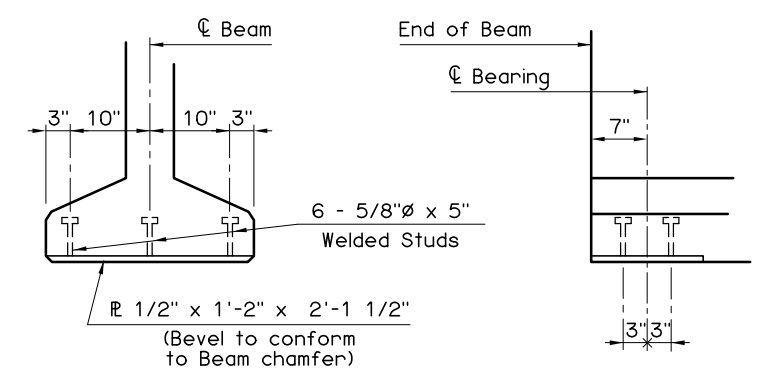

END VIEW ELEVATION

ENCASED SOLE PLATE DETAILS

NOTE:
Encased Sole Plate located at each end of Beam.

DEBOND SCHEDULE	
DEBOND PAIR	DEBOND LENGTH FROM END OF BEAM
B1	10'-0"
D1	5'-0"

APPROVED BY BRIDGE ENGINEER DATE 8/19/03

OKLAHOMA DEPT. OF TRANSPORTATION
BRIDGE STANDARD (ENGLISH)

TYPE BT-72 P.C. BEAM DETAILS
110' SPAN
INTEGRAL (SHEET 2 OF 2)

1999 SPECIFICATIONS	B40-I-PCB-BT-110-2	OOE

B-123E