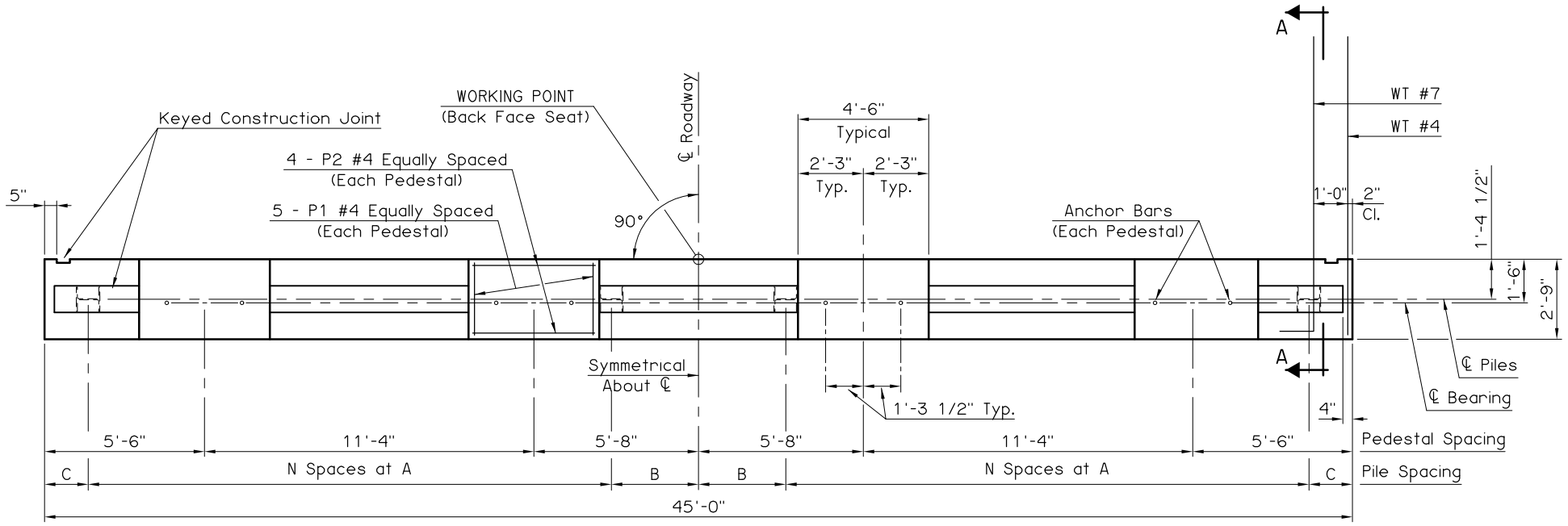

PLAN

PILE SCHEDULE						
SPAN	TOTAL NUMBER OF PILES	N	A	B	C	MAXIMUM FACTORED PILE LOAD
65'	8	3	5'-8"	2'-10"	2'-8"	74.6 TON
70'	8	3	5'-8"	2'-10"	2'-8"	77.3 TON
75'	9	4	5'-0"	0"	2'-6"	71.1 TON
80'	9	4	5'-0"	0"	2'-6"	73.4 TON
85'	9	4	5'-0"	0"	2'-6"	75.7 TON
90'	9	4	5'-0"	0"	2'-6"	78.1 TON
95'	10	4	4'-6"	2'-3"	2'-3"	72.3 TON
100'	10	4	4'-6"	2'-3"	2'-3"	74.4 TON

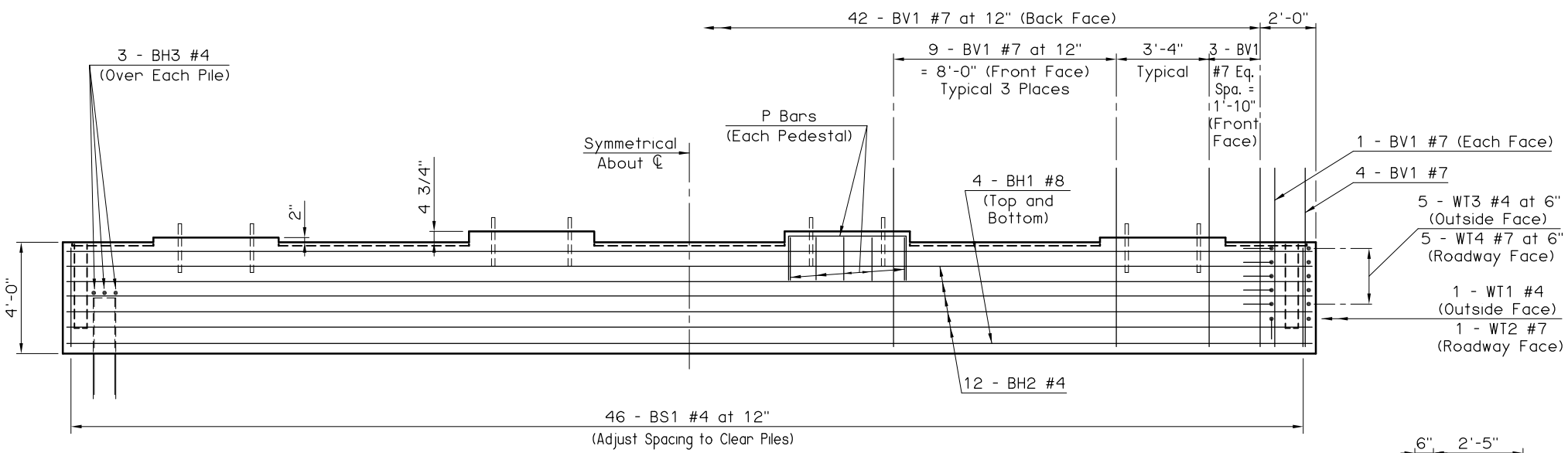

ELEVATION

All WT Wing reinforcing tied to Abutment Seat reinforcing must be in place prior to pouring Abutment Seat concrete.
Abutment Wings shall not be poured until the Abutment Diaphragm and Deck Slab have attained a strength of 3000 p.s.i.
For additional details, see
ABUTMENT DIAPHRAGM DETAILS
(SHEET 1 OF 2 AND SHEET 2 OF 2)
and ABUTMENT WING DETAILS
(SHEET 2 OF 2).

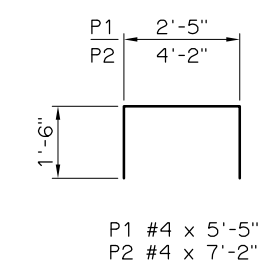

P1 #4 x 5'-5"
P2 #4 x 7'-2"

ABUTMENT SEAT BAR LIST						
	MARK	SIZE	NO.	FORM	LENGTH	LENGTH VARIATION
	EPOXY COATED REINFORCING					
	BV1	#7	87	STR.	6'-7"	
	BH1	#8	8	STR.	44'-8"	
	BH2	#4	12	STR.	44'-8"	
	BS1	#4	46	BNT.	12'-9"	
	P1	#4	20	BNT.	5'-5"	
	P2	#4	16	BNT.	7'-2"	
	WT1	#4	2	BNT.	5'-2"	
	WT2	#7	2	BNT.	9'-1"	
①	WT3	#4	10	STR.	6'-11" AVG.	3'-11" to 9'-11"
①	WT4	#7	10	BNT.	8'-1" AVG.	5'-1" to 11'-1"
	8 PILE ABUTMENT					
	BH3	#4	24	BNT.	3'-7"	
	9 PILE ABUTMENT					
	BH3	#4	27	BNT.	3'-7"	
	10 PILE ABUTMENT					
	BH3	#4	30	BNT.	3'-7"	

① 2 Sets of 5

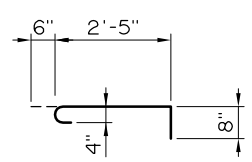

BH3 #4 x 3'-7"

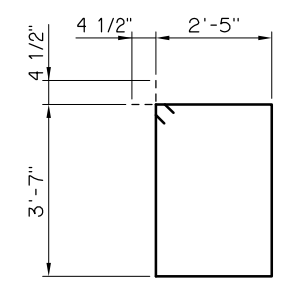

BS1 #4 x 12'-9"

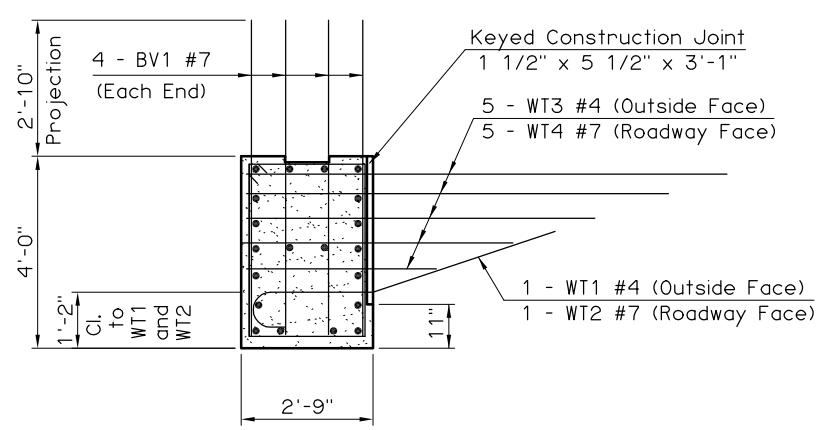

SECTION A-A

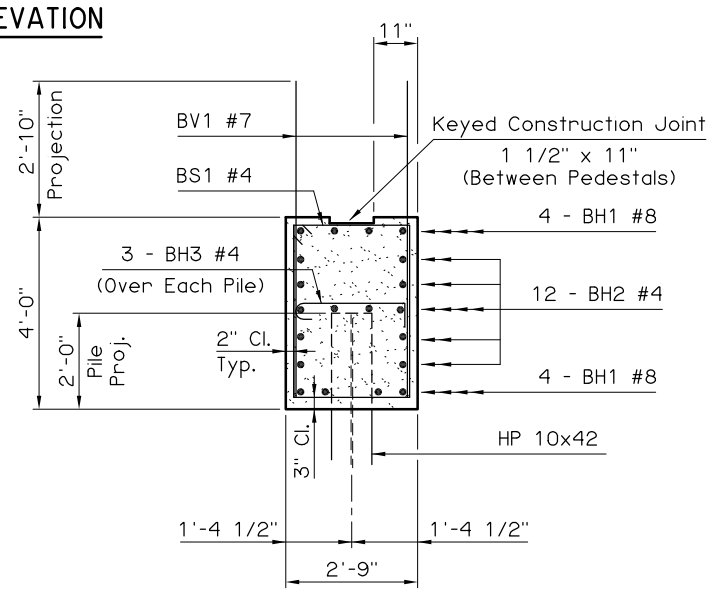

TYPICAL SECTION THRU SEAT

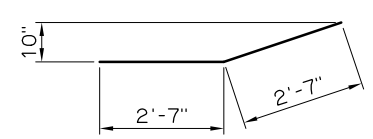

WT1 #4 x 5'-2"

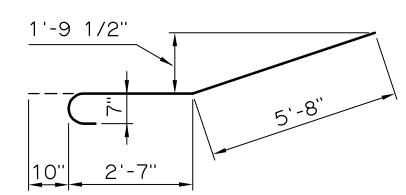

WT2 #7 x 9'-1"

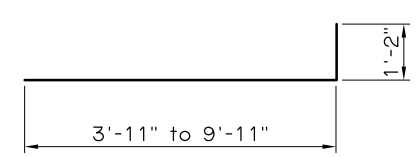

WT4 #7 x 8'-1" Avg.

APPROVED BY BRIDGE ENGINEER Robert J. Kucera DATE 8/29/03

OKLAHOMA DEPT. OF TRANSPORTATION
BRIDGE STANDARD (ENGLISH)

ABUTMENT DETAILS
TYPE IV P.C. BEAMS
INTEGRAL (SHEET 1 OF 2)

1999 SPECIFICATIONS	B40-I-ABUT-PC4-1	OOE

B-44E