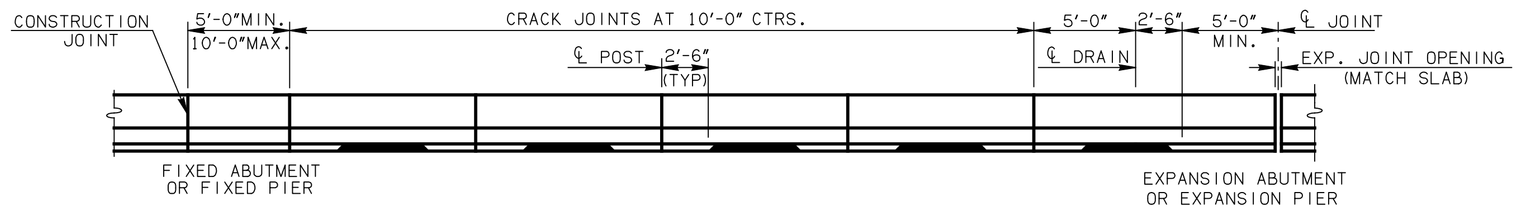

CONTROL CRACK JOINT LOCATIONS FOR SPANS WITH DRAINS

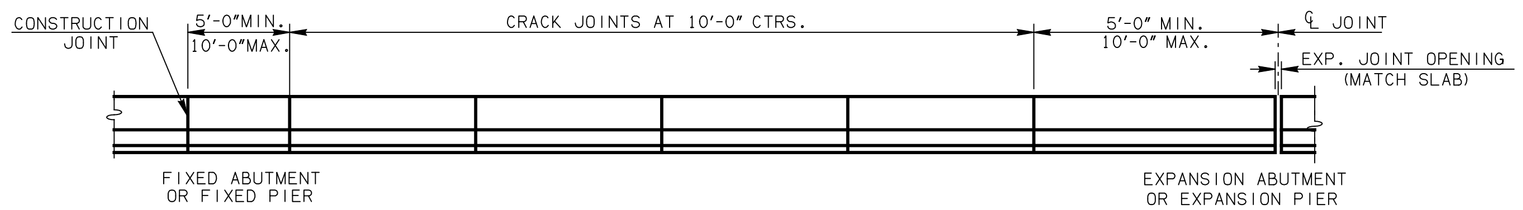

CONTROL CRACK JOINT LOCATIONS FOR SPANS WITHOUT DRAINS

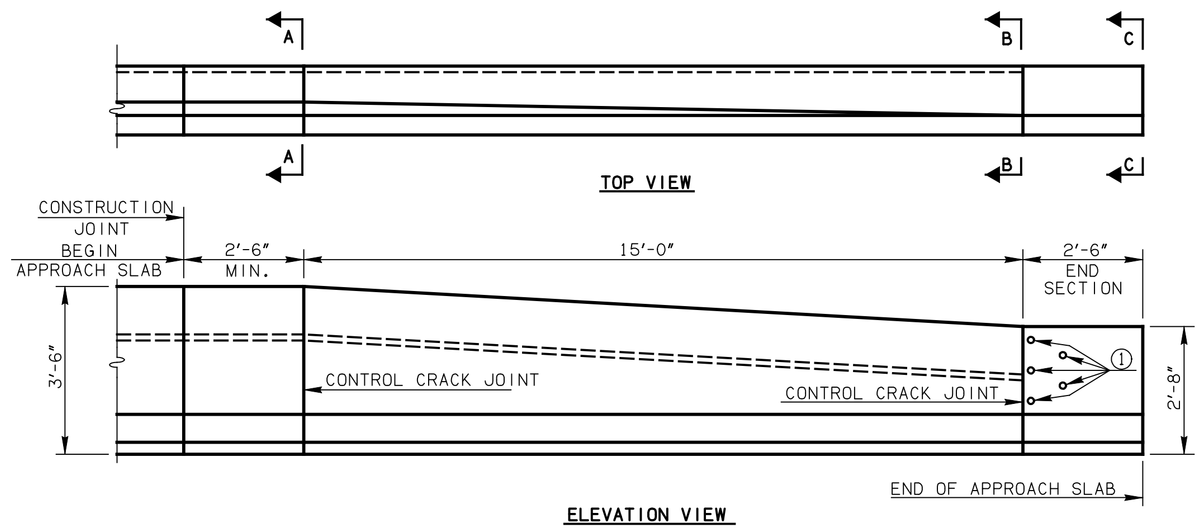

DETAILS OF F-SHAPE END TRANSITION AT APPROACH SLAB

1 NOTE: FOR GUARDRAIL HOLE DETAILS, SEE "ELEVATION OF GUARDRAIL CONNECTION HOLES"

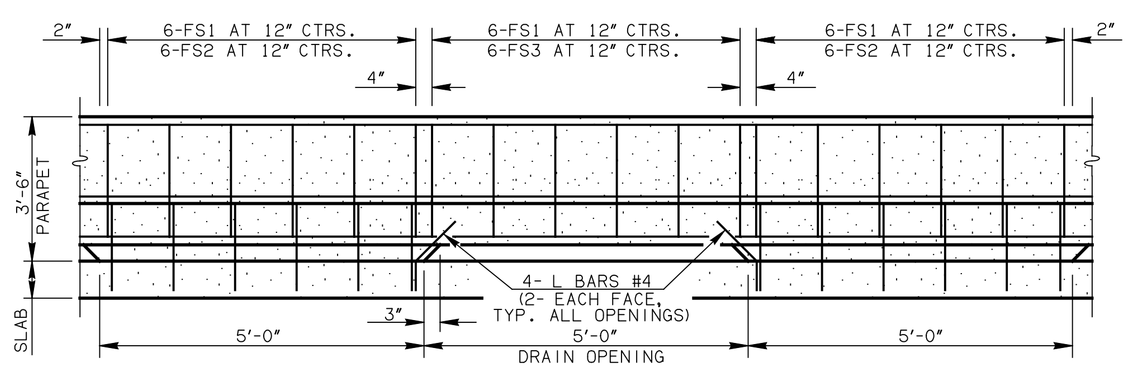

TYPICAL PARAPET REINFORCING SPACING (PARAPETS WITH DRAIN OPENINGS)

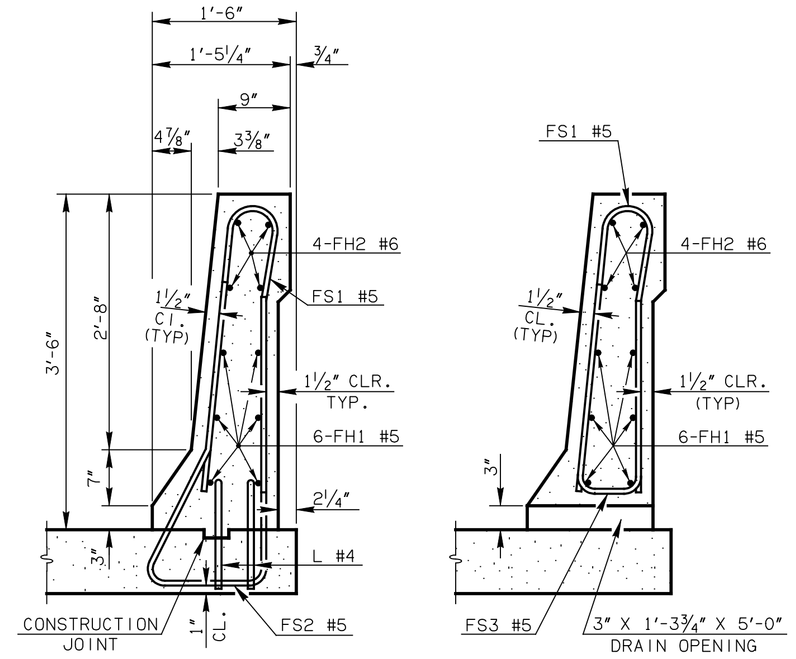

SECTION THRU POST AND SECTION A-A

SECTION THRU DRAIN OPENING

SECTION THRU BRIDGE PARAPET AT DECK SLAB

REVISIONS		
DESCRIPTION		DATE
1	REVISED DETAIL	MHK 12/17/04
2	REVISED NOTE	MHK 10/10/05

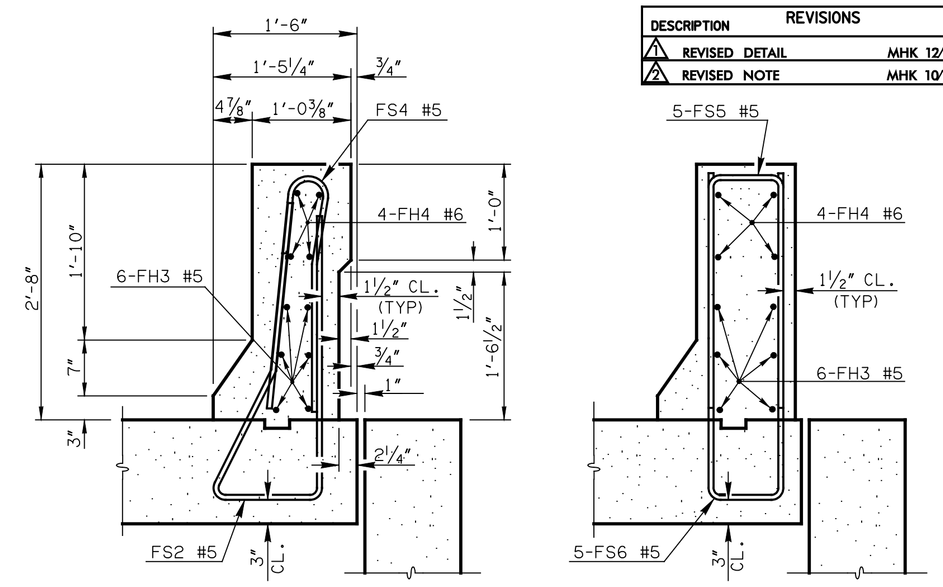

SECTION B-B THRU PARAPET AT TRANSITION END

SECTION C-C THRU PARAPET AT END SECTION

SECTION THRU BRIDGE PARAPET AT APPROACH SLAB

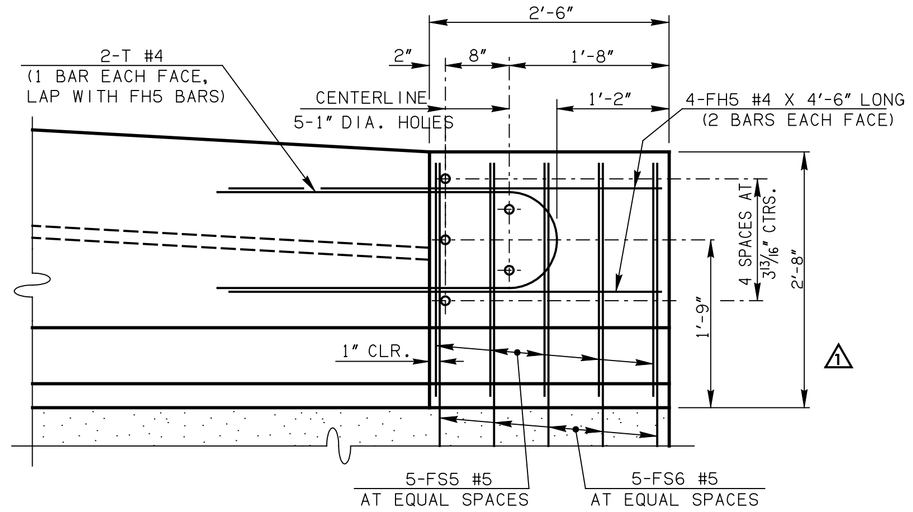

ELEVATION OF GUARDRAIL CONNECTION HOLES

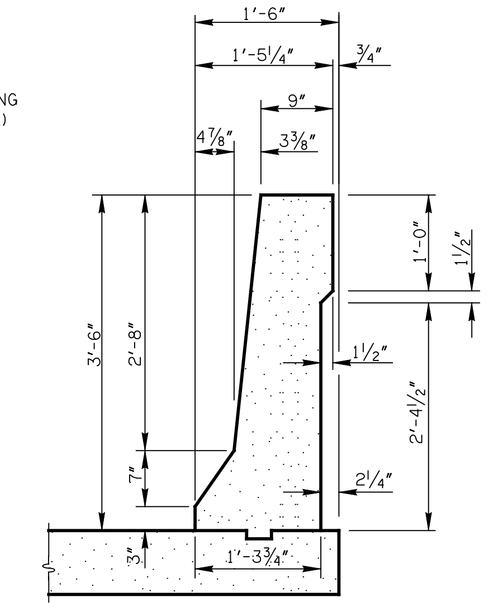

TYPICAL SECTION

SLOPED FACE CONCRETE PARAPET

CONSTRUCT THE SLOPED FACE CONCRETE PARAPET TO MEET THE REQUIREMENTS OF THE STANDARD SPECIFICATIONS FOR HIGHWAY CONSTRUCTION (ENGLISH), AS WELL AS THE FOLLOWING REQUIREMENTS.

CLASS AA CONCRETE:
CLASS AA CONCRETE SHALL BE USED IN THE F-SHAPED PARAPET. ALL COSTS OF CONCRETE TO BE INCLUDED IN THE PRICE BID PER LINEAR FOOT OF " 42" F-SHAPED PARAPET".

REINFORCING STEEL:
ALL REINFORCING STEEL USED IN THE F-SHAPED PARAPET SHALL BE EPOXY COATED. PLACE AND TIE ALL FS2 AND FS6 BARS BEFORE CONCRETE IS PLACED IN THE DECK SLAB OR APPROACH SLAB, AS APPLICABLE. THE WEIGHT OF THE FS2 , FS6 AND L BARS WILL BE MEASURED AND PAID FOR AS "EPOXY COATED REINFORCING STEEL". ALL OTHER REINFORCING STEEL IN THE PARAPET SHALL BE INCLUDED IN THE UNIT PRICE BID PER LINEAR FOOT OF " 42" F-SHAPED PARAPET ".

CONSTRUCTION JOINTS:
PLACE A CONSTRUCTION JOINT AT EACH FIXED ABUTMENT AND FIXED PIER, AND AT OTHER LOCATIONS AS SHOWN IN THE PLANS. PLACE 1/4 " THICK PREFORMED EXPANSION MATERIAL IN THE CONSTRUCTION JOINT IN ACCORDANCE WITH THE DETAILS SHOWN. DO NOT PLACE FH-BARS THROUGH A CONSTRUCTION JOINT UNLESS DIRECTED TO DO SO IN THE PLANS.

EXPANSION JOINTS:
AT EXPANSION JOINTS IN THE DECK SLAB OR APPROACH SLAB, MATCH THE WIDTH OF THE OPENING BETWEEN THE ENDS OF THE PARAPET WITH THE OPENING OF THE EXPANSION JOINT.

2 **CONTROL CRACK JOINTS:**
PROVIDE DOUBLE ¾" CHAMFERS OR ¾" DEEP SAWCUT IN ACCORDANCE WITH THE DETAILS SHOWN. FOR PARAPETS WITH DRAIN OPENINGS, PLACE THE CONTROL CRACK JOINTS IN THE CENTER OF THE 5'-0" SOLID PARAPET BETWEEN THE DRAIN OPENINGS. FOR PARAPETS WITHOUT DRAIN OPENINGS, PLACE THE CONTROL CRACK JOINTS AT 10'-0" SPACINGS. PLACE CONTROL CRACK JOINTS AT OTHER LOCATIONS AS SHOWN IN THE PLANS OR AS DIRECTED BY THE ENGINEER.

DRAIN OPENINGS:
PLACE A SERIES OF 5'-0" DRAIN OPENINGS IN THE PARAPET AT LOCATIONS SHOWN IN THE PLANS OR AS DIRECTED BY THE ENGINEER. CONSTRUCT THE DRAIN OPENINGS SUCH THAT THEY ARE 5'-0" IN LENGTH AND ALTERNATING WITH 5'-0" SOLID PARAPET LENGTHS.

GUARDRAIL CONNECTIONS
FORM OR DRILL HOLES, AS SHOWN, FOR THE CONNECTION OF THE THRIE-BEAM GUARDRAIL TERMINAL CONNECTORS (SPECIAL END SHOES) AT LOCATIONS SHOWN IN THE PLANS OR AS DIRECTED BY THE ENGINEER. IT IS THE RESPONSIBILITY OF THE BRIDGE CONTRACTOR TO PROVIDE THE HOLES. THE CONTRACTOR THAT INSTALLS THE GUARDRAIL WILL BE RESPONSIBLE FOR INSTALLING THE THRIE-BEAM GUARDRAIL TERMINAL CONNECTORS.

BASIS OF PAYMENT		
ITEM NO.	DESCRIPTION	UNIT
504(F)	42" F-SHAPED PARAPET	L.F.

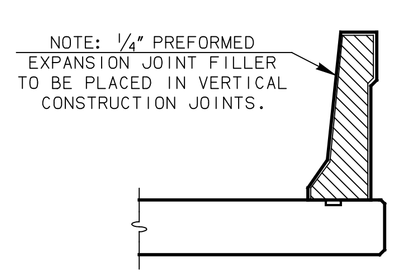

CONSTRUCTION JOINT

NOTE: TYPICAL AT FIXED PIER OR FIXED ABUTMENT

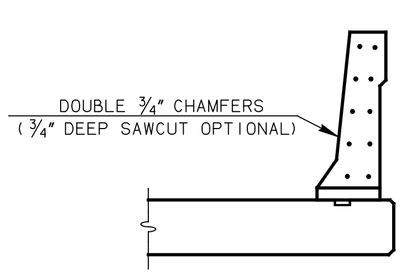

CONTROL CRACK JOINT

NOTE: ALL BARS SHALL BE CONTINUOUS THRU CONTROL CRACK JOINT

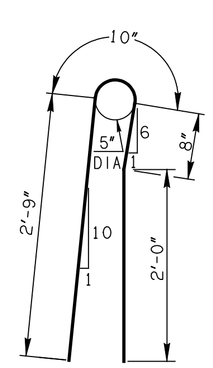

FS1 #5 X 6'-3"

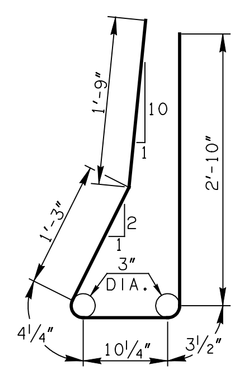

FS2 #5 X 7'-4"

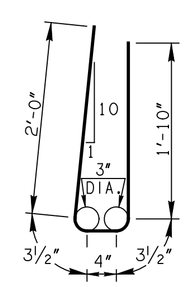

FS3 #5 X 4'-9"

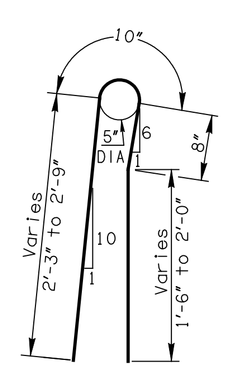

FS4 #5 X 5'-9" Avg.
Varies from 5'-3" to 6'-3"

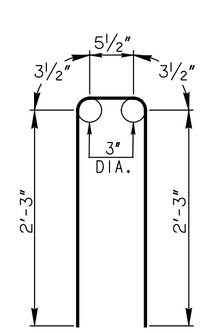

FS5 #5 X 5'-6½"

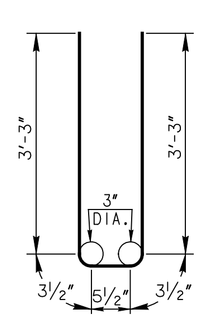

FS6 #5 X 7'-6½"

APPROVED BY BRIDGE ENGINEER Robert J. Rusch DATE 10-10-05

OKLAHOMA DEPT. OF TRANSPORTATION
BRIDGE STANDARD (ENGLISH)

42" F-SHAPED CONCRETE PARAPET

1999 SPECIFICATIONS | FSHP-42 | 02E
B-04E