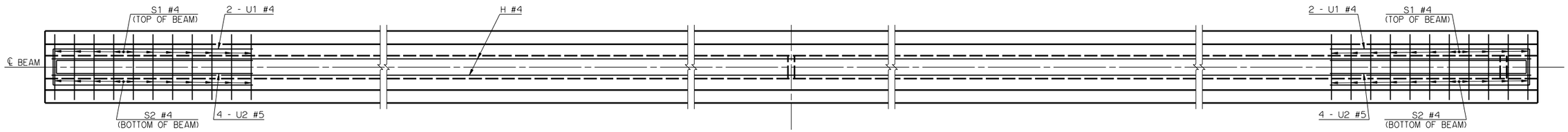

HALF PLAN AT ABUTMENT

C2 BARS, Z BARS, STRANDS AND ENCASED PLATES NOT SHOWN

HALF PLAN AT PIER

C1 BARS, C2 BARS, Z BARS, STRANDS, ELASTOMERIC PAD AND ENCASED PLATES NOT SHOWN

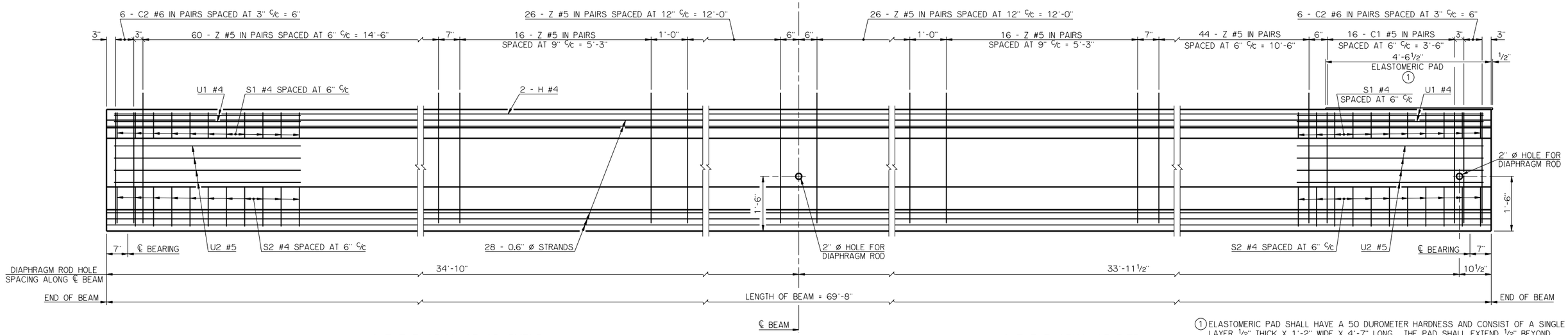

HALF ELEVATION AT ABUTMENT

ENCASED PLATES NOT SHOWN

HALF ELEVATION AT PIER

ENCASED PLATES NOT SHOWN

1 ELASTOMERIC PAD SHALL HAVE A 50 DUROMETER HARDNESS AND CONSIST OF A SINGLE LAYER ½" THICK X 1'-2" WIDE X 4'-7" LONG. THE PAD SHALL EXTEND ½" BEYOND THE END OF THE BEAM AS SHOWN. THE TOP SURFACE OF THE BEAM BELOW THE ELASTOMERIC PAD SHALL HAVE A SMOOTH FINISH.

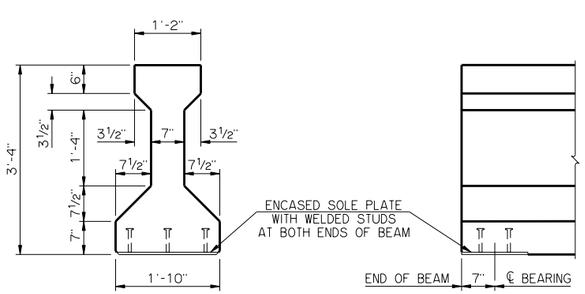

END VIEW

ELASTOMERIC PAD NOT SHOWN

END ELEVATION

ELASTOMERIC PAD NOT SHOWN

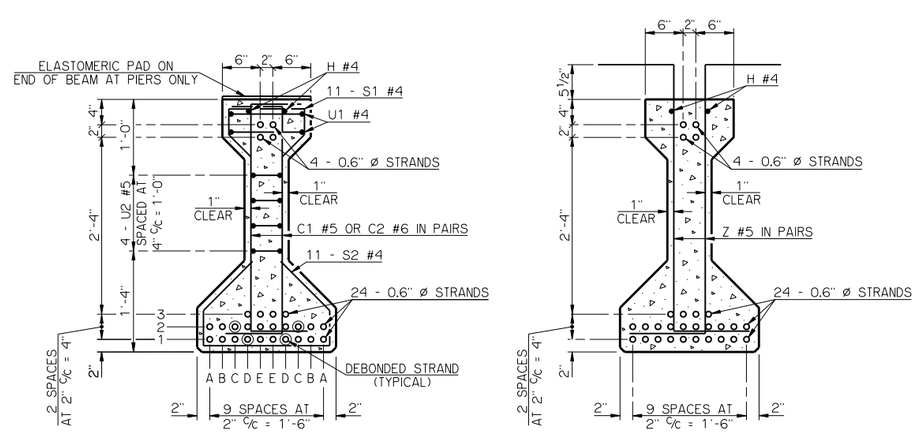

BEAM SECTIONS

(28 - 0.6" ø STRANDS)

DEBOND SCHEDULE	
DEBOND PAIR	DEBOND LENGTH FROM END OF BEAM
D1	3'-0"
C2	14'-0"

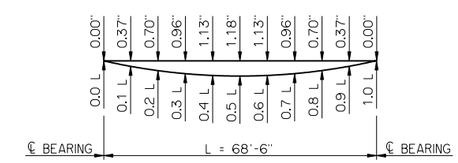

DEAD LOAD DEFLECTIONS

THE DEAD LOAD DEFLECTIONS SHOWN ABOVE AT THE TENTH POINTS ARE THE INITIAL THEORETICAL BEAM DEFLECTIONS DUE TO THE DIAPHRAGMS, 5 PSF DECK FORM ALLOWANCE, DECK SLAB, HAUNCH AND CONCRETE TRAFFIC RAIL (TR3). THE DEAD LOAD DEFLECTIONS SHALL BE ACCOUNTED FOR IN THE HAUNCH DEPTH CALCULATIONS.

MATERIAL PROPERTIES

THE COMPRESSIVE STRENGTH OF THE CONCRETE IN THE P.C. BEAM SHALL BE NO LESS THAN 6,300 PSI AT THE TIME OF TRANSFER OF THE PRESTRESSING FORCE AND NO LESS THAN 9,000 PSI AT 28 DAYS AFTER THE POURING OF THE CONCRETE.

THE TYPE OF PRESTRESSING STRANDS REQUIRED IN THE P.C. BEAM SHALL BE LOW RELAXATION 7-WIRE STRAND WITH A NOMINAL DIAMETER OF 0.6 INCHES AND AN ULTIMATE TENSILE STRENGTH OF 270 KSI.

LFD OPERATING RATING - HS 37.4

THE LFD OPERATING RATING SHOWN ABOVE IS FOR THE P.C. BEAM ONLY AND APPLIES ONLY TO THE P.C. BEAMS OF A BRIDGE CONSTRUCTED IN STRICT CONFORMANCE TO ALL RELEVANT DETAILS CONTAINED IN THE COMPLETE SET OF COUNTY BRIDGE STANDARDS AND TO THE ODOT STANDARD SPECIFICATIONS.

APPROVED BY BRIDGE ENGINEER Robert J. Nash DATE 10/16/08

OKLAHOMA DEPARTMENT OF TRANSPORTATION
COUNTY BRIDGE STANDARD (ENGLISH)

P.C. BEAM DETAILS
TYPE C - 70' SPAN

26' CLEAR ROADWAY - INTEGRAL - SKEWED 0°

1999 STANDARD SPECIFICATIONS | CB26-I-SKO-PCB-C-70 | 00E

CB-423E