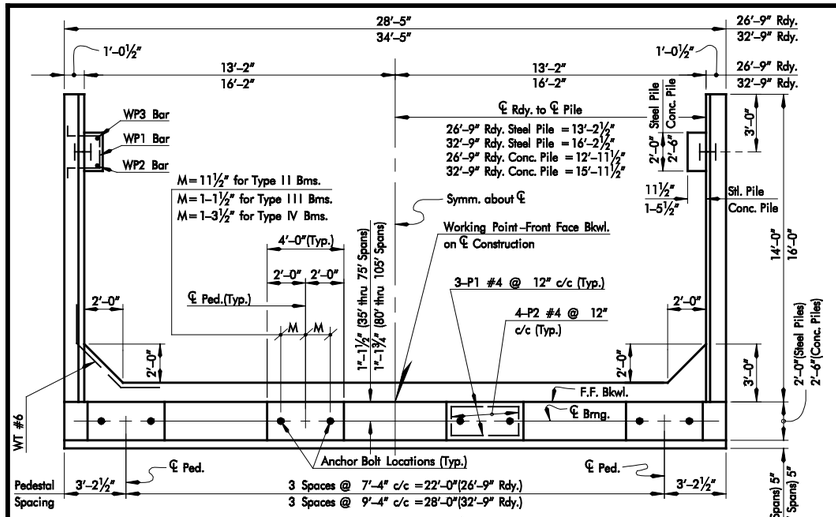

PLAN 3

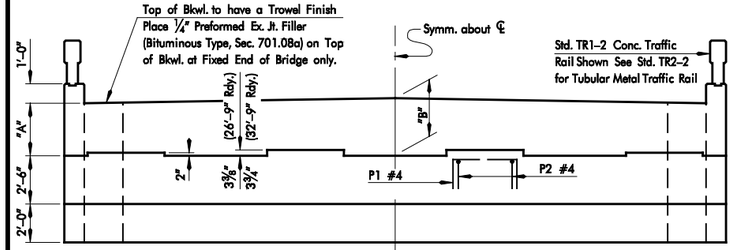

ELEVATION

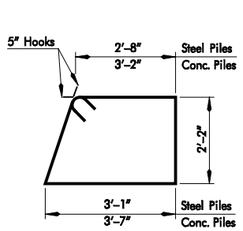

S #4 x 10'-11" (STEEL PILES)
S #4 x 11'-11" (CONC. PILES)

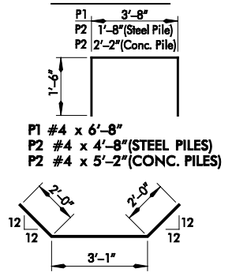

P1 #4 x 6'-8"
P2 #4 x 4'-8"(STEEL PILES)
P2 #4 x 5'-2"(CONC. PILES)

WT #6 x 7'-1"

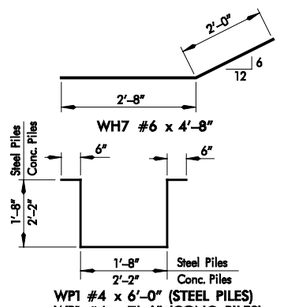

WP1 #4 x 6'-0" (STEEL PILES)
WP1 #4 x 7'-6" (CONC. PILES)

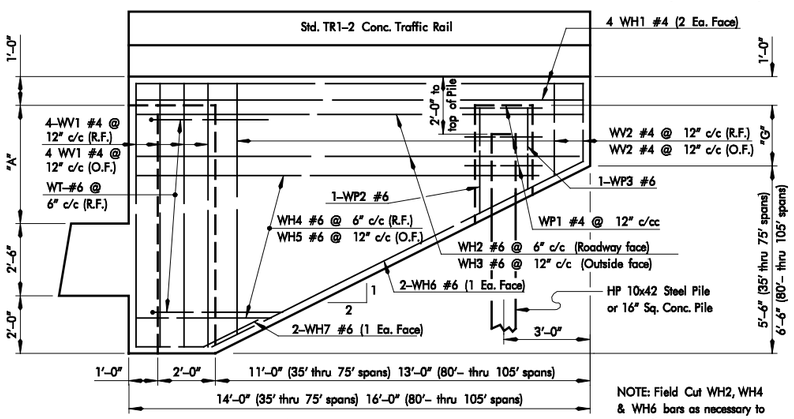

NOTE: Field Cut WH2, WH4 & WH6 bars as necessary to clear pile.

WING ELEVATION

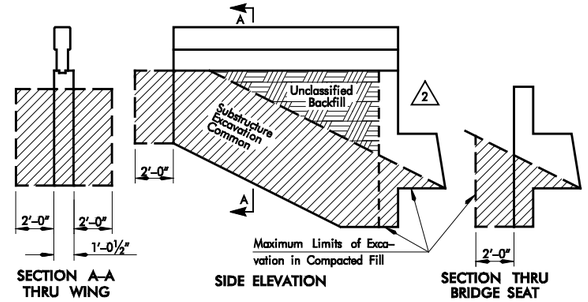

SECTION A-A THRU WING — SIDE ELEVATION — SECTION THRU BRIDGE SEAT

TYPICAL ABUTMENT EXCAVATION DIAGRAM

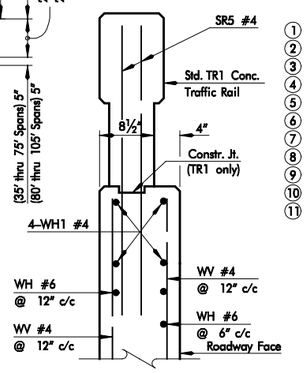

SECTION THRU WING

1. 7'-5" to 7'-7"
2. 4'-8" to 13'-0"
3. 2'-11" to 7'-11"
4. 3 Rebars per each bridge seat pile
5. 8'-2" to 8'-4"
6. 3'-8" to 13'-0"
7. 3'-8" to 8'-8"
8. 9'-2" to 9'-4"
9. 4'-10" to 14'-10"
10. 4'-10" to 13'-10"
11. 3'-5" to 9'-5"

	BAR LIST-ONE ABUTMENT 35' THRU 50' SPANS				
	MARK	NO.	SIZE	FORM	LENGTH
26'-9" Rdy.	B1	5	#9	Str.	28'-1"
32'-9" Rdy.	B1	5	#9	Str.	34'-1"
Steel Piles	B2	④	#4	Str.	2'-11"
Conc. Piles	B2	④	#4	Str.	3'-5"
26'-9" Rdy.	B3	4	#10	Str.	28'-1"
32'-9" Rdy.	B3	4	#10	Str.	34'-1"
26'-9" Rdy.	BH1	14	#4	Str.	28'-1"
32'-9" Rdy.	BH1	14	#4	Str.	34'-1"
26'-9" Rdy.	BV1	27	#4	Str.	7'-6"Avg.①
32'-9" Rdy.	BV1	33	#4	Str.	7'-6"Avg.①
26'-9" Rdy.	BV2	27	#5	Str.	7'-6"Avg.①
32'-9" Rdy.	BV2	33	#5	Str.	7'-6"Avg.①
	P1	12	#4	Bnt.	6'-8"
Steel Piles	P2	16	#4	Bnt.	4'-8"
Conc. Piles	P2	16	#4	Bnt.	5'-2"
26'-9" Rdy.(Steel Piles)	S	29	#4	Bnt.	10'-11"
26'-9" Rdy.(Conc. Piles)	S	29	#4	Bnt.	11'-11"
32'-9" Rdy.(Steel Piles)	S	35	#4	Bnt.	10'-11"
32'-9" Rdy.(Conc. Piles)	S	35	#4	Bnt.	11'-11"
	WH1	8	#4	Str.	13'-8"
	WH2	8	#6	Str.	13'-8"
	WH3	4	#6	Str.	13'-8"
	WH4	18	#6	Str.	8'-4"Avg.⑥
	WH5	10	#6	Str.	8'-10"Avg.②
	WH6	4	#6	Str.	12'-0"
	WH7	4	#6	Bnt.	4'-8"
Steel Piles	WP1	8	#4	Bnt.	6'-0"
Conc. Piles	WP1	8	#4	Bnt.	7'-6"
	WP2	2	#6	Str.	3'-9"
	WP3	2	#6	Str.	2'-11"
	WT	26	#6	Bnt.	7'-1"
	WV1	16	#4	Str.	8'-4"
	WV2	44	#4	Str.	5'-5"Avg.③

	BAR LIST-ONE ABUTMENT 55' THRU 75' SPANS				
	MARK	NO.	SIZE	FORM	LENGTH
26'-9" Rdy.	B1	5	#9	Str.	28'-1"
32'-9" Rdy.	B1	5	#9	Str.	34'-1"
Steel Piles	B2	④	#4	Str.	2'-11"
Conc. Piles	B2	④	#4	Str.	3'-5"
26'-9" Rdy.	B3	4	#10	Str.	28'-1"
32'-9" Rdy.	B3	4	#10	Str.	34'-1"
26'-9" Rdy.	BH1	14	#4	Str.	28'-1"
32'-9" Rdy.	BH1	14	#4	Str.	34'-1"
26'-9" Rdy.	BV1	27	#4	Str.	8'-3"Avg.⑤
32'-9" Rdy.	BV1	33	#4	Str.	8'-3"Avg.⑤
26'-9" Rdy.	BV2	27	#5	Str.	8'-3"Avg.⑤
32'-9" Rdy.	BV2	33	#5	Str.	8'-3"Avg.⑤
	P1	12	#4	Bnt.	6'-8"
Steel Piles	P2	16	#4	Bnt.	4'-8"
Conc. Piles	P2	16	#4	Bnt.	5'-2"
26'-9" Rdy.(Steel Piles)	S	29	#4	Bnt.	10'-11"
26'-9" Rdy.(Conc. Piles)	S	29	#4	Bnt.	11'-11"
32'-9" Rdy.(Steel Piles)	S	35	#4	Bnt.	10'-11"
32'-9" Rdy.(Conc. Piles)	S	35	#4	Bnt.	11'-11"
	WH1	8	#4	Str.	13'-8"
	WH2	10	#6	Str.	13'-8"
	WH3	6	#6	Str.	13'-8"
	WH4	20	#6	Str.	8'-4"Avg.⑥
	WH5	10	#6	Str.	8'-10"Avg.②
	WH6	4	#6	Str.	12'-0"
	WH7	4	#6	Bnt.	4'-8"
Steel Piles	WP1	8	#4	Bnt.	6'-0"
Conc. Piles	WP1	8	#4	Bnt.	7'-6"
	WP2	2	#6	Str.	4'-6"
	WP3	2	#6	Str.	3'-8"
	WT	30	#6	Bnt.	7'-1"
	WV1	16	#4	Str.	9'-2"
	WV2	44	#4	Str.	6'-2"Avg.⑦

	BAR LIST-ONE ABUTMENT 80' THRU 105' SPANS				
	MARK	NO.	SIZE	FORM	LENGTH
26'-9" Rdy.	B1	5	#9	Str.	28'-1"
32'-9" Rdy.	B1	5	#9	Str.	34'-1"
Steel Piles	B2	④	#4	Str.	2'-11"
Conc. Piles	B2	④	#4	Str.	3'-5"
26'-9" Rdy.	B3	4	#10	Str.	28'-1"
32'-9" Rdy.	B3	4	#10	Str.	34'-1"
26'-9" Rdy.	BH1	16	#4	Str.	28'-1"
32'-9" Rdy.	BH1	16	#4	Str.	34'-1"
26'-9" Rdy.	BV1	27	#4	Str.	9'-3"Avg.⑧
32'-9" Rdy.	BV1	33	#4	Str.	9'-3"Avg.⑧
26'-9" Rdy.	BV2	27	#5	Str.	9'-3"Avg.⑧
32'-9" Rdy.	BV2	33	#5	Str.	9'-3"Avg.⑧
	P1	12	#4	Bnt.	6'-8"
Steel Piles	P2	16	#4	Bnt.	4'-8"
Conc. Piles	P2	16	#4	Bnt.	5'-2"
26'-9" Rdy.(Steel Piles)	S	29	#4	Bnt.	10'-11"
26'-9" Rdy.(Conc. Piles)	S	29	#4	Bnt.	11'-11"
32'-9" Rdy.(Steel Piles)	S	35	#4	Bnt.	10'-11"
32'-9" Rdy.(Conc. Piles)	S	35	#4	Bnt.	11'-11"
	WH1	8	#4	Str.	15'-8"
	WH2	10	#6	Str.	15'-8"
	WH3	6	#6	Str.	15'-8"
	WH4	22	#6	Str.	9'-10"Avg.⑨
	WH5	12	#6	Str.	9'-4"Avg.⑩
	WH6	4	#6	Str.	14'-4"
	WH7	4	#6	Bnt.	4'-8"
Steel Piles	WP1	8	#4	Bnt.	6'-0"
Conc. Piles	WP1	8	#4	Bnt.	7'-6"
	WP2	2	#6	Str.	4'-3"
	WP3	2	#6	Str.	3'-5"
	WT	32	#6	Bnt.	7'-1"
	WV1	16	#4	Str.	9'-11"
	WV2	52	#4	Str.	6'-5"Avg.⑪

1. Revise Pile Diagram 3-23-00
2. Revise Excav. Diagram Remove Notes 7-28-00
3. Revise Span lengths, Pay Item 2-26-01

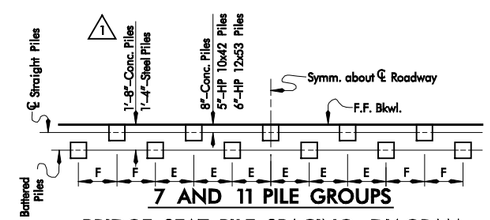

7 AND 11 PILE GROUPS
BRIDGE SEAT PILE SPACING DIAGRAM
(CONCRETE OR STEEL PILES)

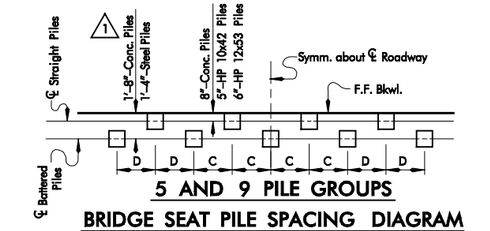

5 AND 9 PILE GROUPS
BRIDGE SEAT PILE SPACING DIAGRAM
(CONCRETE OR STEEL PILES)

FOUNDATION PILE AND LOAD SCHEDULE												
SPAN LENGTH	26'-9" ROADWAY						32'-9" ROADWAY					
	CONC. PILES		HP 10 x 42 PILES		HP 12 x 53 PILES		CONC. PILES		HP 10 x 42 PILES		HP 12 x 53 PILES	
	NO. BRIDGE SEAT PILES	AVG. PILE LOAD TON/PILE	NO. BRIDGE SEAT PILES	AVG. PILE LOAD TON/PILE	NO. BRIDGE SEAT PILES	AVG. PILE LOAD TON/PILE	NO. BRIDGE SEAT PILES	AVG. PILE LOAD TON/PILE	NO. BRIDGE SEAT PILES	AVG. PILE LOAD TON/PILE	NO. BRIDGE SEAT PILES	AVG. PILE LOAD TON/PILE
35'	5	28.8	5	28.8	—	—	7	22.8	5	31.9	—	—
40'	7	21.7	5	30.4	—	—	7	24.1	5	33.7	—	—
45	7	22.9	5	32.0	—	—	7	25.3	5	35.4	—	—
50'	7	23.9	5	33.5	—	—	7	26.6	5	37.2	—	—
55'	7	26.9	5	37.6	—	—	7	29.7	5	41.6	—	—
60'	7	27.9	5	39.1	—	—	9	24.1	—	—	5	43.4
65'	7	29.1	5	40.8	—	—	9	25.1	—	—	5	45.2
70'	9	23.5	—	—	5	42.3	9	26.1	—	—	5	46.9
75'	9	26.4	—	—	5	47.2	9	29.2	7	37.5	—	—
80'	9	27.5	7	35.8	—	—	11	24.8	7	38.6	—	—
85'	9	28.4	7	37.1	—	—	11	25.6	7	40.0	—	—
90'	9	29.4	7	38.3	—	—	11	26.5	7	41.3	—	—
95'	11	24.9	7	39.5	—	—	11	27.4	—	—	7	42.7
100'	11	25.6	7	40.8	—	—	11	28.3	—	—	7	44.0
105'	11	26.3	—	—	7	42.0	11	29.2	—	—	7	45.3

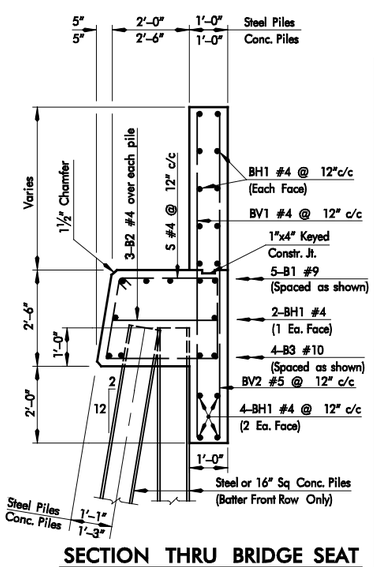

SECTION THRU BRIDGE SEAT

QUANTITIES – ONE ABUTMENT					
	SPAN	CLASS"A" CONC. C.Y.	REINF. STEEL LBS.	SUBSTR. EXC. COM. C.Y.	UNCL. BACKFILL C.Y.	CONC. TRAFFIC RAIL
26'-9" ROADWAY	35'	22.8	3,240	40	25	28
	40'	22.8	3,240	40	25	28
	45'	22.8	3,240	40	25	28
	50'	22.8	3,240	40	25	28
	55'	24.4	3,460	39	32	28
	60'	24.4	3,460	39	32	28
	65'	24.4	3,460	39	32	28
	70'	24.4	3,460	39	32	28
	75'	24.4	3,460	39	32	28
	80'	26.9	3,800	42	41	32
	85'	26.9	3,800	42	41	32
	90'	26.9	3,800	42	41	32
	95'	26.9	3,800	42	41	32
	100'	26.9	3,800	42	41	32
	105'	26.9	3,800	42	41	32
32'-9" ROADWAY	35'	26.0	3,630	40	31	28
	40'	26.0	3,630	40	31	28
	45'	26.0	3,630	40	31	28
	50'	26.0	3,630	40	31	28
	55'	27.8	3,850	42	40	28
	60'	27.8	3,850	42	40	28
	65'	27.8	3,850	42	40	28
	70'	27.8	3,850	42	40	28
	75'	27.8	3,850	42	40	28
	80'	30.4	4,210	45	51	32
	85'	30.4	4,210	45	51	32
	90'	30.4	4,210	45	51	32
	95'	30.4	4,210	45	51	32
	100'	30.4	4,210	45	51	32
	105'	30.4	4,210	45	51	32

NOTE: Quantities are for Abutments with Steel Piles

DIMENSION SCHEDULE									
	SPAN LENGTH	"A"	"B"	"C"	"D"	"E"	"F"	"G"	SPAN LENGTH
26'-9" ROADWAY (Ⓐ 3.75' for Conc. Piles & 7.50' for Steel Piles; Ⓑ 3.75' for Conc. Piles & 0.00' for Steel Piles; Ⓒ 3.00' for Conc. Piles & 5.00' for Steel Piles; Ⓓ 3.00' for Conc. Piles & 0.00' for Steel Piles)	35'	3'-2⅞"	3'-5⅜"	6.00'	0	4.00'	0	2'-2⅞"	35'
	40'								40'
	45'								45'
	50'								50'
	55'	3'-11⅞"	4'-2⅜"					2'-11⅞"	55'
	60'								60'
	65'								65'
	70'			Ⓐ	Ⓑ	0.00'			70'
	75'								75'
	80'	4'-8⅞"	4'-11⅜"	3.00'	3.00'	4.00'		2'-8⅞"	80'
	85'								85'
	90'								90'
	95'			0	0	0	0		95'
	100'						Ⓓ	Ⓒ	100'
	105'								105'
32'-9" ROADWAY (Ⓐ 3.00' for Conc. Piles & 6.00' for Steel Piles; Ⓑ 3.00' for Conc. Piles & 0.00' for Steel Piles; Ⓒ 2.50' for Conc. Piles & 4.00' for Steel Piles; Ⓓ 2.50' for Conc. Piles & 0.00' for Steel Piles)	35'	3'-2⅞"	3'-5⅞"	7.50'	0	5.00'	0	2'-2⅞"	35'
	40'								40'
	45'								45'
	50'								50'
	55'	3'-11⅞"	4'-2⅞"					2'-11⅞"	55'
	60'								60'
	65'			Ⓔ	Ⓕ	0			65'
	70'								70'
	75'			3.75'	3.75'	5.00'			75'
	80'	4'-8⅞"	4'-11⅞"	0	0	Ⓖ	Ⓗ	2'-8⅞"	80'
	85'								85'
	90'								90'
	95'								95'
	100'								100'
	105'								105'

ADJUSTMENTS TO QUANTITIES SHOWN

26'-9" ROADWAY

Add 2.0 C.Y. Class"A" Concrete when Conc. Piles are used.
Add 30 Lbs. Reinforcing when Conc. Piles are used.
Add 3.0 C.Y. Substructure Excavation Common when Conc. Piles are used.
Add "B2" & "SR5" Reinforcing to quantities shown.

32'-9" ROADWAY

Add 2.2 C.Y. Class"A" Concrete when Conc. Piles are used.
Add 35 Lbs. Reinforcing when Conc. Piles are used.
Add 3.0 C.Y. Substructure Excavation Common when Conc. Piles are used.
Add 55 Lbs. Reinforcing for Expansion Abutments.
Add "B2" & "SR5" Reinforcing to quantities shown.

NOTES:

All bar bends are out to out.
All exposed edges to have ¾" chamfer unless otherwise shown or noted. All chamfer strips shall be sized lumber.
All reinforcing steel shall have a 2" clearance unless otherwise shown or noted.
All traffic rail bars shall be in place before wingwalls are poured.

APPROVED BY BRIDGE ENGINEER: DATE:

OKLAHOMA DEPARTMENT OF TRANSPORTATION
COUNTY BRIDGE STANDARD (ENGLISH)

ABUTMENTS FOR P.C. BEAMS

1999 SPECIFICATIONS | APCB1-2 | 03E

CB-24E